General Information

Table of Contents

Before Servicing 1-2
Model Identification 1-4
General Specifications 1-6
Periodic Maintenance Chart 1-8
Technical Information – Coasting Enricher 1-9
Technical Information – Connecting Rod Big End Nut Tightening 1-11
Technical Information – Maintenance Free Battery 1-14
Technical Information – K-TRIC (Kawasaki Throttle Responsive Ignition Control) 1-16
Torque and Locking Agent 1-17
Special Tools and Sealant 1-21
Cable, Wire, and Hose Routing 1-27

Before Servicing

Before starting to service a motorcycle, careful reading of the applicable section is recommended to eliminate unnecessary work. Photographs, diagrams, notes, cautions, warnings, and detailed descriptions have been included wherever necessary. Nevertheless, even a detailed account has limitations, a certain amount of basic knowledge is also required for successful work.

Especially note the following:

(1) Dirt

Before removal and disassembly, clean the motorcycle. Any dirt entering the engine or other parts will work as an abrasive and shorten the life of the motorcycle. For the same reason, before installing a new part, clean off any dust or metal filings.

(2) Battery Ground

Remove the ground (−) lead from the battery before performing any disassembly operations on the motorcycle. This prevents: (a) the possibility of accidentally turning the engine over while partially disassembled. (b) sparks at electrical connections which will occur when they are disconnected. (c) damage to electrical parts.

(3) Installation, Assembly

Generally, installation or assembly is the reverse of removal or disassembly. But if this Service Manual has installation or assembly procedures, follow them. Note parts locations and cable, wire, and hose routing during removal or disassembly so they can be installed or assembled in the same way. It is preferable to mark and record the locations and routing as much as possible.

(4) Tightening Sequence

Generally, when installing a part with several bolts, nuts, or screws, start them all in their holes and tighten them to a snug fit. Then tighten them evenly in a cross pattern. This is to avoid distortion of the part and/or causing gas or oil leakage. Conversely when loosening the bolts, nuts, or screws, first loosen all of them by about a quarter turn and then remove them. Where there is a tightening sequence indication in this Service Manual, the bolts, nuts, or screws must be tightened in the order and method indicated.

(5) Torque

When torque values are given in this Service Manual, use them. Either too little or too much torque may lead to serious damage. Use a good quality, reliable torque wrench.

(6) Force

Common sense should dictate how much force is necessary in assembly and disassembly. If a part seems especially difficult to remove or install, stop and examine what may be causing the problem. Whenever tapping is necessary, tap lightly using a wooden or plastic-faced mallet. Use an impact driver for screws (particularly for the removal of screws held by a locking agent) in order to avoid damaging the screw heads.

(7) Edges

Watch for sharp edges, especially during major engine disassembly and assembly. Protect your hands with gloves or a piece of thick cloth when lifting the engine or turning it over.

(8) High-Flash Point Solvent

A high-flash point solvent is recommended to reduce fire danger. A commercial solvent commonly available in North America is Stoddard solvent (generic name). Always follow manufacturer and container directions regarding the use of any solvent.

(9) Gasket, O-Ring

Do not reuse a gasket or O-ring once it has been in service. The mating surfaces around the gasket should be free of foreign matter and perfectly smooth to avoid oil or compression leaks.

(10) Liquid Gasket, Non-Permanent Locking Agent

Follow manufacturer's directions for cleaning and preparing surfaces where these compounds will be used. Apply sparingly. Excessive amounts may block engine oil passages and cause serious damage. An example of a non-permanent locking agent commonly available in North America is Loctite Lock'n Seal (Blue).

(11) Press

A part installed using a press or driver, such as a wheel bearing, should first be coated with oil on its outer or inner circumference so that it will go into place smoothly.

(12) Ball Bearing and Needle Bearing

Do not remove a ball bearing or a needle bearing unless it is absolutely necessary. Replace any ball or needle bearings that were removed with new ones, as removal generally damages bearings. Install bearings with the marked side facing out applying pressure evenly with a suitable driver. Only press on the race that forms the press fit with the base component to avoid damaging the bearings. This prevents severe stress on the balls or needles and races, and prevent races and balls or needles from being dented. Press a ball bearing until it stops at the stops in the hole or on the shaft.

(13) Oil Seal and Grease Seal

Replace any oil or grease seals that were removed with new ones, as removal generally damages seals.

When pressing in a seal which has manufacturer's marks, press it in with the marks facing out. Seals should be pressed into place using a suitable driver, which contacts evenly with the side of seal, until the face of the seal is even with the end of the hole. Before a shaft passes through a seal, apply a little high temperature grease on the lips to reduce rubber to metal friction.

(14) Circlip, Retaining Ring, and Cotter Pin

Replace any circlips, retaining rings, and cotter pins that were removed with new ones, as removal weakens and deforms them. When installing circlips and retaining rings, take care to compress or expand them only enough to install them and no more.

(15) Lubrication

Engine wear is generally at its maximum while the engine is warming up and before all the rubbing surfaces have an adequate lubricative film. During assembly, oil or grease (whichever is more suitable) should be applied to any rubbing surface which has lost its lubricative film. Old grease and dirty oil should be cleaned off. Deteriorated grease has lost its lubricative quality and may contain abrasive foreign particles.

Don't use just any oil or grease. Some oils and greases in particular should be used only in certain applications and may be harmful if used in an application for which they are not intended. This manual makes reference to molybdenum disulfide grease (MoS_2) in the assembly of certain engine and chassis parts. Always check manufacturer recommendations before using such special lubricants.

(16) Electrical Wires

All the electrical wires are either single-color or two-color and, with only a few exceptions, must be connected to wires of the same color. On any of the two-color wires there is a greater amount of one color and a lesser amount of a second color, so a two-color wire is identified by first the primary color and then the secondary color. For example, a yellow wire with thin red stripes is referred to as a "yellow/red" wire; it would be a "red/yellow" wire if the colors were reversed to make red the main color.

Wire (cross-section)	Name of Wire Color
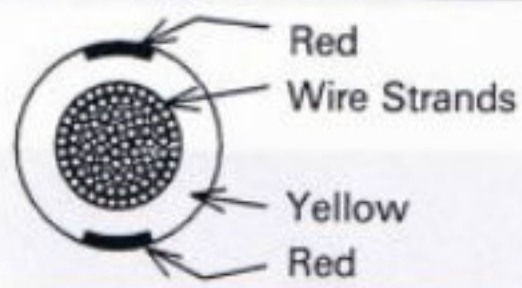	Yellow/Red

(17) Replacement Parts

When there is a replacement instruction, replace these parts with new ones every time they are removed. These replacement parts will be damaged or lose their original function once removed.

(18) Inspection

When parts have been disassembled, visually inspect these parts for the following conditions or other damage. If there is any doubt as to the condition of them, replace them with new ones.

Abrasion	Crack	Hardening	Warp
Bent	Dent	Scratch	Wear
Color change	Deterioration	Seizure	

(19) Specifications

Specification terms are defined as follows:

"Standards": show dimensions or performances which brand-new parts or systems have.

"Service Limits": indicate the usable limits. If the measurement shows excessive wear or deteriorated performance, replace the damaged parts.

ZR1100-C1 Left Side View:

ZR1100-C1 Right Side View:

ZR1100-D1 Left Side View:

ZR1100-D1 Right Side View:

General Specifications

Items		ZR1100-C1/D1, C2/D2, C3/D3
Dimensions:		
Overall length		2 120 mm, (FG)(GR)(NR)(SD)(ST) 2 200 mm
Overall width		780 mm
Overall height		1 150 mm, *1 085 mm
Wheelbase		1 450 mm
Road clearance		135 mm
Seat height		790 mm
Dry mass		222 kg, *221 kg
Curb mass:	Front	121 kg, *120 kg
	Rear	124 kg
Fuel tank capacity		20 L
Performance:		
Minimum turning radius		2.6 m
Engine:		
Type		4-stroke, DOHC, 4-cylinder
Cooling system		Liquid-cooled
Bore and stroke		76.0 x 58.0 mm
Displacement		1 052 mL
Compression ratio		10.1
Maximum horsepower		78 kW (106 PS) @8 700 r/min (rpm), (AR)(FG) 72 kW (98 PS) @8 500 r/min (rpm), (SD) 63 kW (86 PS) @8 000 r/min (rpm), (ST) 39 kW (53 PS) @6 000 r/min (rpm),
Maximum torque		98 N-m(10.0 kg-m, 72 ft-lb) @7 000 r/min(rpm), (AR)(FG) 95 N-m (9.7 kg-m, 70 ft-lb) @6 000 r/min (rpm), (FR)(UK) –, (SD) 93 N-m (9.5 kg-m, 69 ft-lb) @4 500 r/min (rpm), (ST) 77 N-m (7.9 kg-m, 57 ft-lb) @2 500 r/min (rpm)
Carburetion system		Carburetors, Keihin CVK36 × 4
Starting system		Electric starter
Ignition system		Battery and coil (transistorized)
Timing advance		Electronically advanced (digital)
Ignition timing		From 10° BTDC @1 100 r/min (rpm) to 35° BTDC @7 700 r/min (rpm), (ST) From 10° BTDC @1 300 r/min (rpm) to 35° BTDC @7 700 r/min (rpm)
Spark plugs		NGK CR9EK or ND U27ETR
Cylinder numbering method		Left to right, 1-2-3-4
Firing order		1-2-4-3
Valve timing:		
Inlet	Open	27°
	Close	47°
	Duration	254°
Exhaust	Open	45°
	Close	25°
	Duration	250°

Items	ZR1100-C1/D1, C2/D2, C3/D3
Lubrication system	Forced lubrication (wet sump)
Engine oil:	
Grade	SE,SF, or SG class
Viscosity	SAE10W-40, 10W-50, 20W-40, or 20W-50
Capacity	3.5 L
Drive Train:	
Primary reduction system:	
Type	Gear
Reduction ratio	1.637 (95/58)
Clutch type	Wet multi disc
Transmission:	
Type	5-speed, constant mesh, return shift
Gear ratios: 1st	2.733 (41/15)
2nd	1.947 (37/19)
3rd	1.478 (34/23)
4th	1.192 (31/26)
5th	1.035 (29/28)
Final drive system:	
Type	Chain drive
Reduction ratio	2.647 (45/17)
Overall drive ratio	4.490 @Top gear
Frame:	
Type	Tubular, double cradle
Caster (rake angle)	25°
Trail	104 mm
Front tire: Type	Tubeless
Size	120/70 ZR17(58W)
Rear tire: Type	Tubeless
Size	170/60 ZR17(72W)
Front suspension: Type	Telescopic fork
Wheel travel	125 mm
Rear suspension: Type	Swingarm
Wheel travel	118 mm
Brake type: Front	Dual discs
Rear	Single disc
Electrical Equipment:	
Battery	12 V 12 Ah
Headlight: Type	Semi-sealed beam
Bulb	12V60/55W (quartz-halogen)
Tail/brake light	12 V 5/21 W × 2, (US, CN) 12 V 8/27 W x 2
Alternator: Type	Three-phase AC
Rated output	28.6 A /14 V@6 000 r/min (rpm)

Specifications are subject to change without notice, and may not apply to every country.

(AR): Austria (SD): Sweden (GR): Greek
(ST) : Switzerland (FG): Germany (NR): Norway

Periodic Maintenance Chart

The scheduled maintenance must be done in accordance with this chart to keep the motorcycle in good running condition. **The initial maintenance is vitally important and must not be neglected.**

FREQUENCY / OPERATION	Whichever comes first → Every	*ODOMETER READING 1 000 km (600 mile)	6 000 km (4 000 mile)	12 000 km (7 500 mile)	18 000 km (12 000 mile)	24 000 km (15 000 mile)	30 000 km (20 000 mile)	36 000 km (24 000 mile)
Spark plug – clean and gap †			●	●	●	●	●	●
Valve clearance – check †				●		●		●
Air suction valve – check †			●	●	●	●	●	●
Air cleaner element – clean † #				●		●		●
Throttle grip play – check †		●		●		●		●
Idle speed – check †		●		●		●		●
Carburetor synchronization – check †				●		●		●
Engine oil – change #	6 months	●	●	●	●	●	●	●
Oil filter – replace		●		●		●		●
Drive chain wear – check † #		●	●	●	●	●	●	●
Brake pad wear – check † #			●	●	●	●	●	●
Brake light switch – check †		●	●	●	●	●	●	●
Steering – check †		●	●	●	●	●	●	●
Front fork oil – change	2 years					●		
Rear shock absorber oil leak – check †				●		●		●
Front fork oil leak – check †				●		●		●
Tire wear – check †			●	●	●	●	●	●
Swingarm pivot – lubricate				●		●		●
General lubrication – perform				●		●		●
Nuts, bolts, and fasteners tightness – check †		●		●		●		●
Drive chain – lubricate #	600 km		●	●	●	●	●	●
Drive chain slack – check † #	1000 km	●	●	●	●	●	●	●
Brake fluid level – check †	month	●	●	●	●	●	●	●
Clutch fluid level – check †	month	●	●	●	●	●	●	●
Radiator hoses, connection – check †		●						
Brake fluid – change	2 years					●		
Brake master cylinder cup and dust seal – replace	4 years							
Coolant – change	2 years					●		
Caliper piston seal and dust seal – replace	4 years							
Steering stem bearing – lubricate	2 years					●		
Clutch fluid – change	2 years					●		
Clutch master cylinder cup and seal – replace	4 years							
Clutch slave cylinder piston seal – replace	4 years							

: Service more frequently when operating in severe conditions, dusty, wet, muddy, high speed, or frequent starting/stopping.

* : For higher odometer readings, repeat at the frequency interval established here.

† : Replace, add, adjust, clean, or torque if necessary.

Technical Information - Coasting Enricher

Generally, the greater the engine displacement per cylinder, the leaner the mixture during engine braking causing misfiring or afterfiring. To cope with these, a coasting enricher [A] is used for the ZRX1100. The coating enricher system prevents afterfiring during engine braking by supplying a rich fuel mixture to the engine.

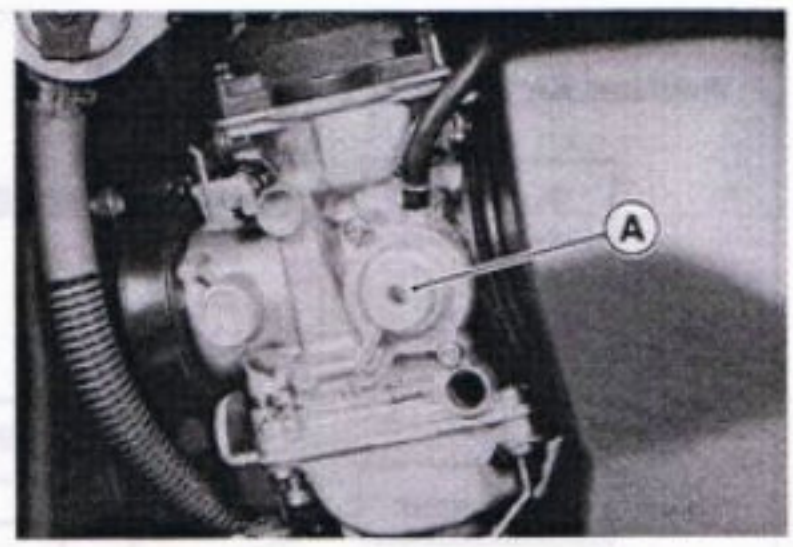

When the motorcycle is cruising or accelerating, the engine vacuum is low, and the return spring [3] pushes the valve in its opened position [5]. The passage [6] is open and the air runs through the pilot jet [7] for better atomization.

During engine braking, a high vacuum is generated behind the butterfly valve [11]. This draws the diaphragm [2] against the return spring [3] to close the valve [12], and then the passage [6]. The mixture becomes rich to prevent afterfiring because the amount of air is reduced.

Coasting Enricher System

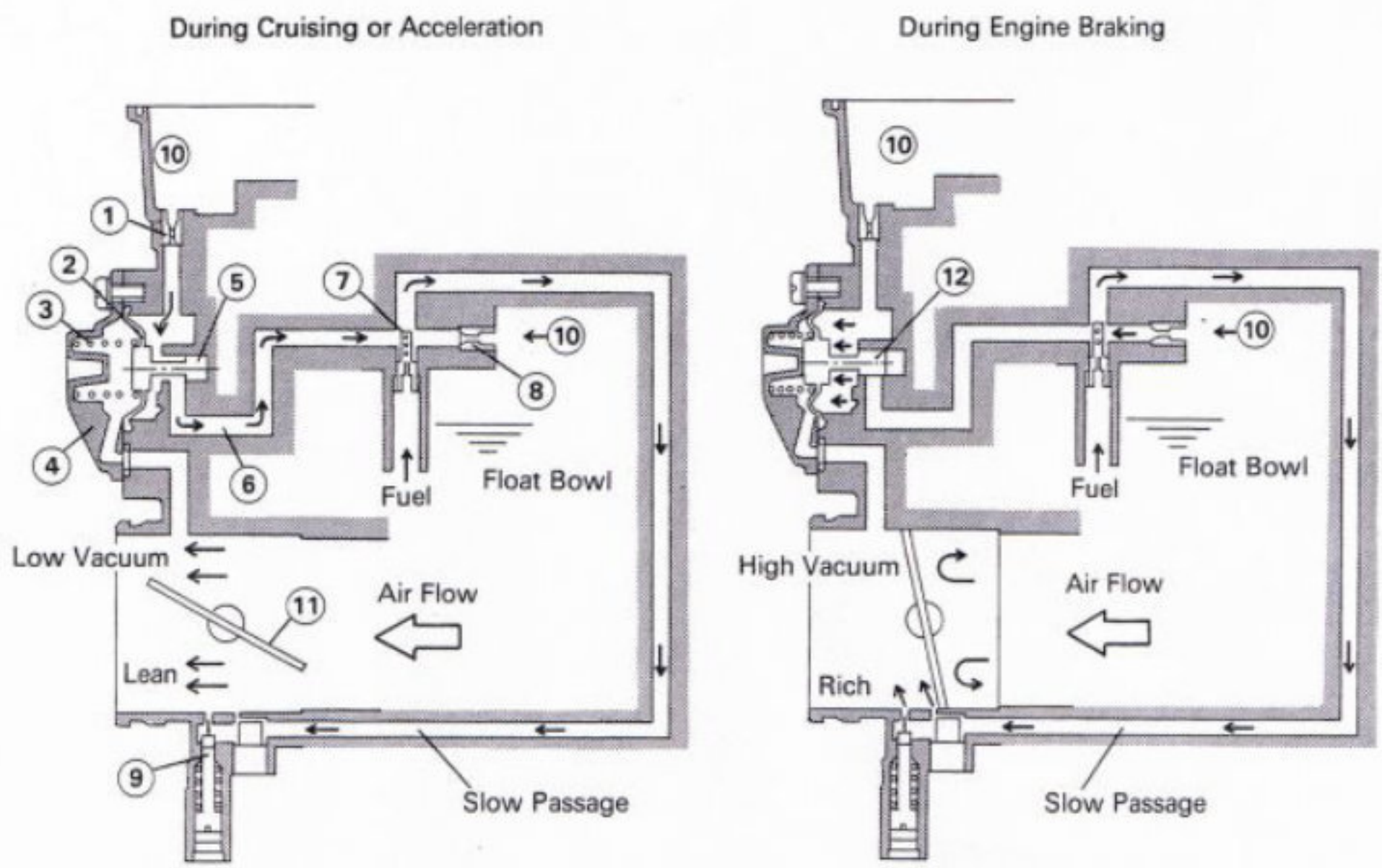

1. Coasting Enricher Jet
2. Diaphragm
3. Return Spring
4. Cover
5. Valve Opened
6. Passage
7. Pilot Jet
8. Pilot Air Jet
9. Pilot Screw
10. Air Cleaner Housing
11. Butterfly Valve (Throttle Valve)
12. Valve Closed

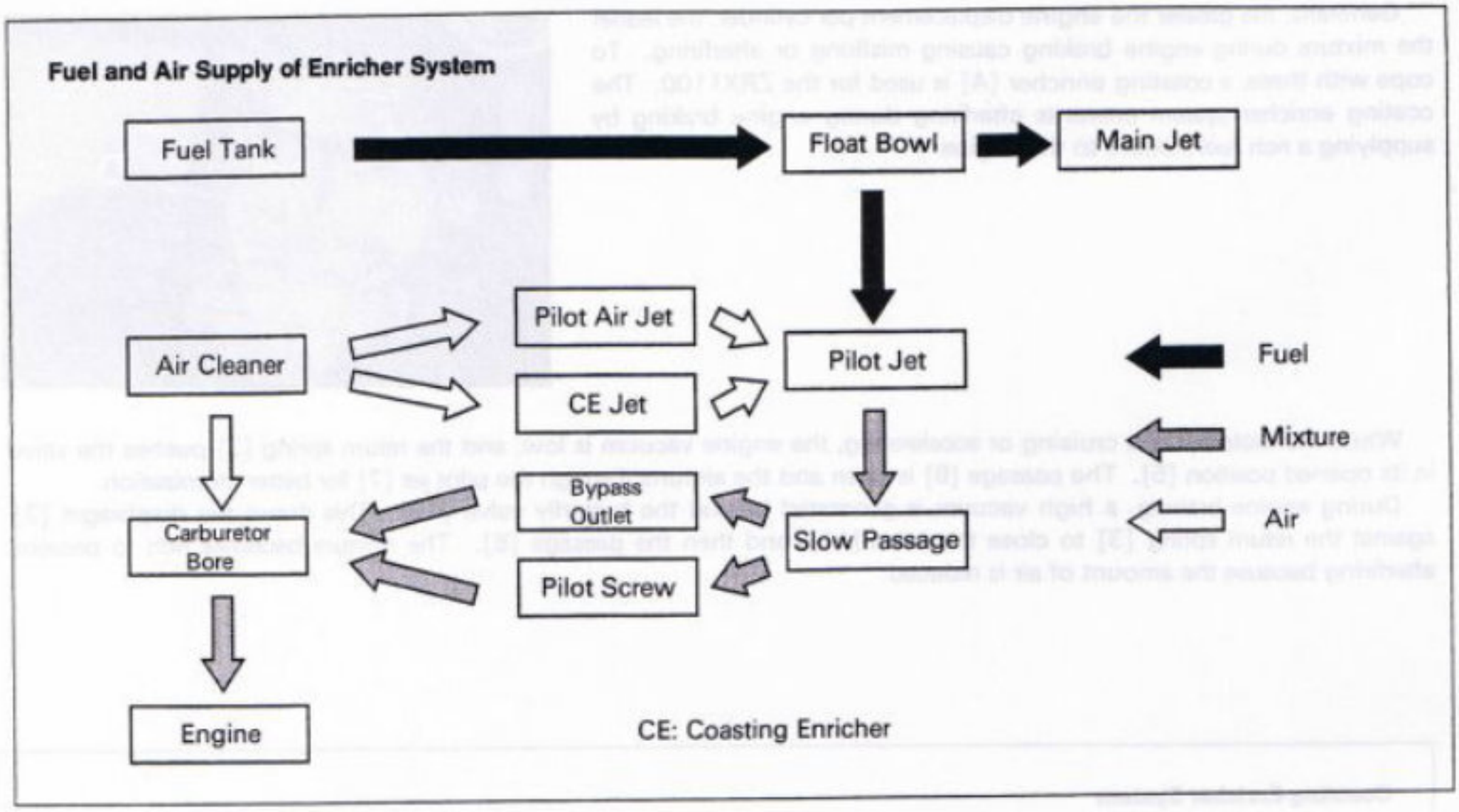
Fuel and Air Supply of Enricher System
Fuel Tank
Float Bowl
Main Jet
Pilot Air Jet
Air Cleaner
Pilot Jet
Fuel
CE Jet
Mixture
Bypass Outlet
Air
Carburetor Bore
Slow Passage
Pilot Screw
Engine
CE: Coasting Enricher

Technical Information - Connecting Rod Big End Nut Tightening

Benefits:

There are two methods for tightening connecting rod big end nuts: **the elastic region fastening method** and **the plastic region fastening method.** With the elastic region fastening method, bolt axial tension increases in proportion to nut rotation angle (bolt strain) when the nut is tightened. Upon removal of torque, the bolt returns to its original length.

The elastic region fastening method has been widely used because it is simple and the bolts can be retightened and reused.

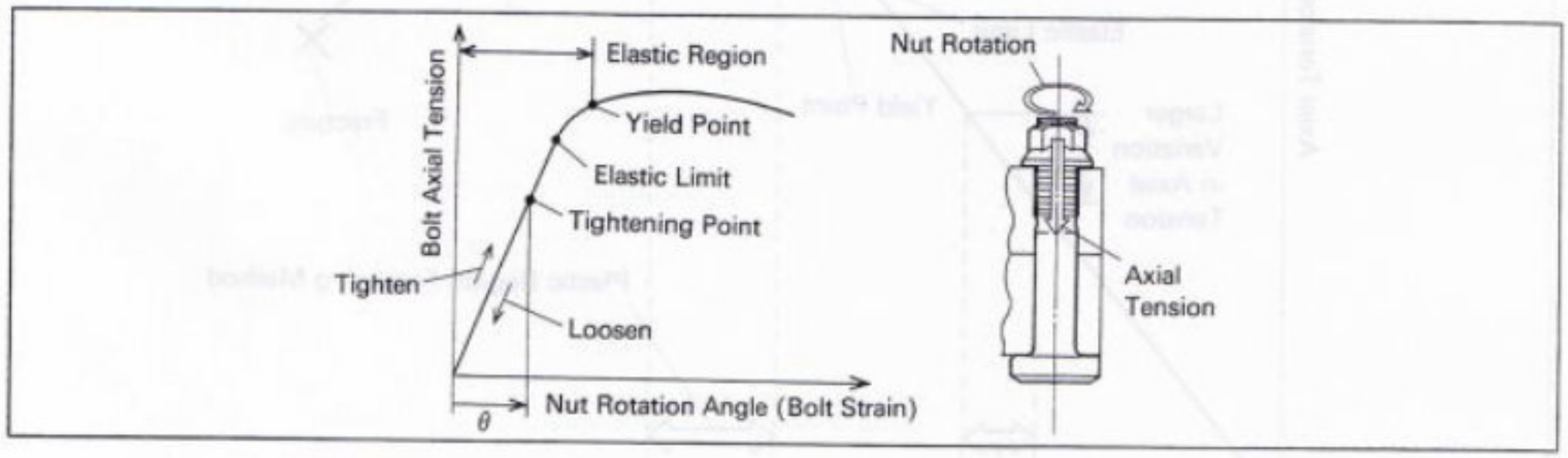

However, the ZRX 1100 uses the plastic region fastening method for reduced connecting rod weight and increased fastening reliability. This is because the ZRX1100's connecting rods are under very severe conditions such as high engine speed and high horsepower.

With the plastic region fastening method, the bolt is tightened beyond its yield point where bolt strain grows rapidly. Upon removal of torque, the bolt doesn't return to original length any more and permanent strain remains.

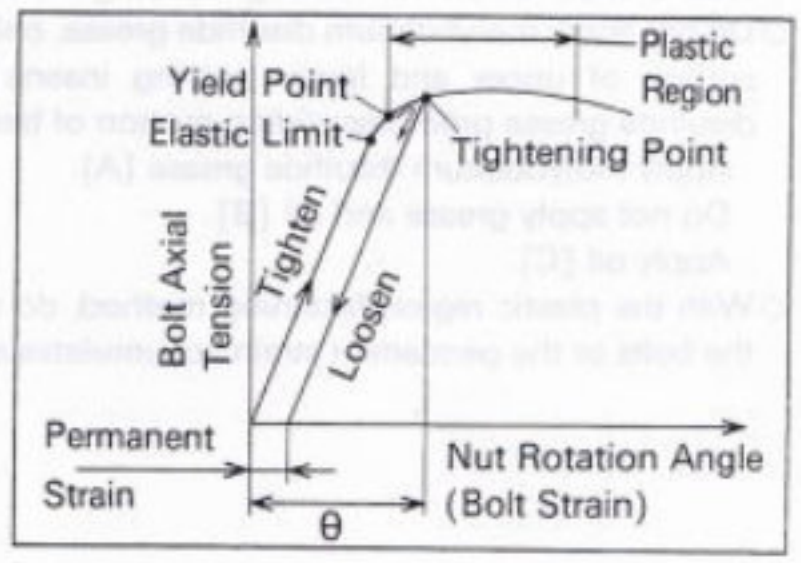

Beyond the yield point, axial tension increases gradually compared to bolt strain : axial tension varies less to variations of nut rotation angle than in the elastic region as shown. Here, axial tension corresponds to clamping force (the actual pressure applied to the two parts being bolted together), and bolt strain corresponds to nut rotation angle or to tightening torque.

From this, the plastic region fastening method provides more stable and higher axial tension. But the method is more sophisticated than conventional torquing and requires precise assembly and disassembly procedures.

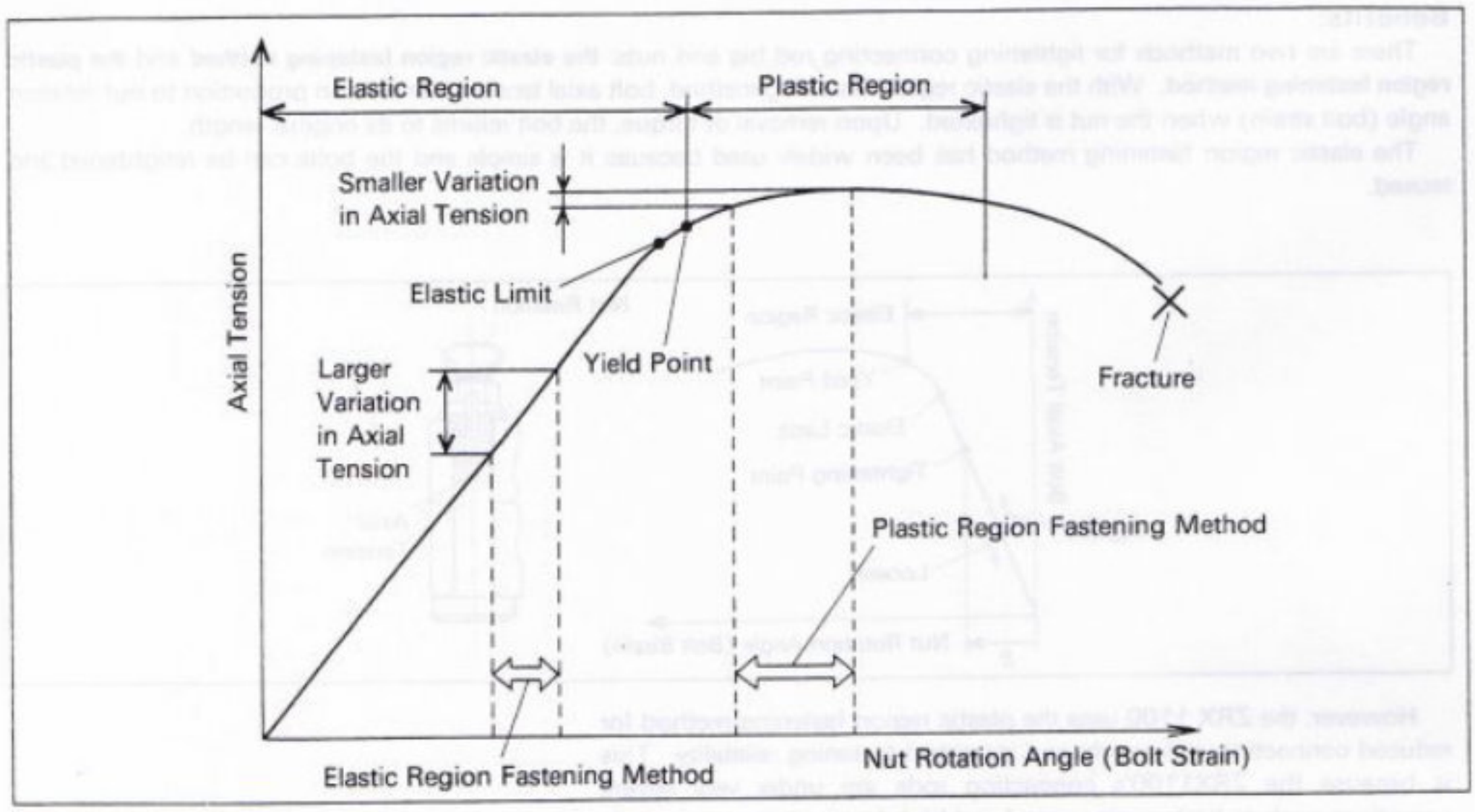

Work Notes:

- Be sure to clean the bolts, nuts, and connecting rods thoroughly with high-flash point solvent, because the new connecting rods, bolts, and nuts are treated with an anti-rust solution. This solution contains hydrogen which could weaken high tensile bolts such as connecting rod bolts and lead to bolt breakage.
- Apply molybdenum disulfide grease to the upper inner surface of the connecting rod big end. This prevents the upper bearing insert from wear and corrosion from its slight sliding motion during operation.
- Do not apply molybdenum disulfide grease, only engine oil to the inner surface of upper and lower bearing inserts because molybdenum disulfide grease promotes sliding motion of bearing inserts.
  Apply molybdenum disulfide grease [A].
  Do not apply grease and oil [B].
  Apply oil [C].
- With the plastic region fastening method, do not retighten and reuse the bolts or the permanent strain accumulates and the bolts may break.

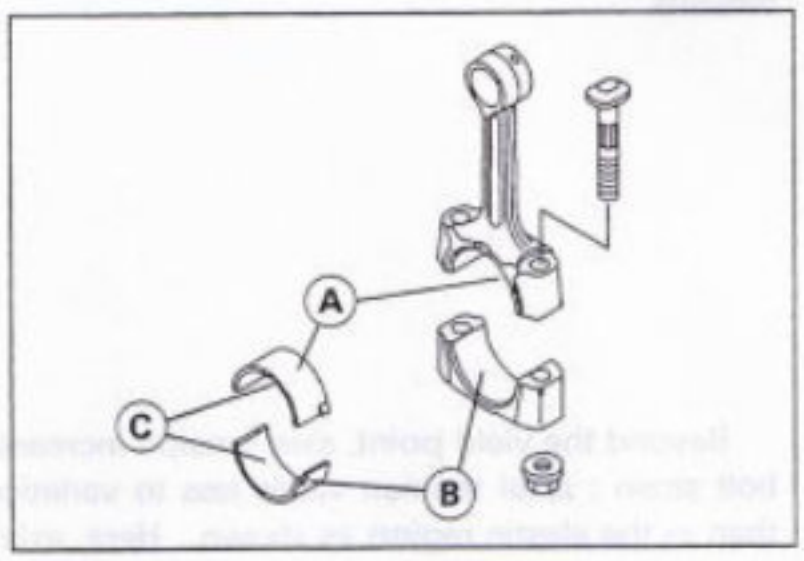

Methods:

- There are two methods of plastic region fastening. One is a **bolt length measurement method** and the other is a **rotation angle method.** Use one of the following two.
  (1) Bolt Length Measurement Method
- This method is preferable because this is a more reliable way to tighten the big end nuts, though it requires a point micrometer [A] and cumbersome work.
  Connecting Rod [B]
  Mark here with a punch [C]
  Nuts [D]
  Fit micrometer pins into punch marks [E].
- To prevent seizure of the bolt threads, apply a small amount of engine oil to the threads.

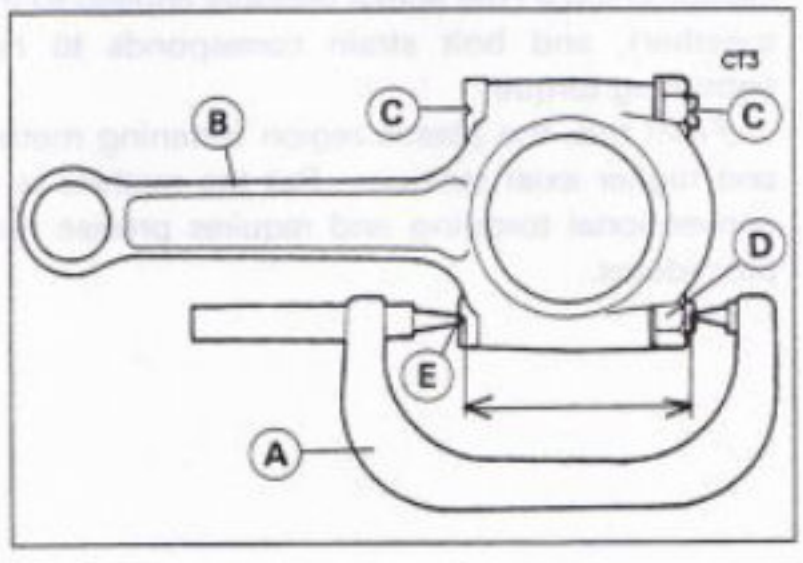

(2) Rotation Angle Method

- First, apply a small amount of engine oil to the threads [A] and seating surface [B] of the nuts to get stable axial tension.

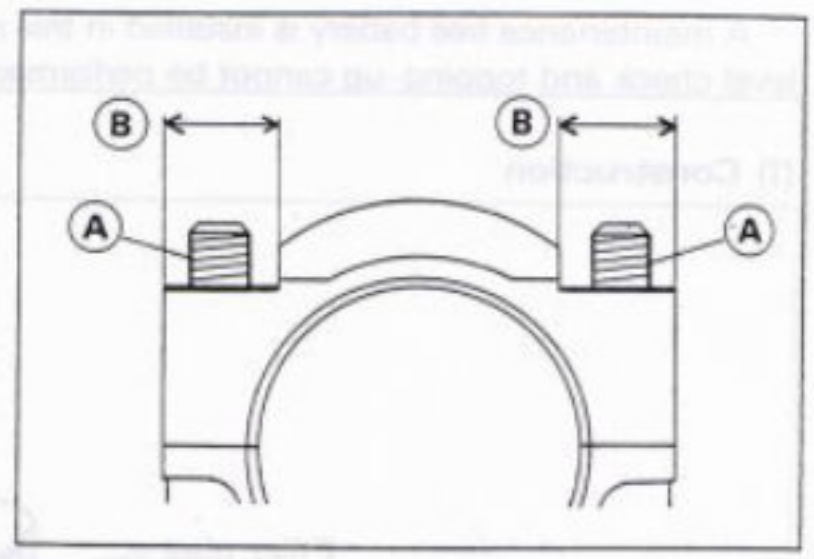

- Next, tighten the nuts to the specified torque (snug torque) to seat the threads and mating surfaces.

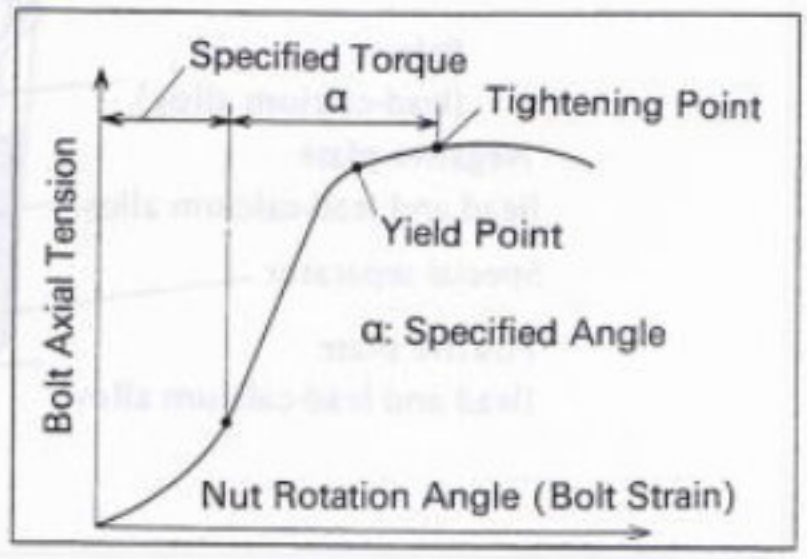

- Finally, tighten the nuts the specified angle α° to exceed the yield point.
  Crankshaft [A]
  Connecting Rod Big End Nuts [B]
  α° [C]

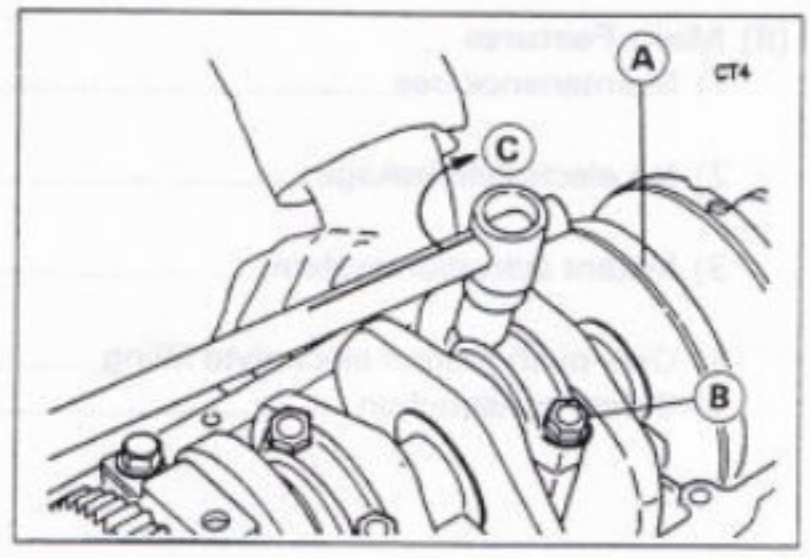

Technical Information – Maintenance Free Battery

A maintenance free battery is installed in this model. The maintenance free battery is a sealed type, and so the electrolyte level check and topping-up cannot be performed.

(I) Construction

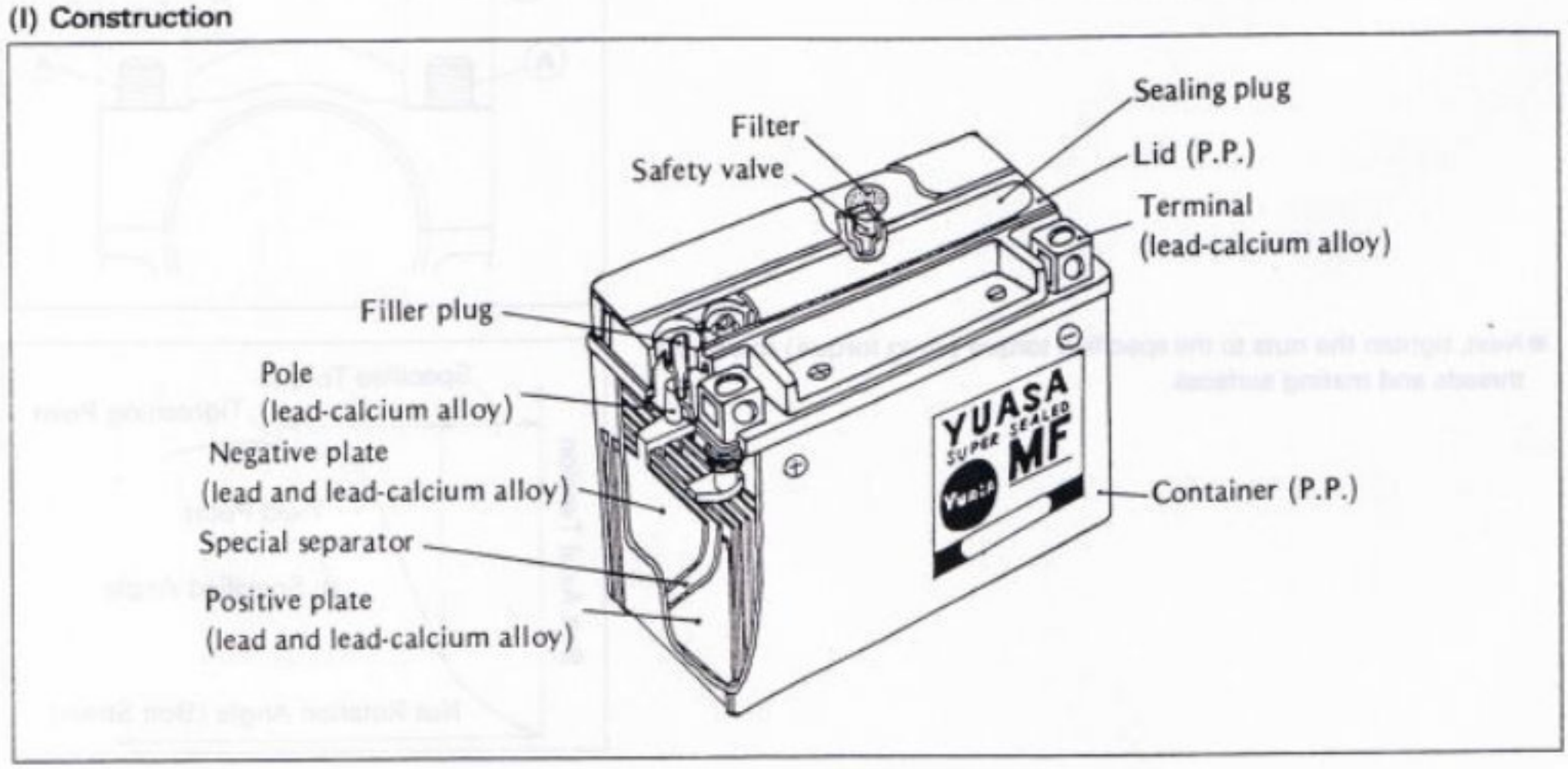

(II) Main Features

1) Maintenance free..... It is not necessary to check the electrolyte level and top-up the electrolyte.
2) No electrolyte leakage..... As the electrolyte is retained firmly in the special separators, there is no free electrolyte in the battery.
3) Instant activation system..... It can be used instantly after filling only the electrolyte without initial charge.
4) One-push motion electrolyte filling..... It is possible to fill the electrolyte by easy one-push motion.
5) Safety construction ..... If the battery internal pressure rises abnormally high, the safety valve opens to release the gas inside the battery to restore the normal pressure and prevent the battery from rupturing. After restoring the normal pressure, the safety valve closes and the battery is sealed again. Moreover, a ceramic filter is disposed on top of the safety valve under the lid to remove risk of ignition or explosion caused by fire from outside.
6) Compact and high performance..... No presence of free electrolyte allows the battery made lower in height, thus resulting in enhanced volume efficiency. Moreover, gas being absorbed inside the battery eliminates the need for a gas exhaust tube.
7) Strong charge/discharge characteristics .... It can amply withstand deep charge/discharge cycles.

(III) Principle of Sealing Structure

A lead-acid battery operates under the following chemical reaction:

$$\underset{\substack{\text{(Lead peroxide)}\\ \text{Positive active material}}}{\overset{(+)}{PbO_2}} + \underset{\substack{\text{(Sulfuric acid)}\\ \text{Electrolyte}}}{2H_2SO_4} + \underset{\substack{\text{(Spongy lead)}\\ \text{Negative active material}}}{\overset{(-)}{Pb}} \underset{\text{Charge}}{\overset{\text{Discharge}}{\rightleftarrows}} \underset{\substack{\text{(Lead sulfate)}\\ \text{Positive active material}}}{\overset{(+)}{PbSO_4}} + \underset{\substack{\text{(Water)}\\ \text{Electrolyte}}}{2H_2O} + \underset{\substack{\text{(Lead sulfate)}\\ \text{Negative active material}}}{\overset{(-)}{PbSO_4}}$$

Normally in an ordinary lead-acid battery when it comes to an end of a charge, where the lead surface being a discharge product returns to lead peroxide and spongy lead, the charge current flowing thereafter is used exclusively to decompose electrostatically water from the electrolyte, thus resulting in generation of hydrogen gas from the negative plate and oxygen gas from the positive plate. The gases so generated are released out of the battery, causing the amount of electrolyte decreased to require occasional water replenishment.

A maintenance free battery, however, is so designed that, when it is overcharged, even if the positive plate is fully charged, the negative plate remains not fully turned to spongy lead. Therefore, even when the positive plate is overcharged generating oxygen gas, the negative plate is not fully charged, hence generating no hydrogen gas.

Moreover, the oxygen gas generated from the positive plate immediately reacts with the charged active material on the negative plate, and returns to water, with the ultimate result of no water loss.

Pb Negative active material (charged state)	+	1/2 O_2 Oxygen generated from positive plate	→	(PbO) Negative active material		
(PbO)	+	H_2SO_4 Electrolyte	→	$PbSO_4$ Negative active material (charged state)	+	H_2O Water

Thus, the negative plate is made as not to get fully charged. Even if the overcharge continues, the oxygen gas generated inside the battery is absorbed by the negative plate, a process called oxygen cycle, which theoretically prevents water loss, and allows the battery to be sealed.

Technical Information – K-TRIC (Kawasaki Throttle Responsive Ignition Control)

The ZRX1100 features K-TRIC. K-TRIC digitally controls the ignition curve not only according to engine rpm, but also according to throttle opening. A throttle sensor [A] is electrically linked to a microcomputer that varies the ignition curve infinitely for greater combustion efficiency.

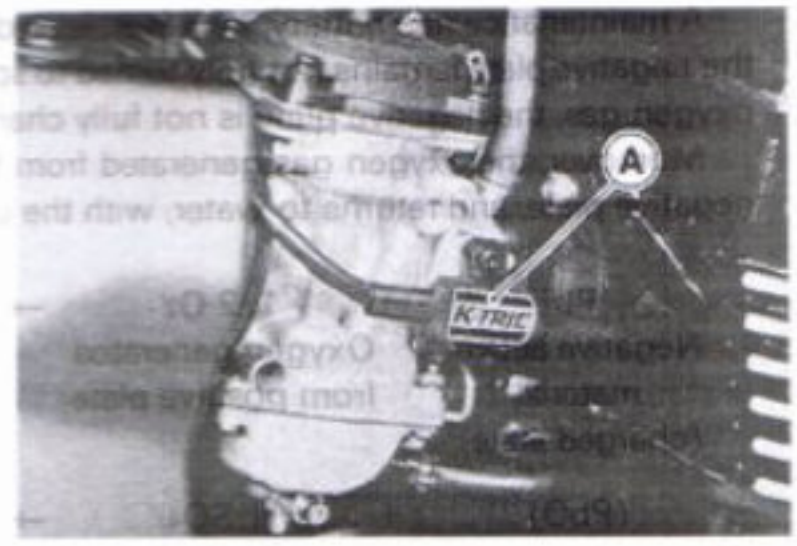

How it works?

The throttle sensor is located on the right hand end of the carburetor throttle shaft, and senses throttle opening. This sensor is a rotating type variable resistor that changes voltage according to throttle opening. The microcomputer senses this voltage change so that the igniter determines ignition timing not only according to engine rpm, but also according to throttle opening.

[A] Ground Terminal
[B] Output Terminal
[C] Voltage Terminal

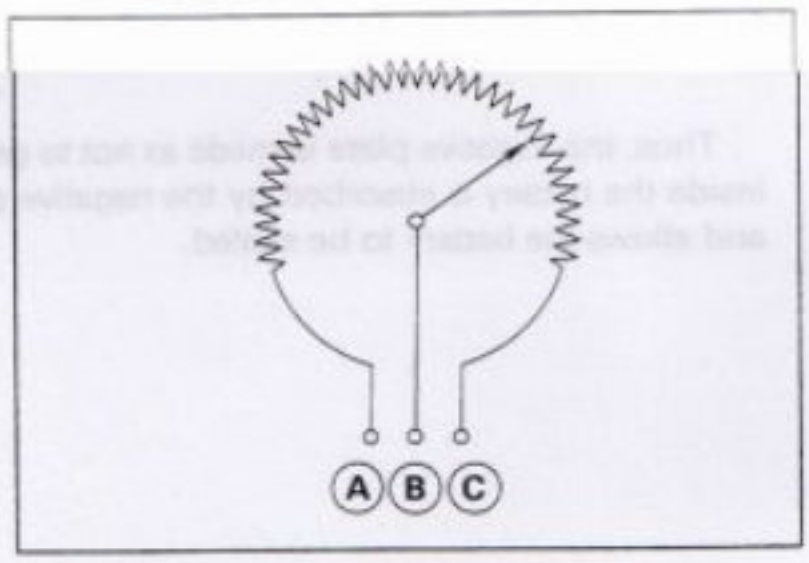

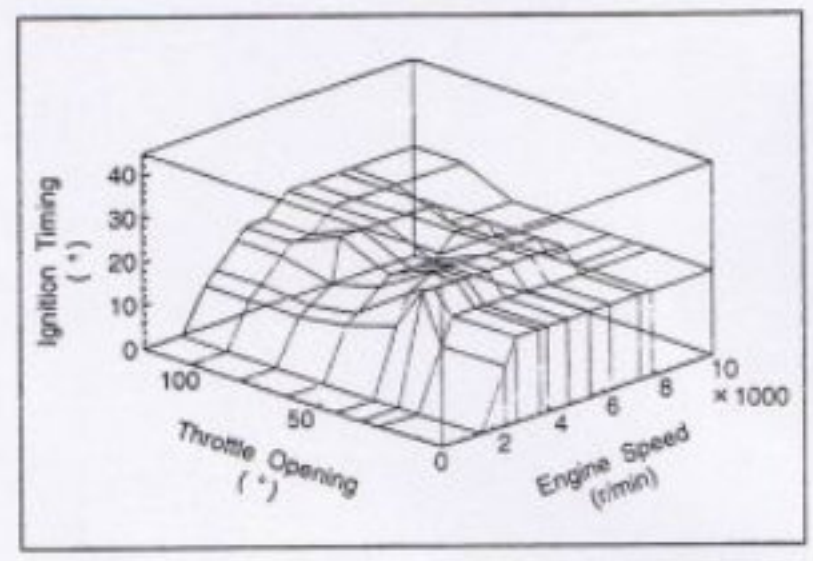

Function

In a conventional digital ignition system. the igniter changes ignition timing only according to engine rpm, and engine load is disregarded. To provide greater combustion efficiency, K-TRIC digitally controls the ignition curve according to engine rpm and engine load as indicated by throttle position. The result is a three dimensional ignition curve for improved combustion efficiency from walking speed to red line.

[A] Idling (see Fuel System chapter)
[B] Full Throttle

Adding to the conventional functions, such as dwell control, anti-theft, and over rev protection. K-TRIC has a fail safe (self diagnosis) function. In case of throttle sensor trouble a wiring shored or open circuit, an ordinary ignition timing control system does not work well, and in the worst case the engine would be damaged. In such a case, the K-TRIC igniter senses this trouble and locks ignition timing in the throttle wide open position to protect the engine from damage.

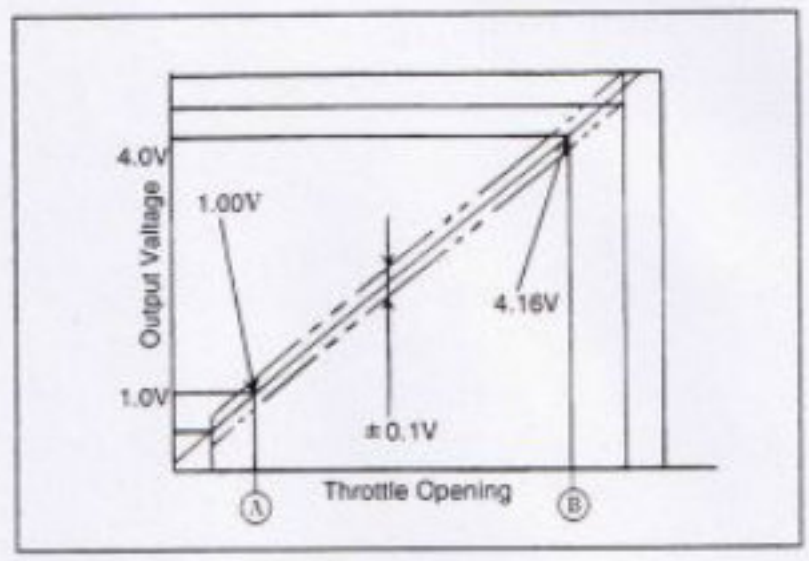

Torque and Locking Agent

The following tables list the tightening torque for the major fasteners requiring use of a non-permanent locking agent or liquid gasket.

Letters used in the "Remarks" column mean:

G : Apply grease to the threads.
L : Apply a non-permanent locking agent to the threads.
LG : Apply liquid gasket to the threads.
Lh : Left-hand threads.
M : Apply molybdenum disulfide grease.
O : Apply an oil to the threads and seating surface.
S : Tighten the fasteners following the specified sequence.
SS : Apply silicone sealant.
St : Stake the fasteners to prevent loosening.
R : Replacement parts

The table below, relating tightening torque to thread diameter, lists the basic torque for the bolts and nuts. Use this table for only the bolts and nuts which do not require a specific torque value. All of the values are for use with dry solvent-cleaned threads.

Basic Torque for General Fasteners

Threads dia. (mm)	Torque N-m	Torque kg-m	Torque ft-lb
5	3.4 ~ 4.9	0.35 ~ 0.50	30 ~ 43 in-lb
6	5.9 ~ 7.8	0.60 ~ 0.80	52 ~ 69 in-lb
8	14 ~ 19	1.4 ~ 1.9	10.0 ~ 13.5
10	25 ~ 34	2.6 ~ 3.5	19.0 ~ 25
12	44 ~ 61	4.5 ~ 6.2	33 ~ 45
14	73 ~ 98	7.4 ~ 10.0	54 ~ 72
16	115 ~ 155	11.5 ~ 16.0	83 ~ 115
18	165 ~ 225	17.0 ~ 23.0	125 ~ 165
20	225 ~ 325	23 ~ 33	165 ~ 240

Fastener		Torque N-m	Torque kg-m	Torque ft-lb	Remarks
Fuel System:					
Fuel Tap Plate Screws		0.8	0.08	7 in-lb	
Fuel Tap Diaphragm Cover Screws		1.0	0.10	9 in-lb	
Fuel Tap Knob Screw		1.5	0.15	13 in-lb	
Cooling System:					
Water Hose Clamp Screws		2.5	0.25	22 in-lb	
Water Pipe Mounting Bolts		9.8	1.0	87 in-lb	L(1)
Water Pump Air Bleeder Bolt		9.8	1.0	87 in-lb	
Thermostat Housing Air Bleeder Bolt		7.8	0.80	69 in-lb	
Coolant Drain Plug		7.8	0.80	69 in-lb	
Radiator Fan Switch		24	2.4	17.5	SS
Water Temperature Switch		7.8	0.80	69 in-lb	SS
Water Pump Inlet Pipe Bolt		–	–	–	L
Water Pump Mounting Bolts		9.8	1.0	87 in-lb	
Water Pump Cover Bolts		9.8	1.0	87 in-lb	
Engine Top End:					
Spark Plugs		14	1.4	10.0	
Air Suction Valve Cover Bolts		9.8	1.0	87 in-lb	
Cylinder Head Cover Bolts		9.8	1.0	87 in-lb	
Pickup Coil Cover Bolts		9.8	1.0	87 in-lb	L(2)
Chain Tensioner Mounting Bolts		9.8	1.0	87 in-lb	
Chain Tensioner Cap		20	2.0	14.5	
Camshaft Cap Bolts		12	1.2	104 in-lb	S
Camshaft Sprocket Bolts		15	1.5	11.0	L
Upper Chain Guide Bolts		12	1.2	140 in-lb	L
Water Pipe Mounting Bolts		9.8	1.0	87 in-lb	L(1)
Water Hose Clamp Screws		2.5	0.25	22 in-lb	
Oil Hose Banjo Bolt		25	2.5	18.0	
Cylinder Head Bolts	Φ11 mm	51	5.2	38	S,O (washer)
	Φ10 mm	39	4.0	29	S,O (washer)
	Φ6 mm	9.8	1.0	87 in-lb	S
Rocker Shaft End Bolts		25	2.5	18.0	
Rear Camshaft Chain Guide Bolt		20	2.0	14.5	L
Camshaft Chain Plate Bolts		9.8	1.0	87 in-lb	

Fastener		Torque			Remarks
		N-m	kg-m	ft-lb	
Cylinder Bolts	Φ6 mm	15	1.5	11.0	S
Carburetor Holder Bolts		12	1.2	104 in-lb	
Muffler Clamp Bolt		34	3.5	25	
Muffler Body Clamp Nut		34	3.5	25	
Muffler Body Mounting Nuts		25	2.5	18.0	
Clutch:					
Clutch Lever Pivot Bolt		1.0	0.10	9 in-lb	
Clutch Lever Pivot Bolt Locknut		5.9	0.60	52 in-lb	
Clutch Slave Cylinder Bleed Valve		7.8	0.80	69 in-lb	
Clutch Slave Cylinder Bolts		–	–	–	L(2)
Clutch Hose Banjo Bolt		25	2.5	18.0	
Clutch Pipe Banjo Bolt		25	2.5	18.0	
Clutch Reservoir Cap Screws		1.5	0.15	13 in-lb	
Clutch Master Cylinder Clamp Bolts		8.8	0.90	78 in-lb	S
Starter Lockout Switch Screws		1.0	0.10	9 in-lb	
Clutch Cover Bolts		9.8	1.0	87 in-lb	L(4)
Clutch Cover Damper Bolts		9.8	1.0	87 in-lb	L
Clutch Cover Oil Pipe Banjo Bolt		12	1.2	104 in-lb	
Clutch Cover Oil Pipe Mounting Bolt		5.9	0.60	52 in-lb	
Clutch Spring Bolts		11	1.1	95 in-lb	
Clutch Hub Nut		130	13.5	98	R
Engine Lubrication System:					
Oil Filler Plug		1.5 or Hand-Tight	0.15 or Hand-Tight	13 in-lb or Hand-Tight	
Engine Drain Plug		20	2.0	14.5	
Oil Filter Bolt		20	2.0	14.5	O
Oil Pan Bolts		9.8	1.0	87 in-lb	L(4)
Oil Pressure Relief Valve		15	1.5	11.0	L
Oil Pressure Switch Terminal Bolt		1.5	0.15	13 in-lb	
Oil Pressure Switch		15	1.5	11.0	SS
Oil Pump Mounting Bolts		12	1.2	104 in-lb	L
Oil Pump Gear Holder Screws		5.4	0.55	48 in-lb	L
Oil Pipe Banjo Bolts		25	2.5	18.0	
Oil Hose Banjo Bolts:	Φ12 mm	25	2.5	18.0	
	Φ14 mm	34	3.5	25	
Oil Pump Bracket Bolts		9.8	1.0	87 in-lb	
Main Oil Passage Plug		18	1.8	13.0	
Oil Pan Plug		15	1.5	11.0	L
Engine Removal/Installation:					
Downtube Bolts		44	4.5	33	
Engine Mounting Bolts and Nuts		44	4.5	33	
Engine Bracket Bolts		23	2.3	16.5	
Crankshaft/Transmission:					
Lower Crankcase Plug	Φ25 mm	18	1.8	13.0	
Crankcase Bolts:	Φ9 mm	32	3.3	24	S
	Φ8 mm	27	2.8	20	S
	Φ7 mm	18	1.8	13.0	S
	Φ6 mm	15	1.5	11.0	S
Main Oil Passage Plug		18	1.8	13.0	
Connecting Rod Big End Nuts		in the text	←	←	
Main Bearing Cap Bolts		32	3.3	24	
Balancer Shaft Clamp Lever Bolt		9.8	1.0	87 in-lb	L

Fastener	Torque			Remarks
	N-m	kg-m	ft-lb	
Balancer Shaft Plate Bolt	9.8	1.0	87 in-lb	L
Balancer Shaft Clamp Bolt	9.8	1.0	87 in-lb	
Alternator Shaft Nut	59	6.0	43	
Alternator Shaft Bolt	25	2.5	18.0	
Alternator Chain Tensioner Bolts	9.8	1.0	87 in-lb	L
Alternator Chain Sprocket Bolt	25	2.5	18.0	
Alternator Chain Guide Bolts	9.8	1.0	87 in-lb	L
Starter Motor Clutch Bolts	12	1.2	104 in-lb	L
Timing Rotor Bolt	25	2.5	18.0	
External Shift Mechanism Cover Bolts	9.8	1.0	87 in-lb	L(4)
Shift Shaft Return Spring Pin(Bolt)	20	2.0	14.5	L
Neutral Switch	15	1.5	11.0	
Shift Drum Bearing Holder Bolts	13	1.3	113 in-lb	L
Shift Drum Cam Screw	–	–	–	L
Bearing Holder Bolts	9.8	1.0	87 in-lb	
Transmission Oil Pipe Holder Bolt	9.8	1.0	87 in-lb	
Position Plate Nuts	9.8	1.0	87 in-lb	
Engine Breather Cover Bolts	9.8	1.0	87 in-lb	
Separator Mounting Bolts	5.4	0.55	48 in-lb	
Wheels/Tires:				
Front Axle Clamp Bolts	20	2.0	14.5	
Front Axle	145	15.0	110	
Rear Axle Nut	98	10.0	72	
Final Drive:				
Chain Adjuster Clamp Bolts	39	4.0	29	
Torque Link Nut (Front)	34	3.5	25	
Torque Link Nut (Rear)	25	2.5	18.0	
Engine Sprocket Nut	125	13.0	94	O
Rear Sprocket Nuts	74	7.5	54	
Rear Sprocket Studs	–	–	–	L
Rear Axle Nut	98	10.0	72	
Brakes:				
Caliper Bleed Valves	7.8	0.80	69 in-lb	
Brake Hose Banjo Bolts	25	2.5	18.0	
Brake Hose Joint Bolts	6.9	0.70	61 in-lb	
Brake Lever Pivot Bolt	1.0	0.10	9 in-lb	
Brake Lever Pivot Bolt Locknut	5.9	0.60	52 in-lb	
Front Brake Reservoir Cap Screws	1.5	0.15	13 in-lb	
Front Brake Light Switch Screws	1.2	0.12	10 in-lb	
Front Master Cylinder Clamp Bolts	8.8	0.90	78 in-lb	S
Front Caliper Mounting Bolts	34	3.5	25	
Rear Caliper Mounting Bolts	25	2.5	18.0	
Front Caliper Assembly Bolts	21	2.1	15.0	
Rear Caliper Assembly Bolts	32	3.3	24	
Front Brake Pad Spring Bolts	2.9	0.30	26 in-lb	
Brake Disc Mounting Bolts	27	2.8	20	L
Rear Master Cylinder Mounting Bolts	23	2.3	16.5	
Rear Master Cylinder Push Rod Locknut	18	1.8	13.0	
Suspension:				
Upper Front Fork Clamp Bolts	29	3.0	22	
Lower Front Fork Clamp Bolts	21	2.1	15.0	
Front Fork Top Plug	23	2.3	16.5	

Fastener	Torque			Remarks
	N-m	kg-m	ft-lb	
Piston Rod Nut	15	1.5	11.0	
Front Fork Bottom Allen Bolt	39	4.0	29	L
Front Axle Clamp Bolts	20	2.0	14.5	
Rear Shock Absorber Upper Mounting Bolts	49	5.0	36	
Rear Shock Absorber Lower Mounting Bolts	39	4.0	29	
Swingarm Pivot Nut	98	10.0	72	
Steering:				
Steering Stem Head Nut	44	4.5	33	
Steering Stem Nut	4.9	0.50	43 in-lb	see the text
Handlebar Holder Bolts	23	2.3	16.5	
Handlebar Weight Screws	–	–	–	L
Handlebar Switch Housing Screws	3.4	0.35	30 in-lb	
Upper Front Fork Clamp Bolts	29	3.0	22	
Lower Front Fork Clamp Bolts	21	2.1	15	
Frame:				
Front Footpeg Bolts	34	3.5	25	
Electrical System:				
Spark Plugs	14	1.4	10.0	
Pickup Coil Bolts	5.9	0.60	52 in-lb	L
Pickup Coil Cover Bolts	9.8	1.0	87 in-lb	L(2)
Timing Rotor Bolt	25	2.5	18.0	
Alternator Mounting Bolts	25	2.5	18.0	L
Alternator Cover Nuts	4.4	0.45	39 in-lb	
Alternator Coupling Bolt	9.8	1.0	87 in-lb	
Alternator Bearing Retainer Screws	2.5	0.25	22 in-lb	
Alternator Studs	8.8	0.90	78 in-lb	
Alternator Regulator Screws	3.4	0.35	30 in-lb	
Alternator Lead Terminal Screws	3.4	0.35	30 in-lb	
Alternator Brush Screws	3.4	0.35	30 in-lb	
Starter Motor Terminal Locknut	11	1.1	95 in-lb	
Starter Motor Terminal Nut	4.9	0.50	43 in-lb	
Starter Relay Terminal Bolts	4.9	0.50	43 in-lb	
Starter Motor Assembly Bolts	4.9	0.50	43 in-lb	
Starter Motor Mounting Bolts	9.8	1.0	87 in-lb	
Turn Signal Light Screws	1.0	0.10	9 in-lb	
Handlebar Switch Housing Screws	3.4	0.35	30 in-lb	
Radiator Fan Switch	24	2.4	17.5	SS
Water Temperature Switch	7.8	0.80	69 in-lb	SS
Oil Pressure Switch Terminal Bolt	1.5	0.15	13 in-lb	
Oil Pressure Switch	15	1.5	11.0	SS
Neutral Switch	15	1.5	11.0	
Sidestand Switch Bolts	8.8	0.90	78 in-lb	L
Front Brake Light Switch Screws	1.2	0.12	10 in-lb	
Starter Lockout Switch Screws	1.0	0.10	9 in-lb	

Special Tools and Sealant

Oil Pressure Gauge, 5 kg/cm²: 57001-125

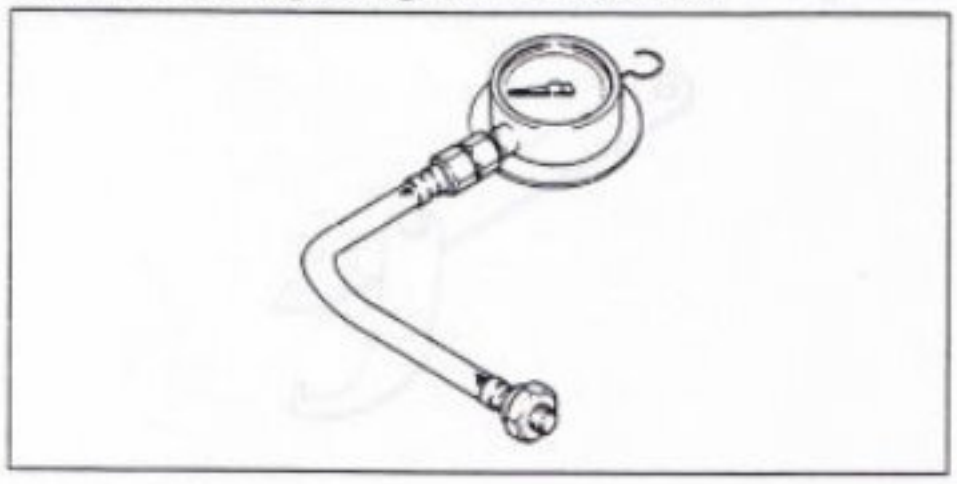

Bearing Puller: 57001-158

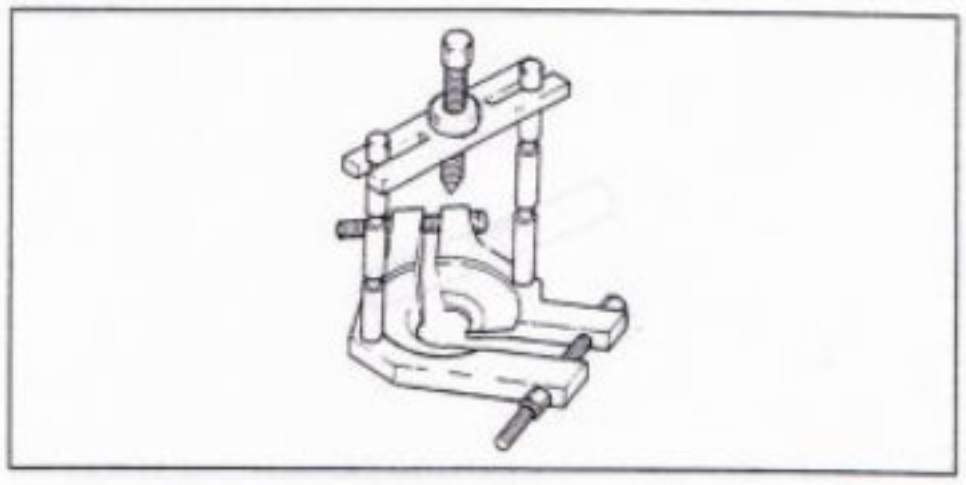

Bearing Puller: 57001-135

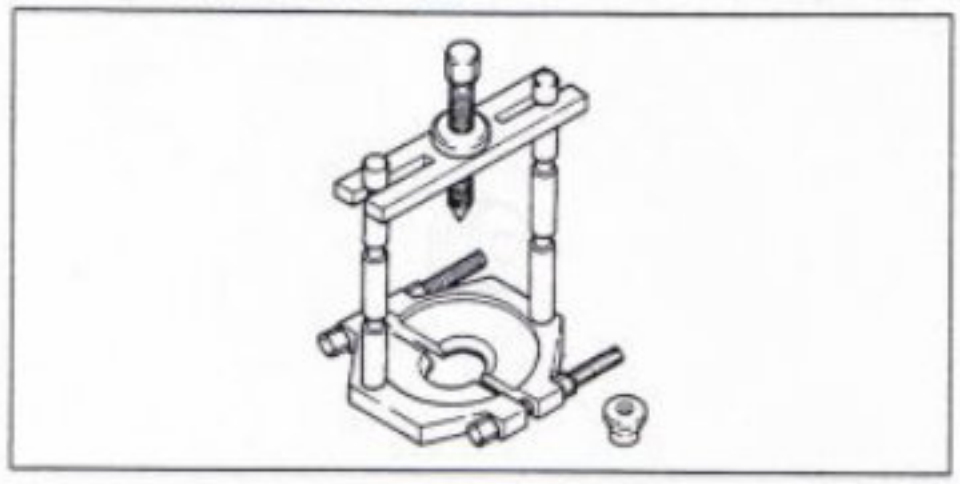

Compression Gauge: 57001-221

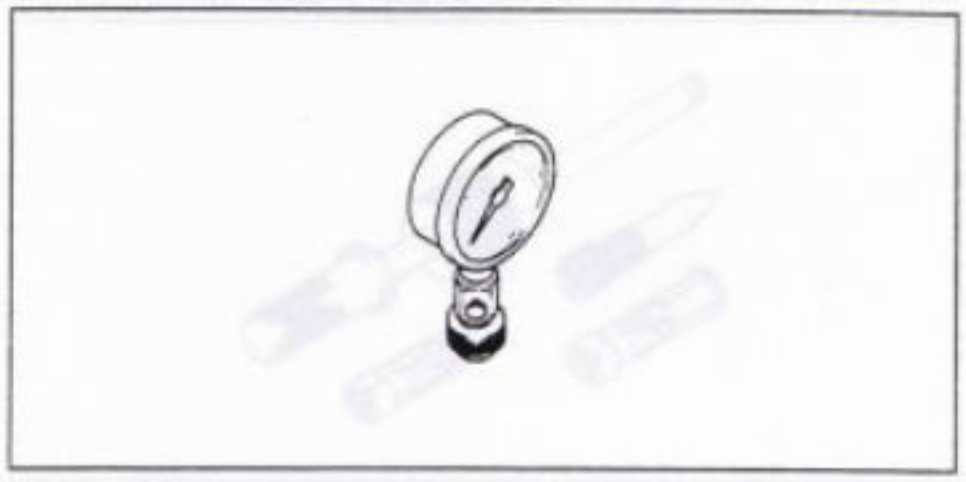

Steering Stem Bearing Driver: 57001-137

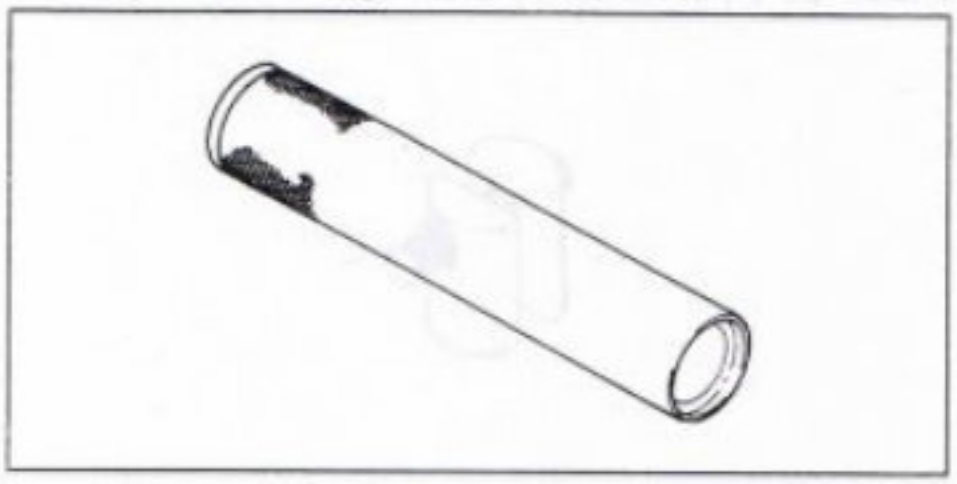

Valve Spring Compressor Assembly: 57001-241

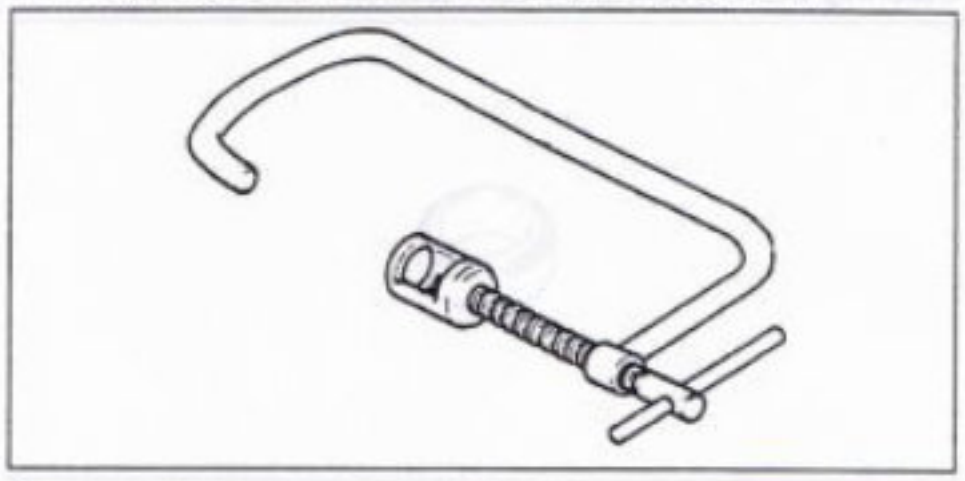

Inside Circlip Pliers: 57001-143

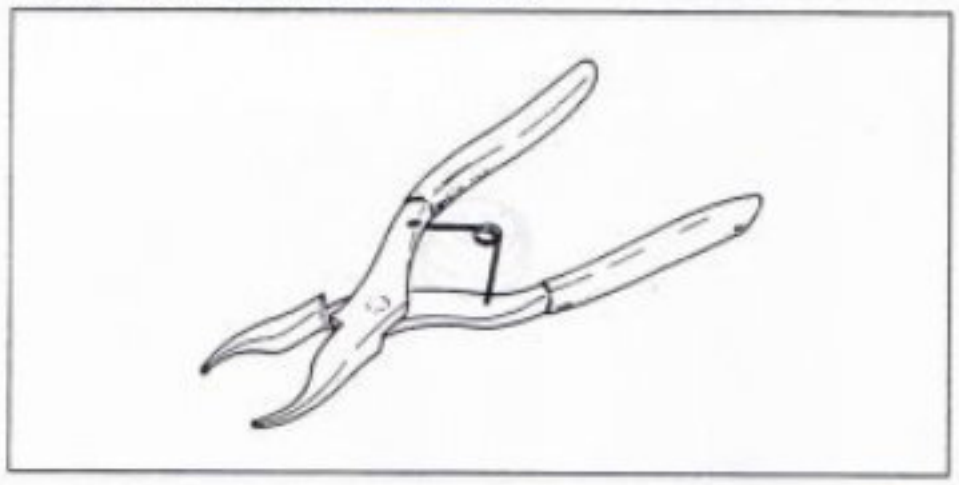

Bearing Puller Adapter: 57001-317

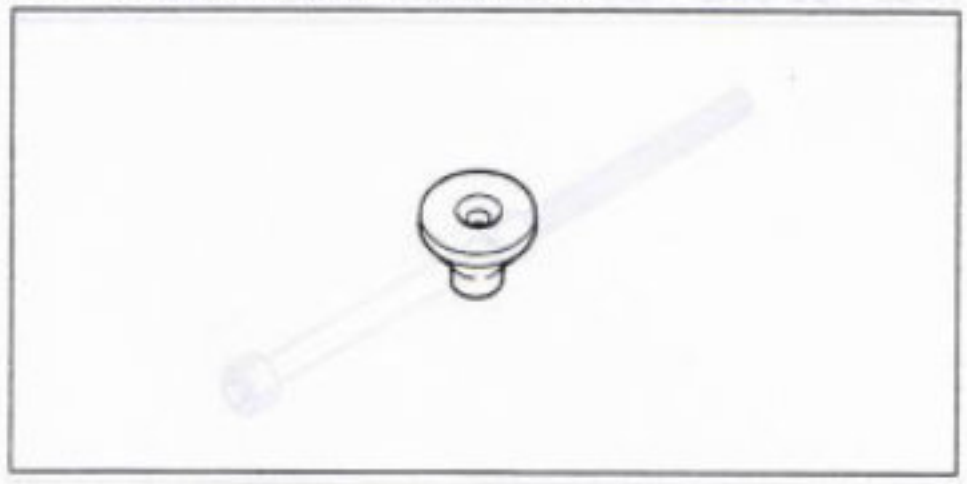

Outside Circlip Pliers: 57001-144

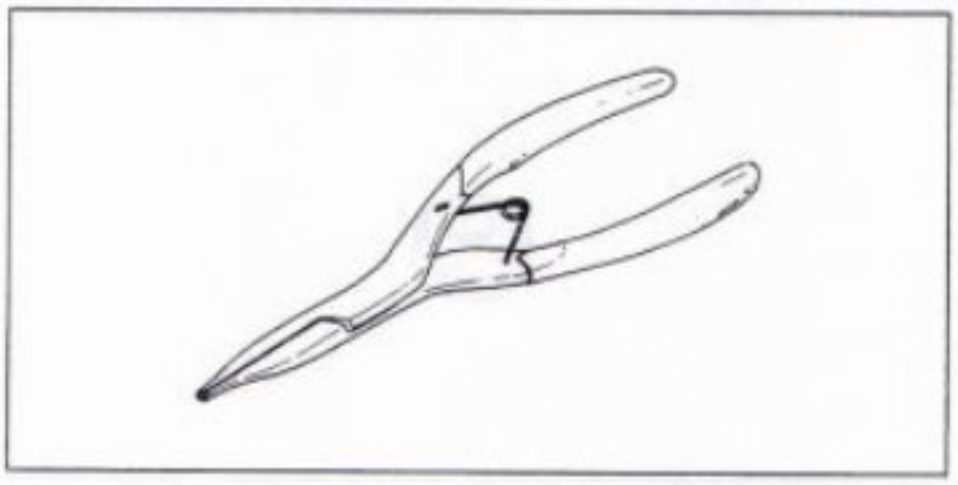

Piston Pin Puller Assembly: 57001-910

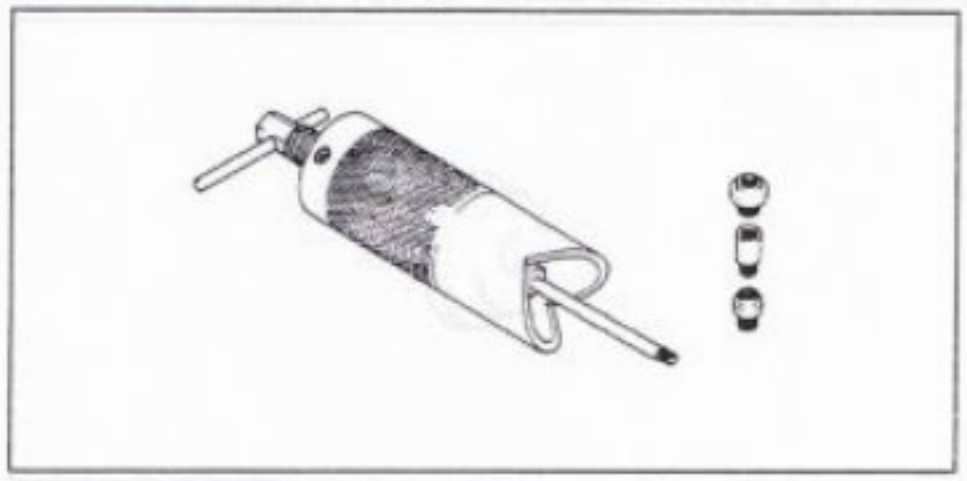

Fuel Level Gauge: 57001-1017

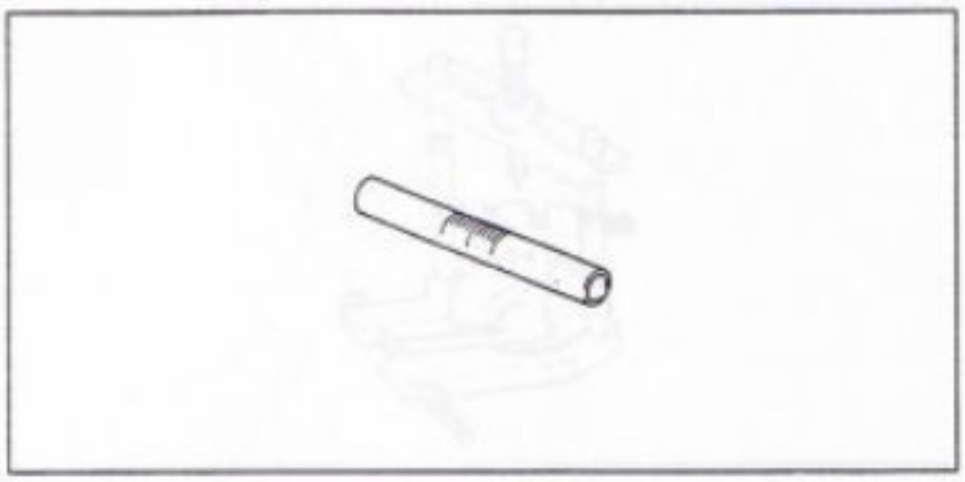

Oil Seal & Bearing Remover: 57001-1058

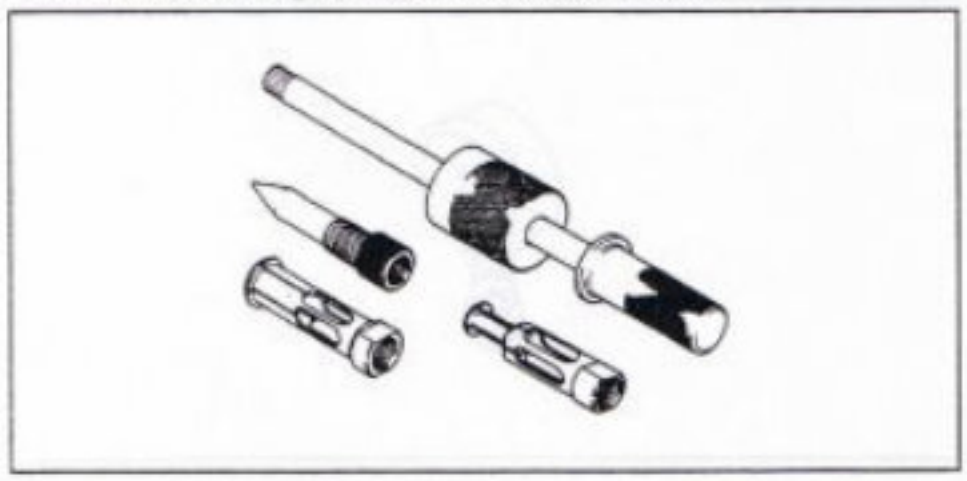

Steering Stem Bearing Driver Adapter: 57001-1074

Head Pipe Outer Race Press Shaft: 57001-1075

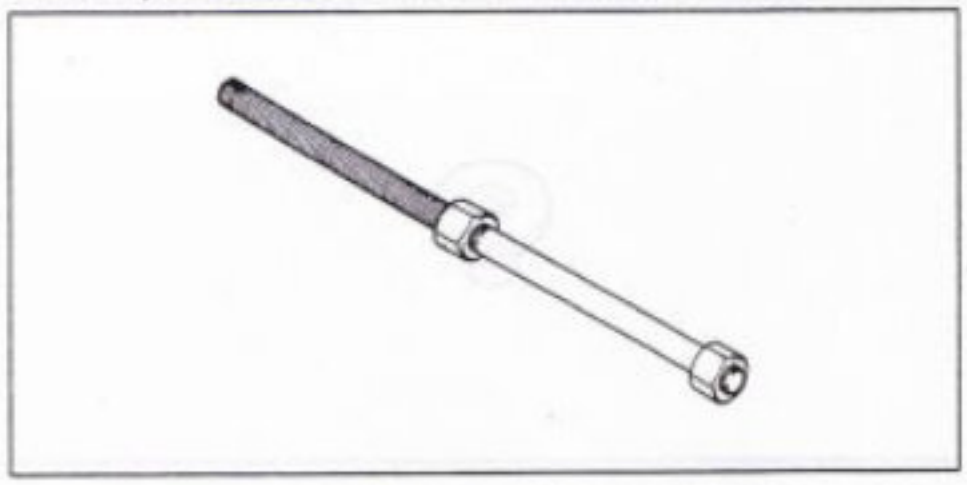

Head Pipe Outer Race Driver: 57001-1076

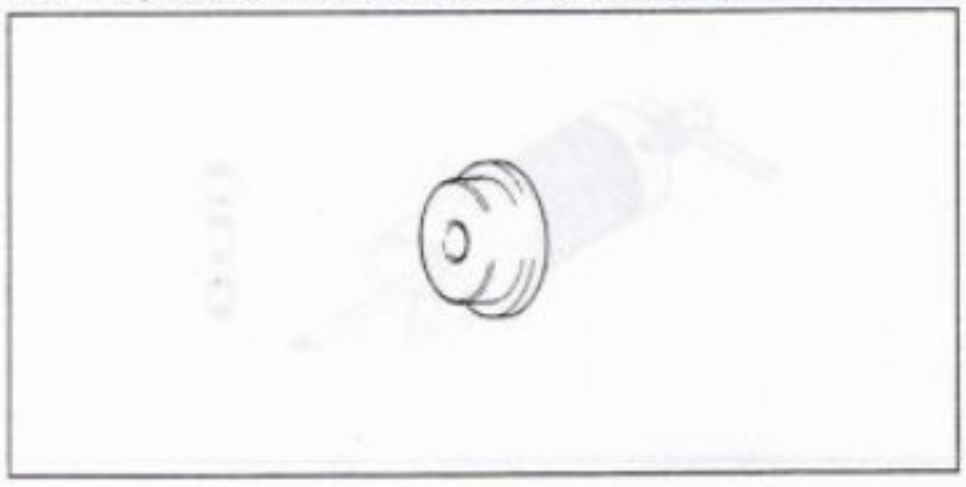

Steering Stem Nut Wrench: 57001-1100

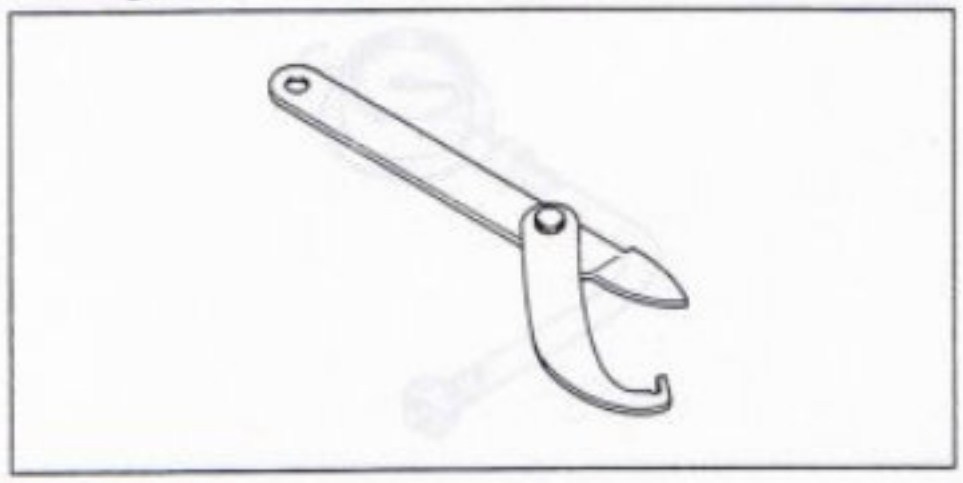

Head Pipe Outer Race Driver: 57001-1106

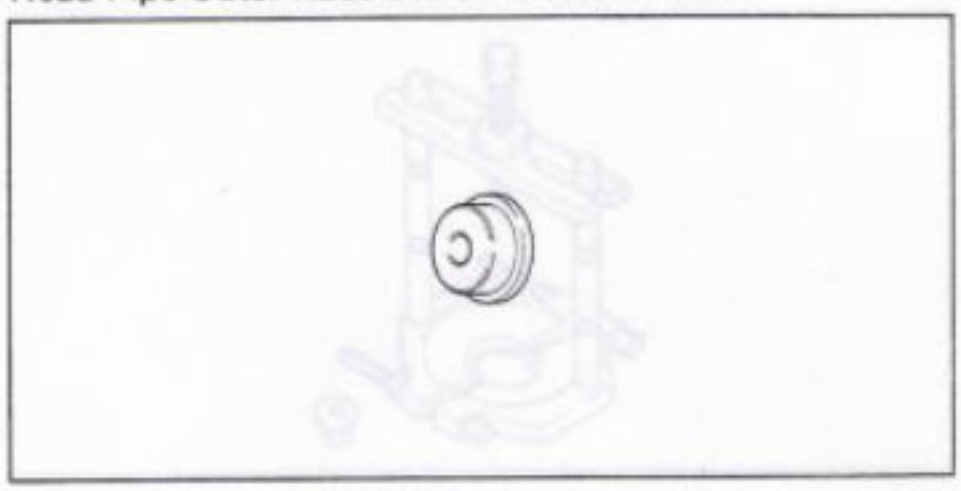

Head Pipe Outer Race Remover: 57001-1107

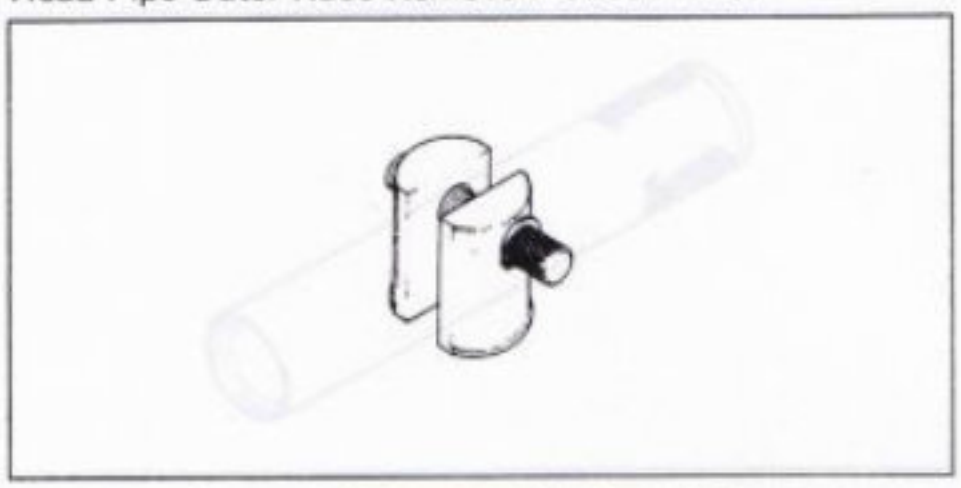

Valve Seat Cutter, 45° – Φ32: 57001-1115

Valve Seat Cutter, 45° – Φ35: 57001-1116

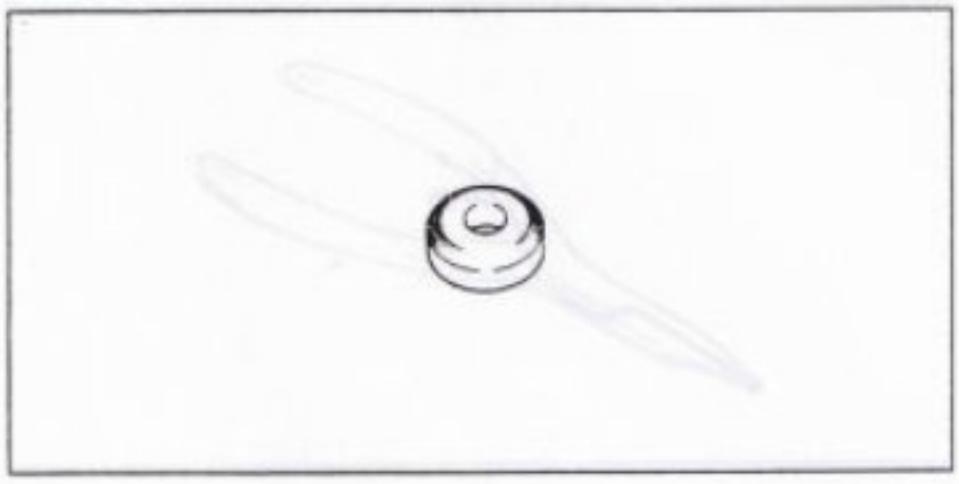

Valve Seat Cutter, 32° – Φ28: 57001-1119

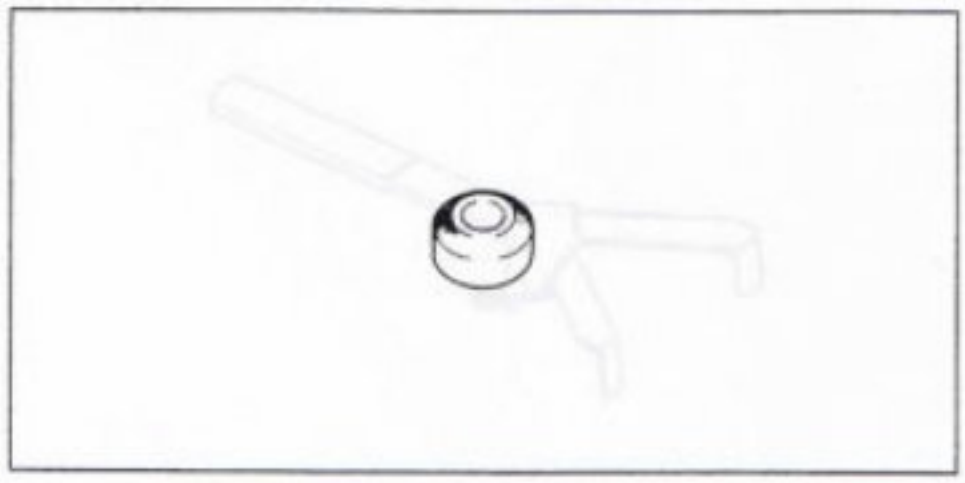

Valve Seat Cutter, 32° – Φ30: 57001-1120

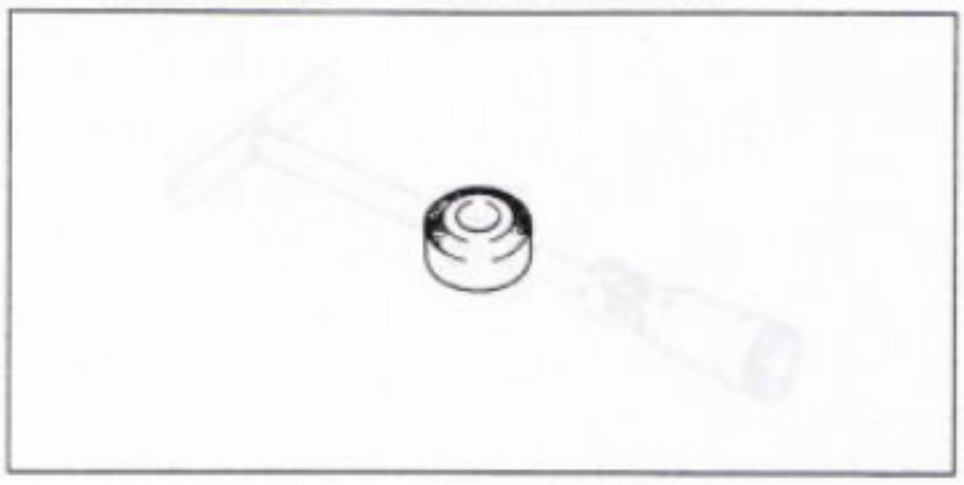

Valve Seat Cutter, 60° – Φ30: 57001-1123

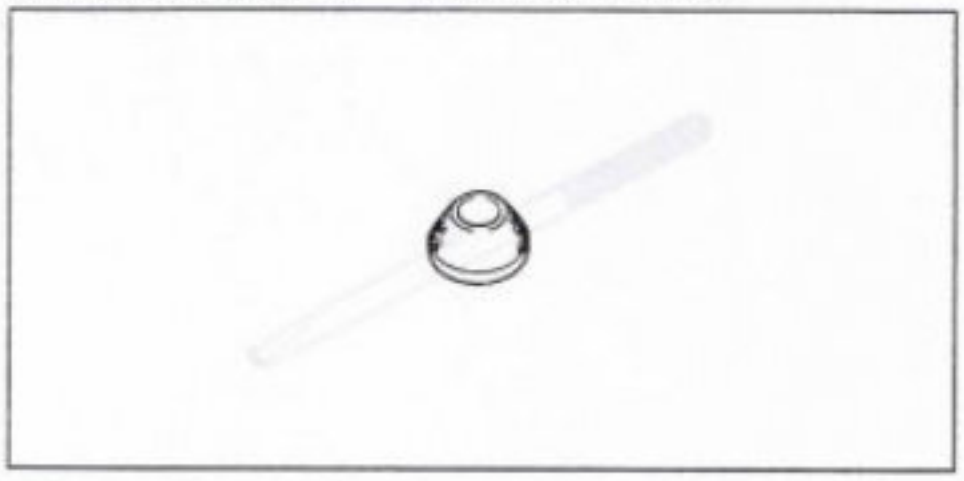

Valve Seat Cutter Holder Bar: 57001-1128

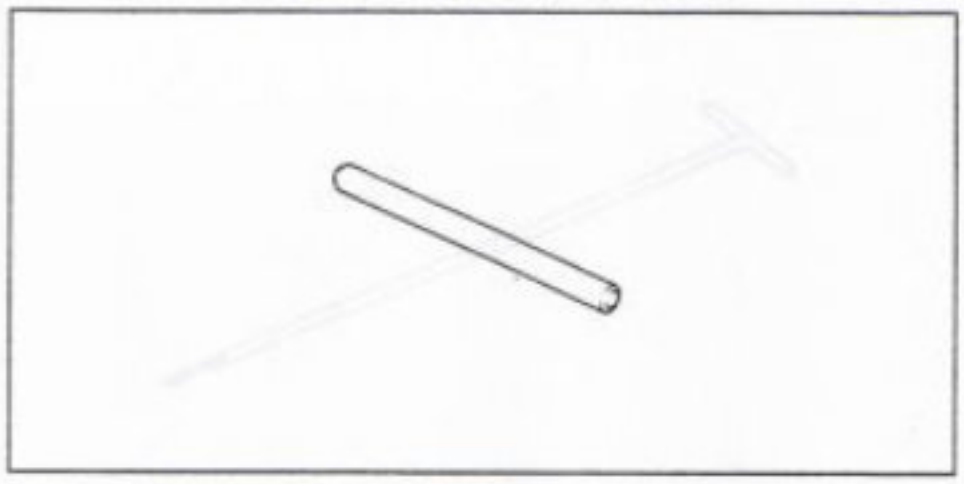

Bearing Driver Set: 57001-1129

Valve Seat Cutter, 45° – Φ30: 57001-1187

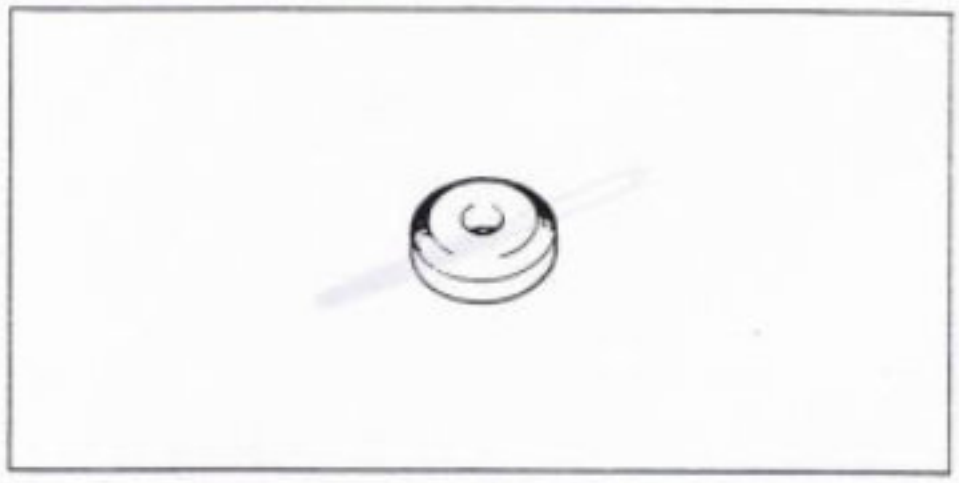

Coupling Holder: 57001-1189

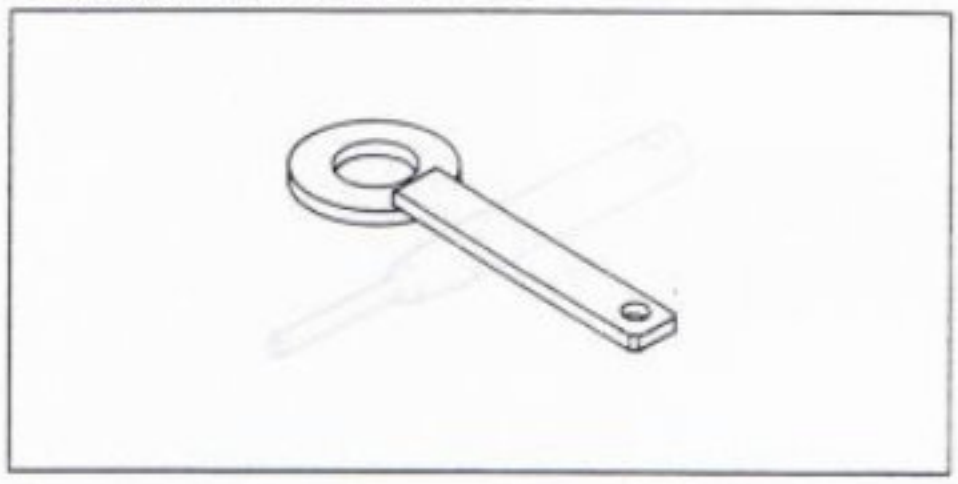

Valve Seat Cutter, 32° – Φ33: 57001-1199

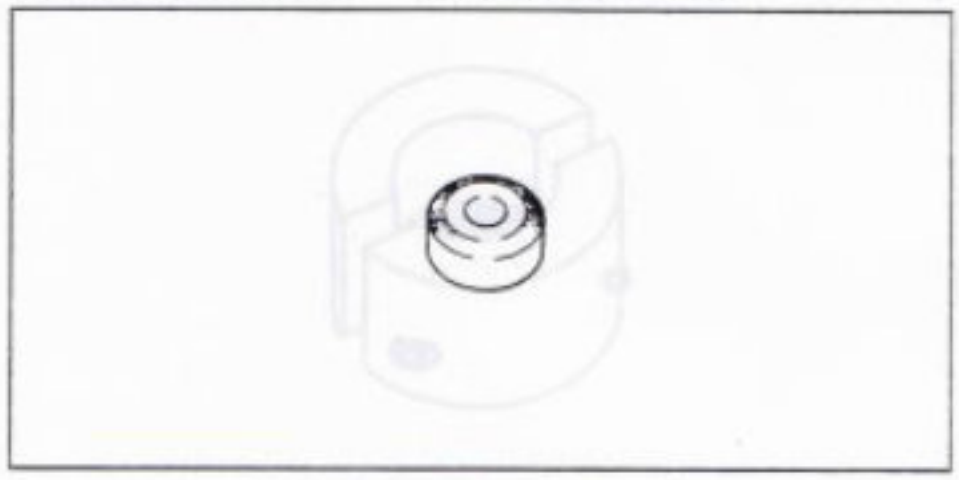

Valve Spring Compressor Adapter, Φ22: 57001-1202

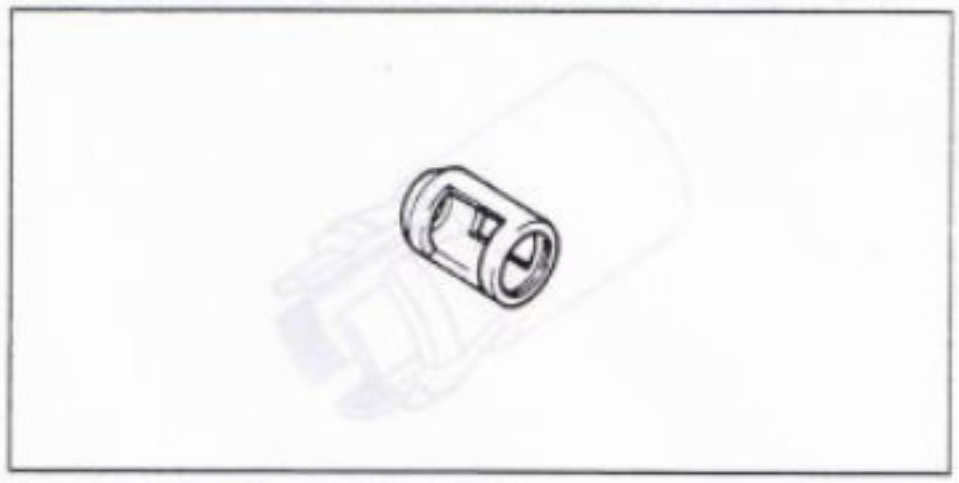

Valve Guide Arbor, Φ5: 57001-1203

Valve Guide Reamer, Φ5: 57001-1204

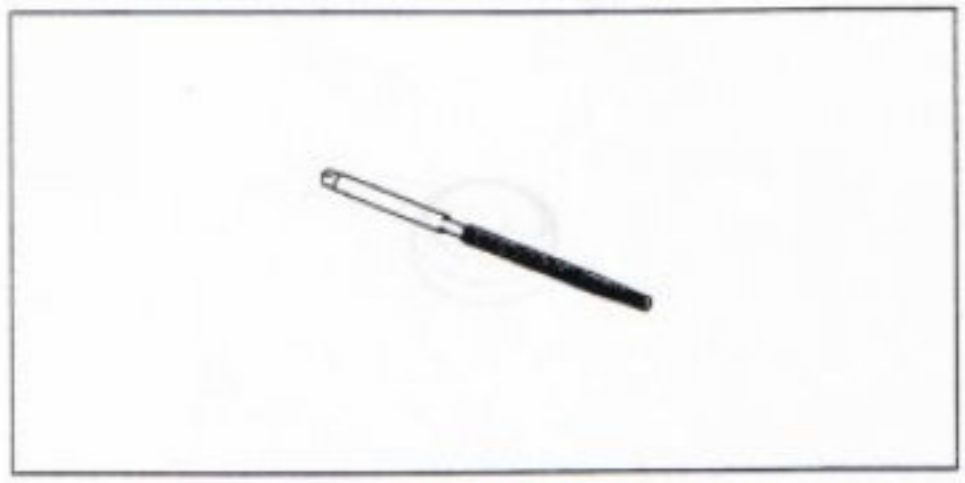

Valve Seat Cutter Holder, Φ5: 57001-1208

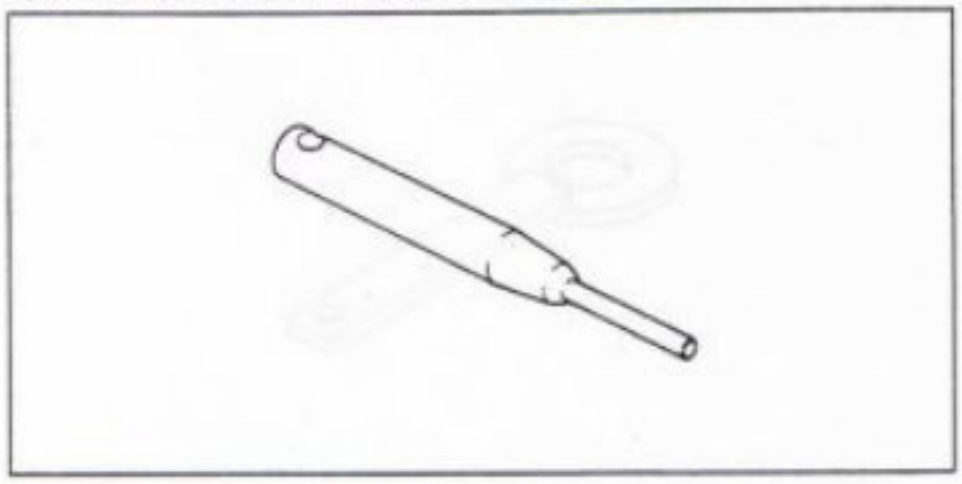

Fork Outer Tube Weight: 57001-1218

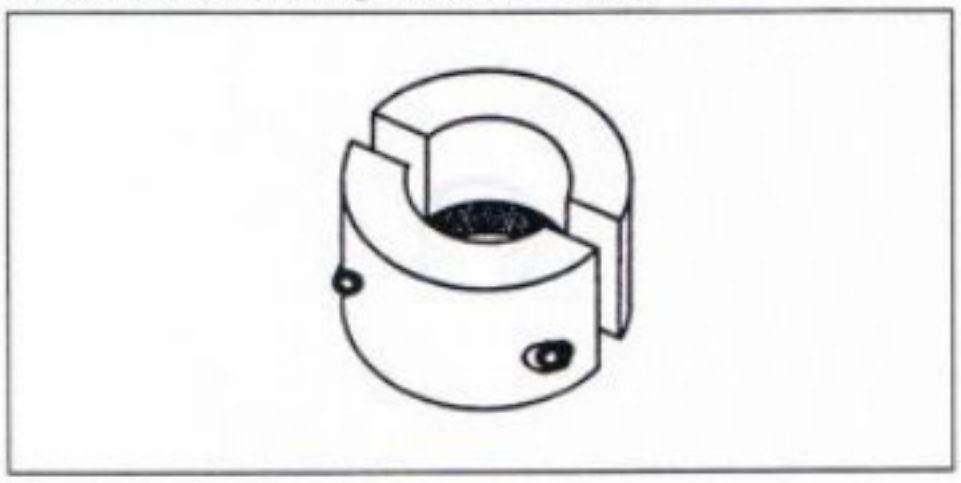

Front Fork Oil Seal Driver: 57001-1219

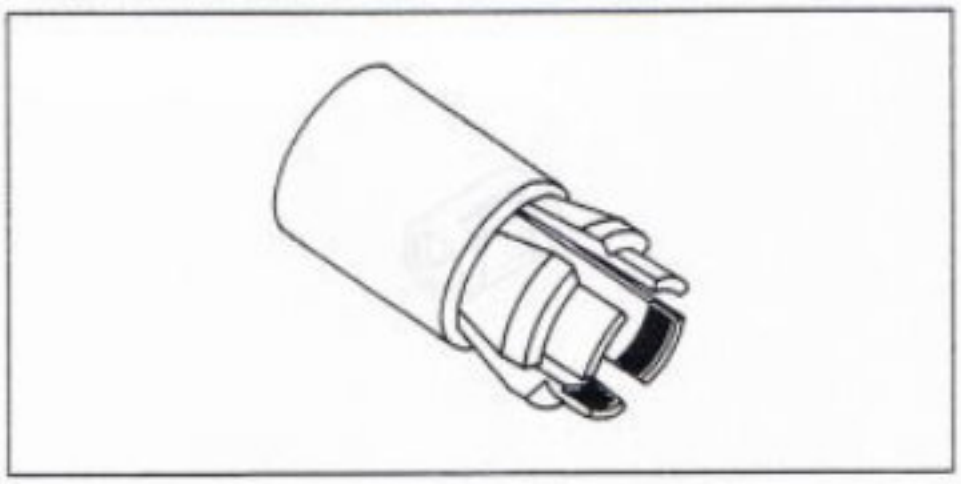

Jack: 57001-1238

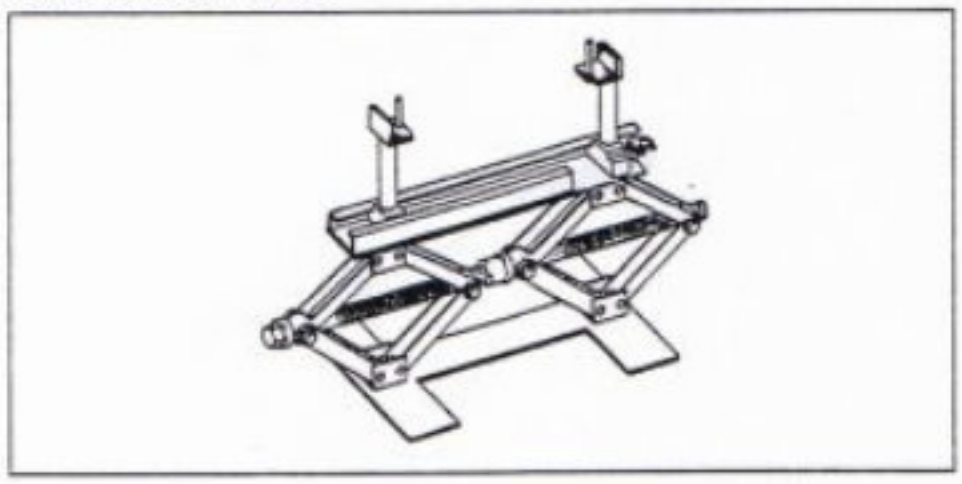

Clutch Holder: 57001-1243

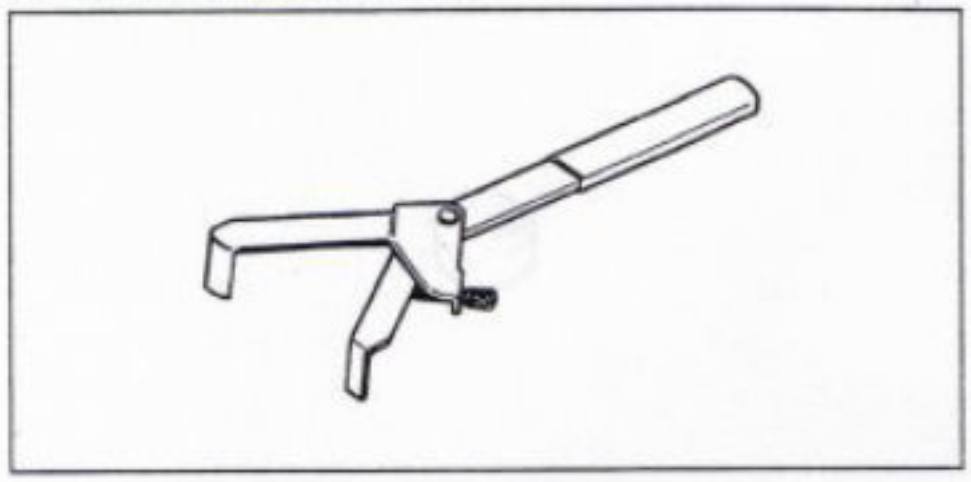

Spark Plug Wrench, Hex 16: 57001-1262

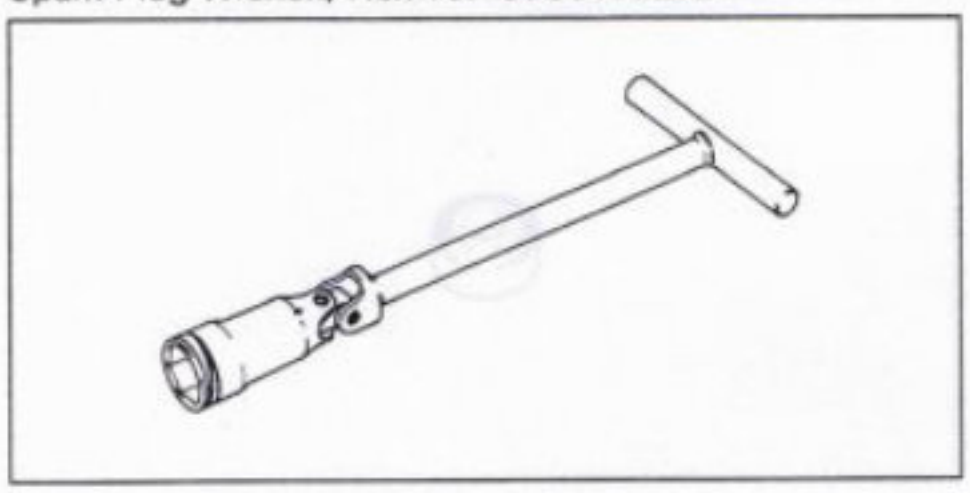

Bearing Remover Shaft, Φ9: 57001-1265

Carburetor Drain Plug Wrench, Hex 3: 57001-1269

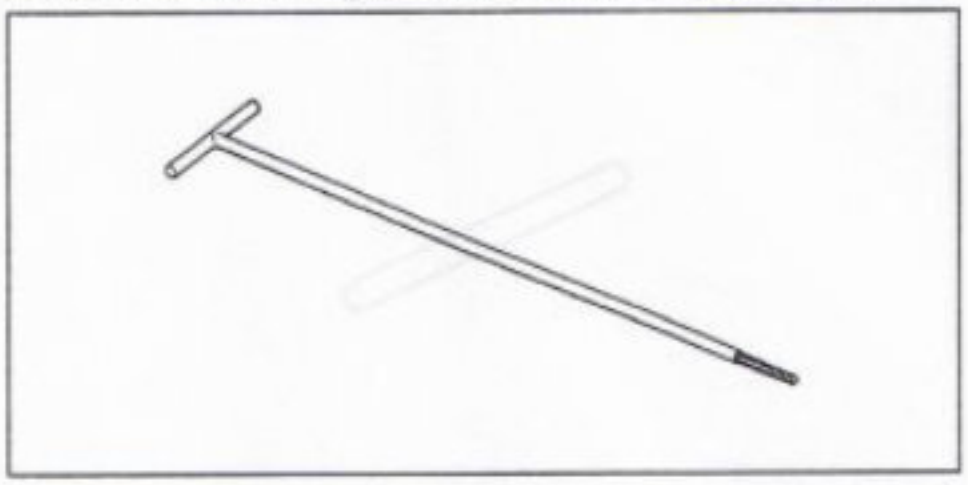

Oil Pressure Gauge Adapter, M18 x 1.5: 57001-1278

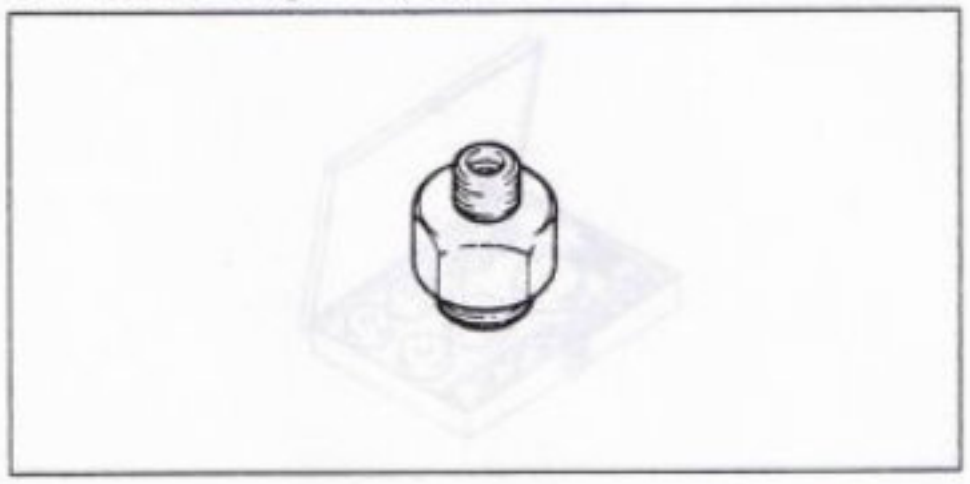

Fork Oil Level Gauge: 57001-1290

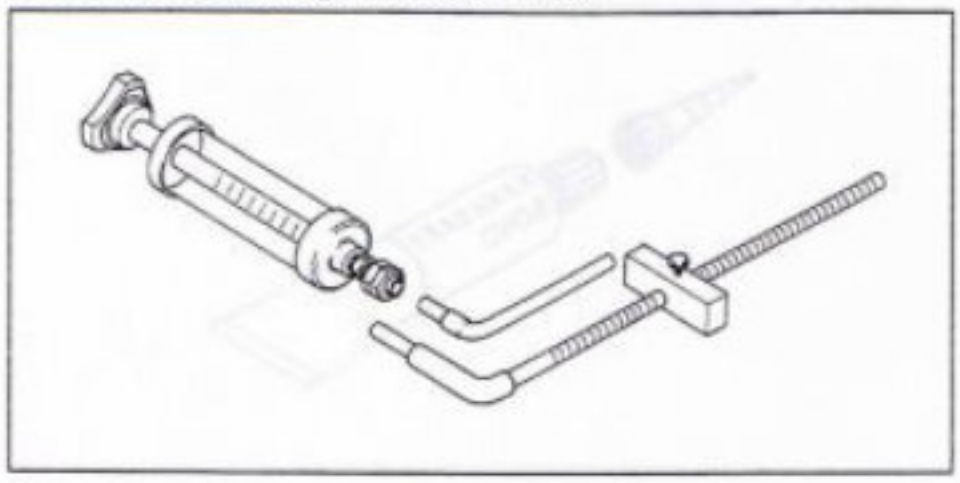

Compression Gauge Adapter, M10 X 1.0: 57001-1317

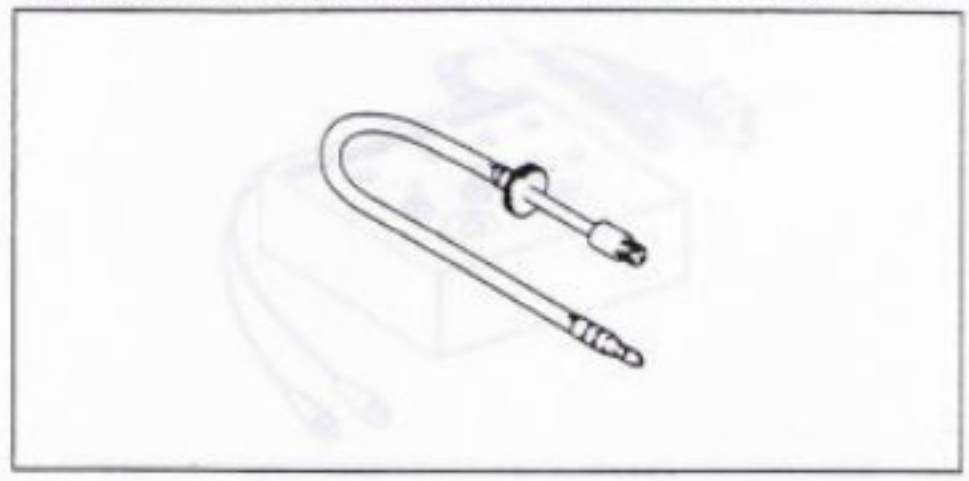

Pilot Screw Adjuster, C: 57001-1292

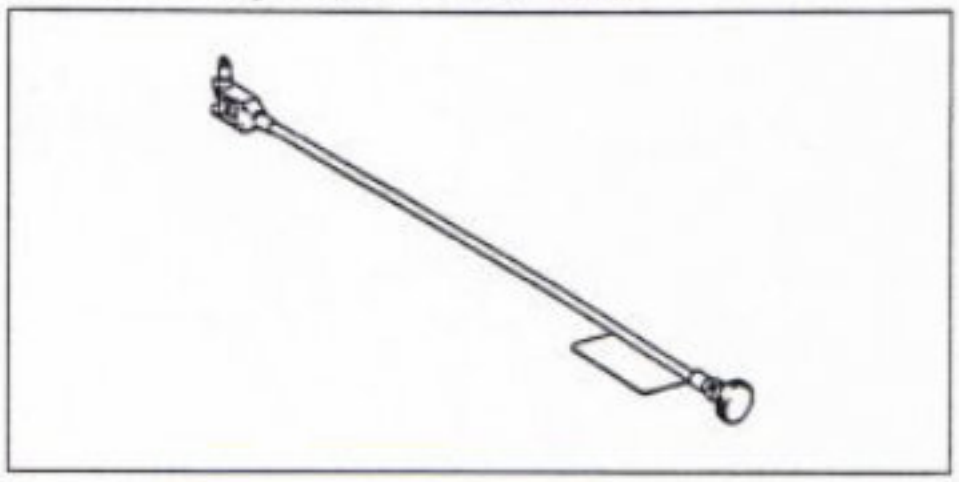

Valve Seat Cutter, 60° – Φ33: 57001-1334

Bearing Remover Head, Φ20 x Φ22: 57001-1293

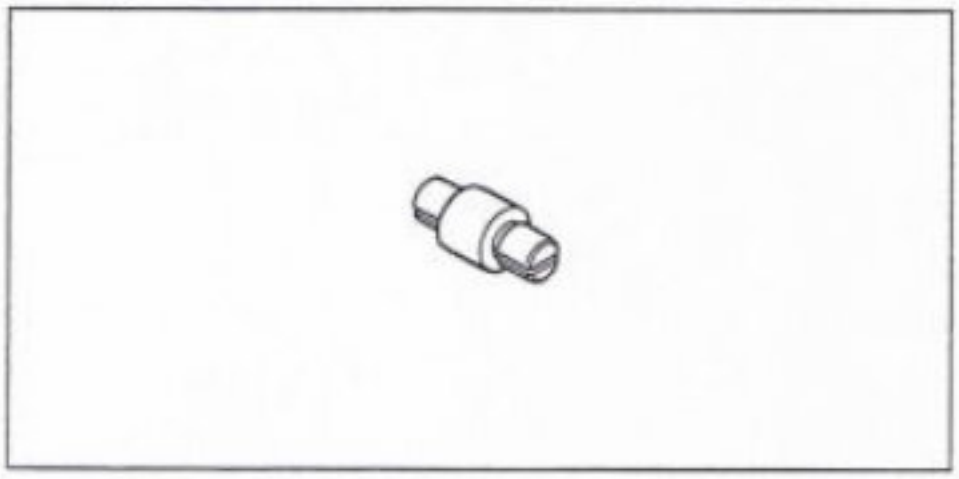

Bearing Remover Head, Φ25 x Φ28: 57001-1346

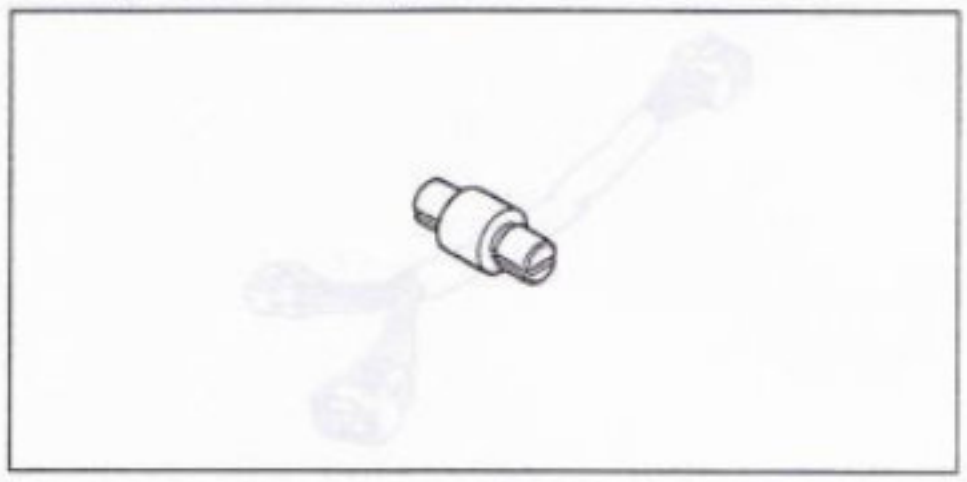

Fork Cylinder Holder: 57001-1297

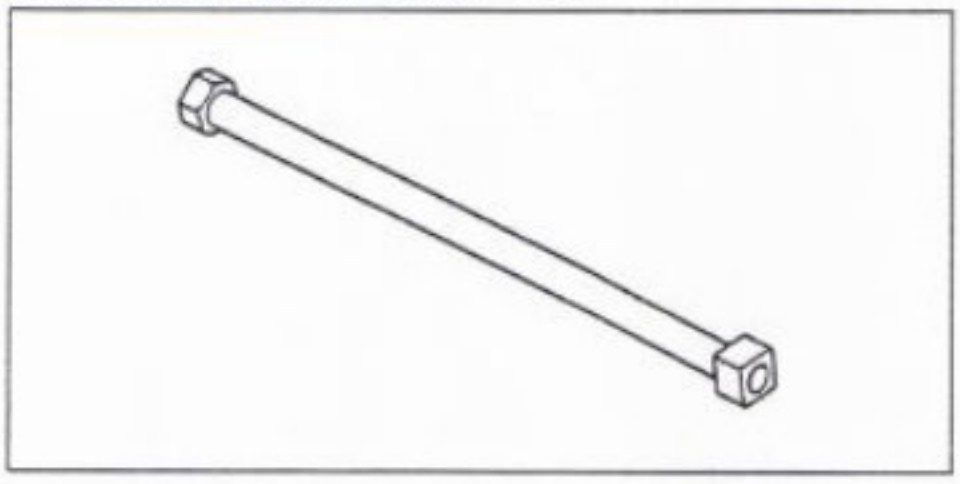

Pilot Screw Adjuster Adapter, Φ5: 57001-1372

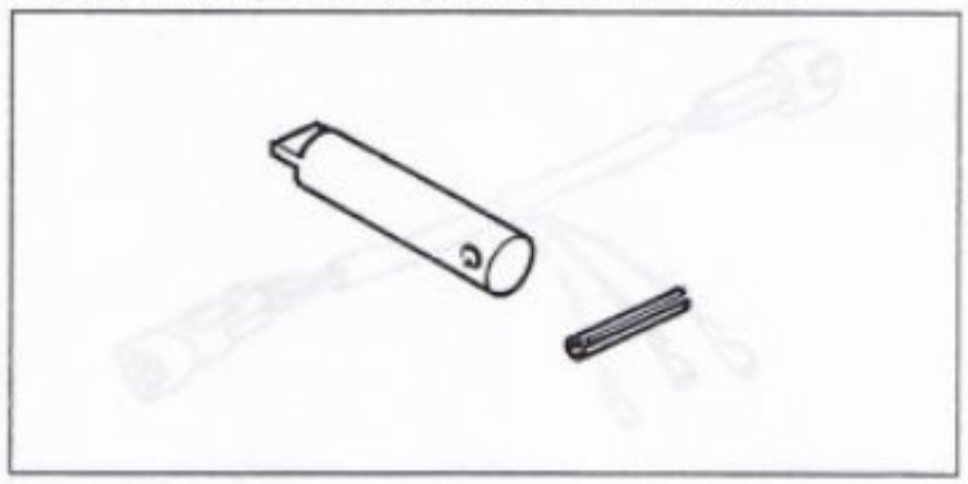

Fork Piston Rod Puller, M10 x 1.0: 57001-1298

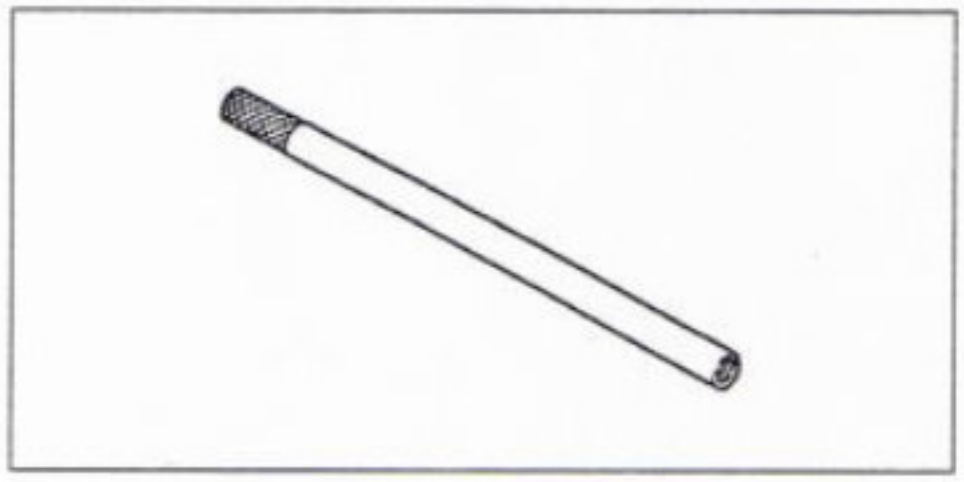

Pilot Screw Adjuster Driver: 57001-1373

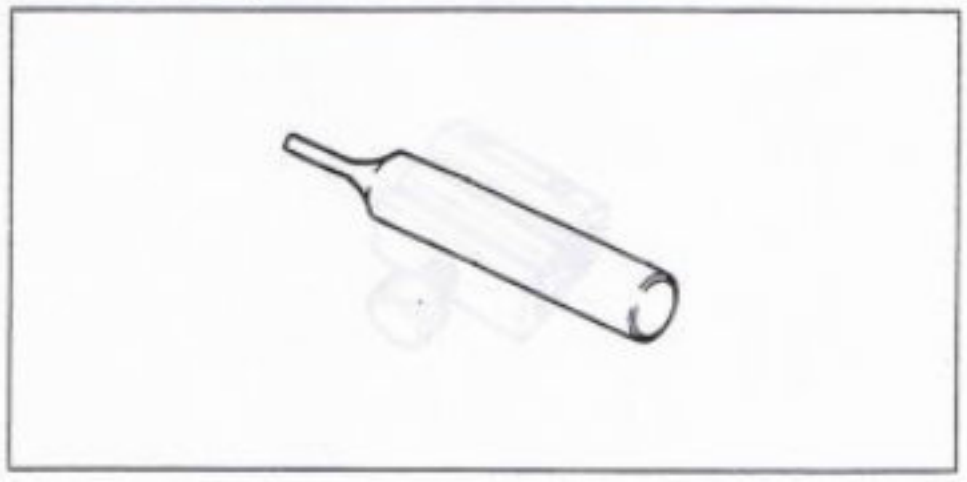

Igniter Checker Assembly: 57001-1378

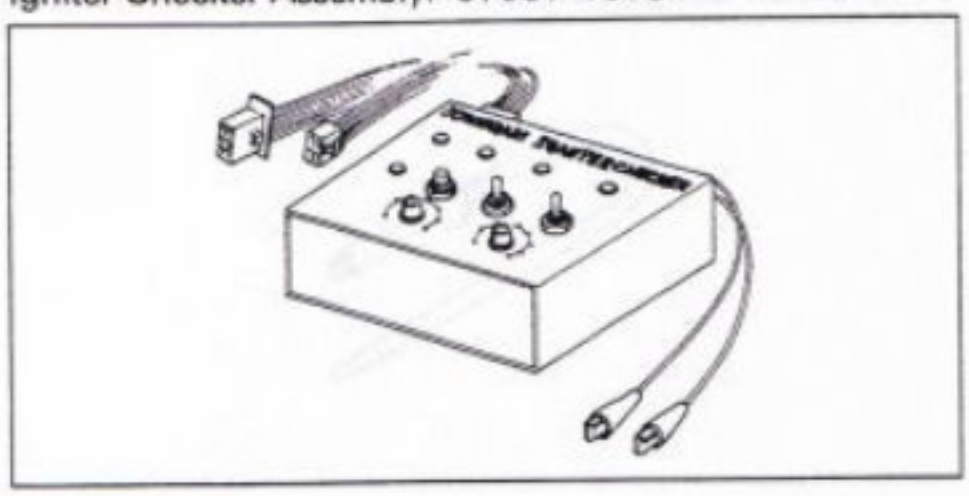

Kawasaki Bond (Silicone Sealant): 56019-120

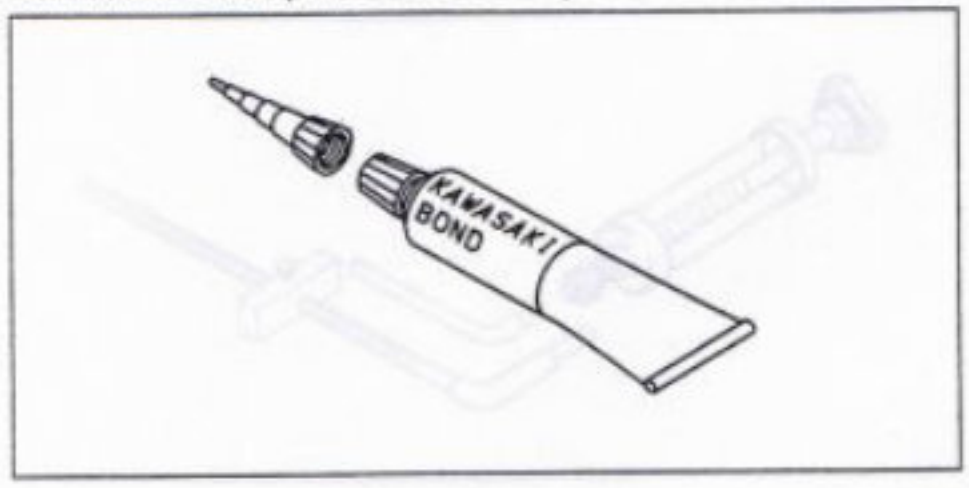

Hand Tester: 57001-1394

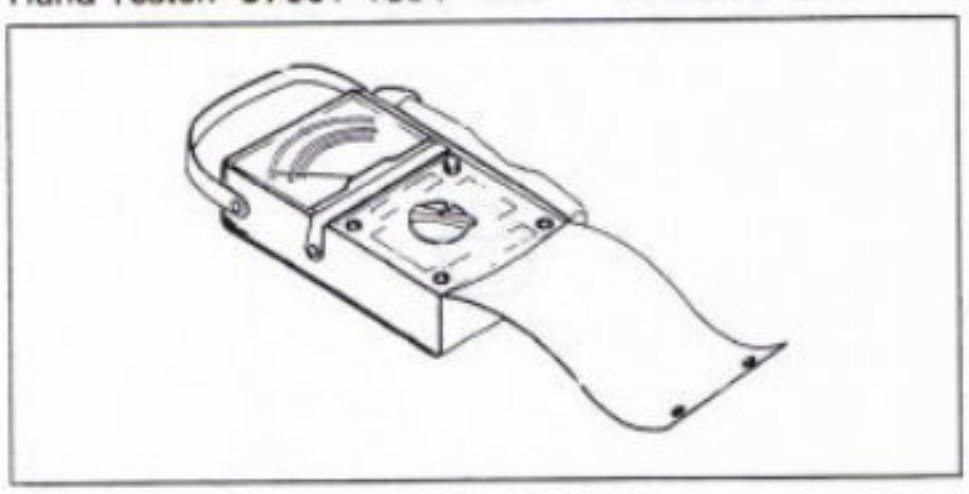

Harness Adapter #13: 57001-1399

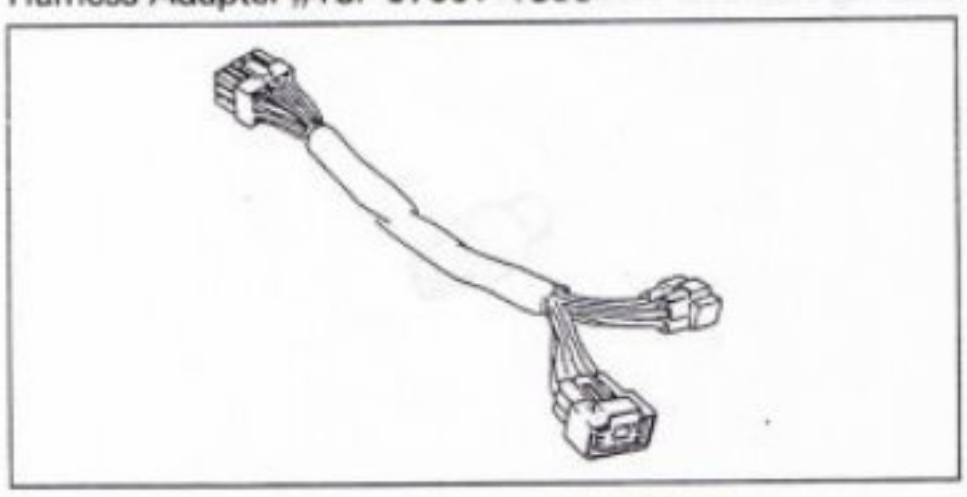

Throttle Sensor Setting Adapter: 57001-1400

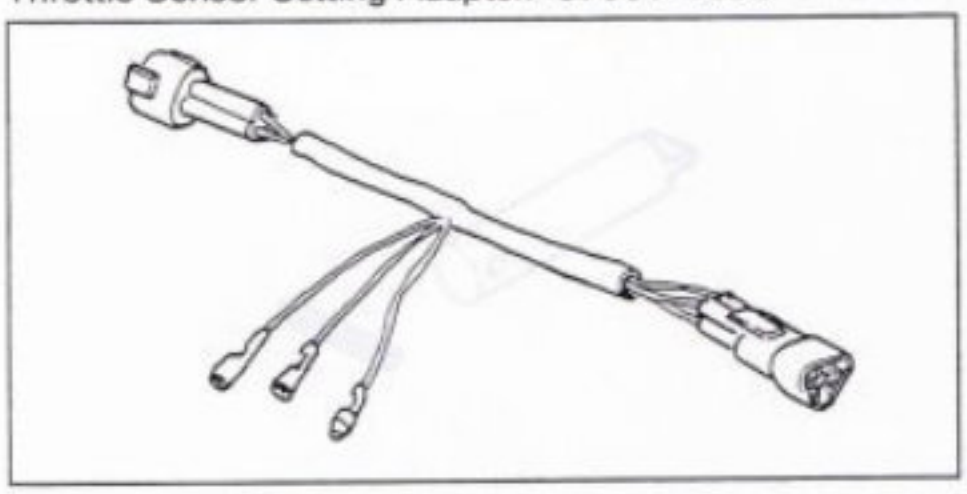

Pressure Cable Luber: k56019-021

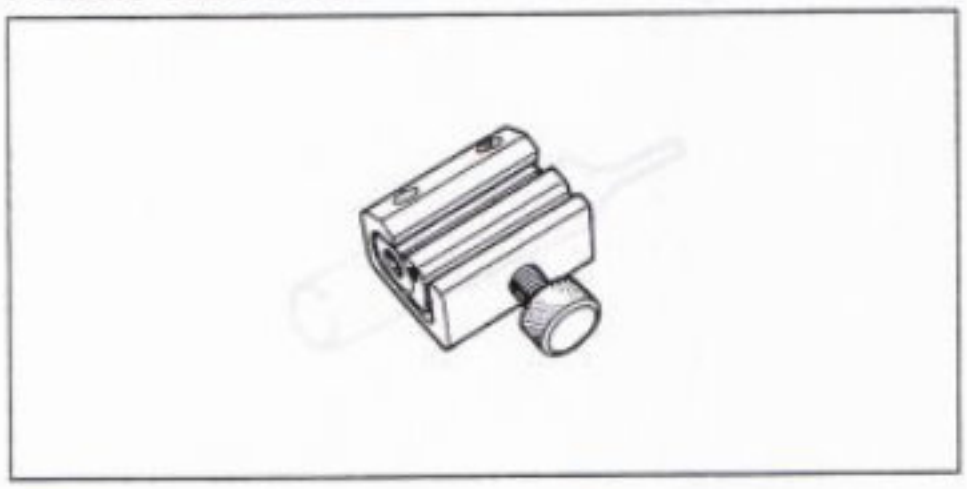

Cable, Wire, and Hose Routing

ZR1100C:

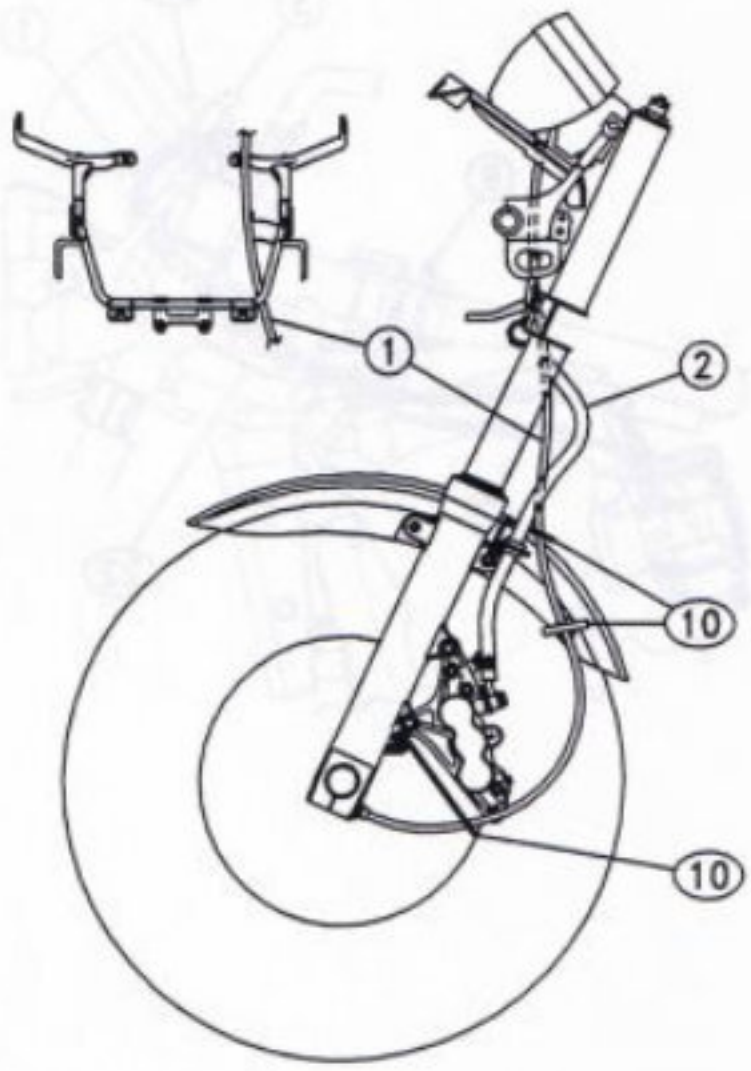

ZR1100D:

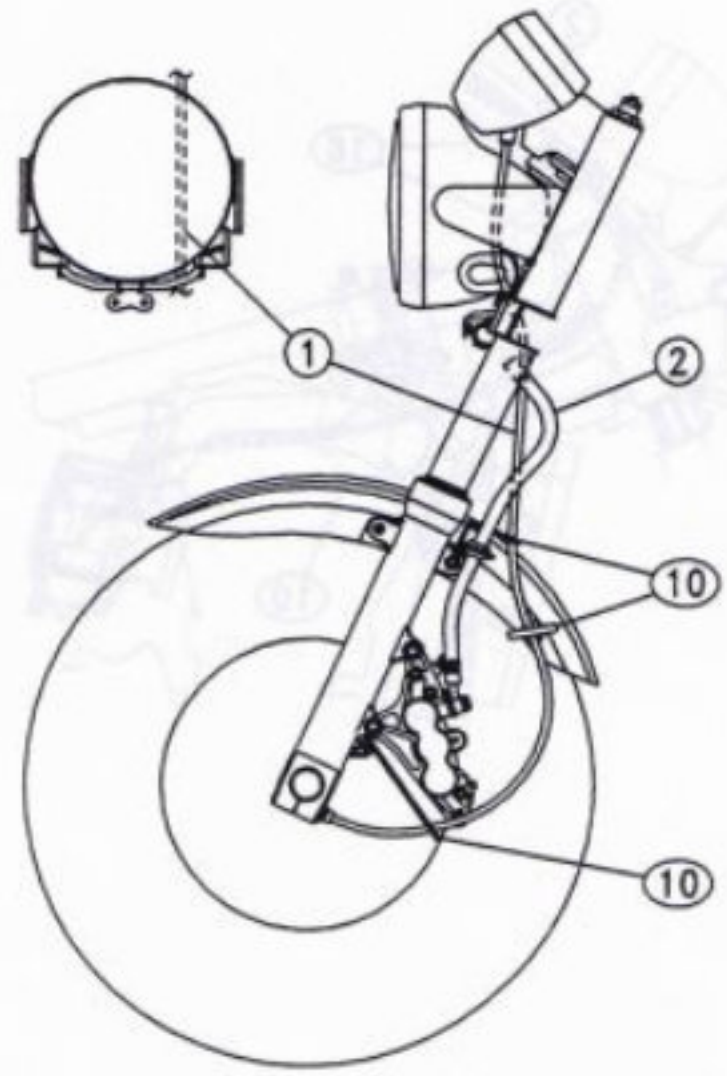

ZR1100D:

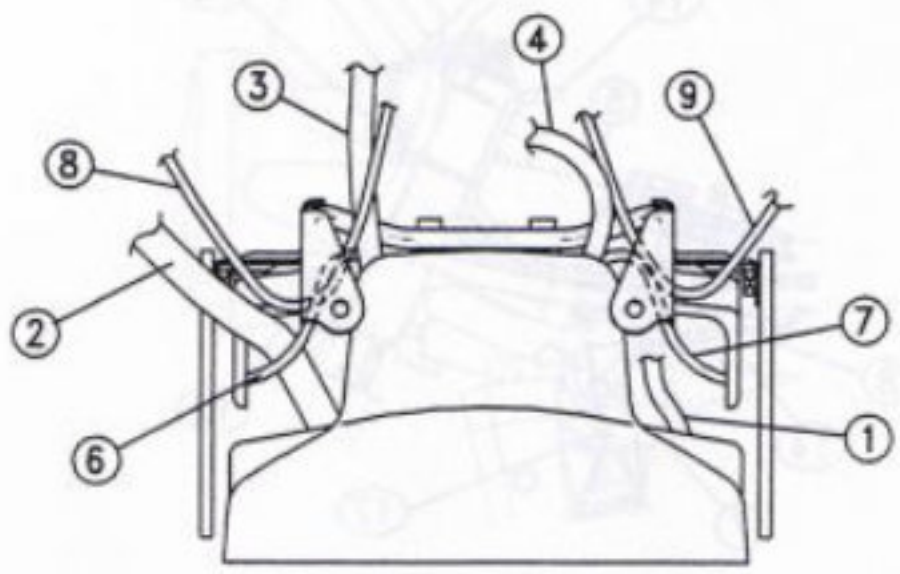

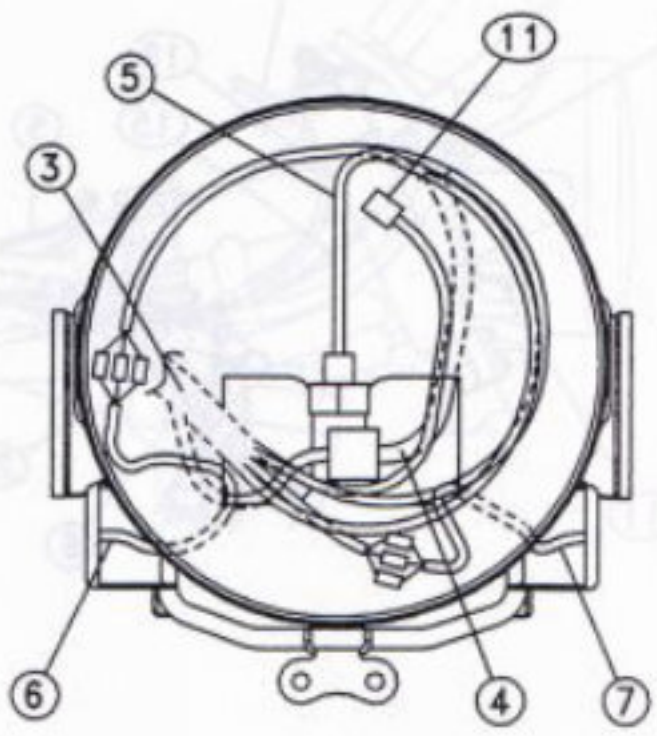

1. Speedometer Cable
2. Brake Hose
3. Main Harness
4. Meter Lead
5. Headlight Lead
6. Front Right Turn Signal Light Lead
7. Front Left Turn Signal Light Lead
8. Right Handlebar Switch Lead
9. Left Handlebar Switch Lead
10. Clamp
11. City Light Lead

ZR1100C:

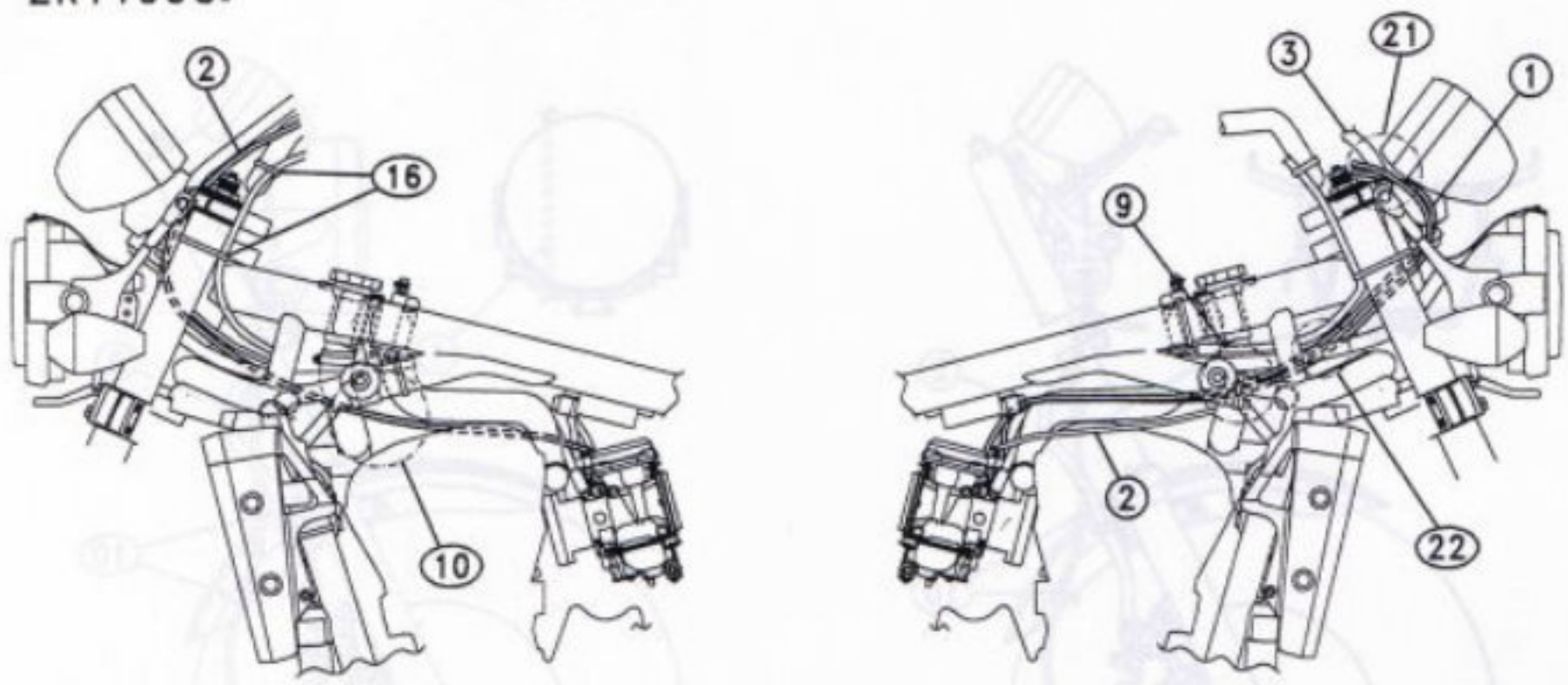

ZR1100D:

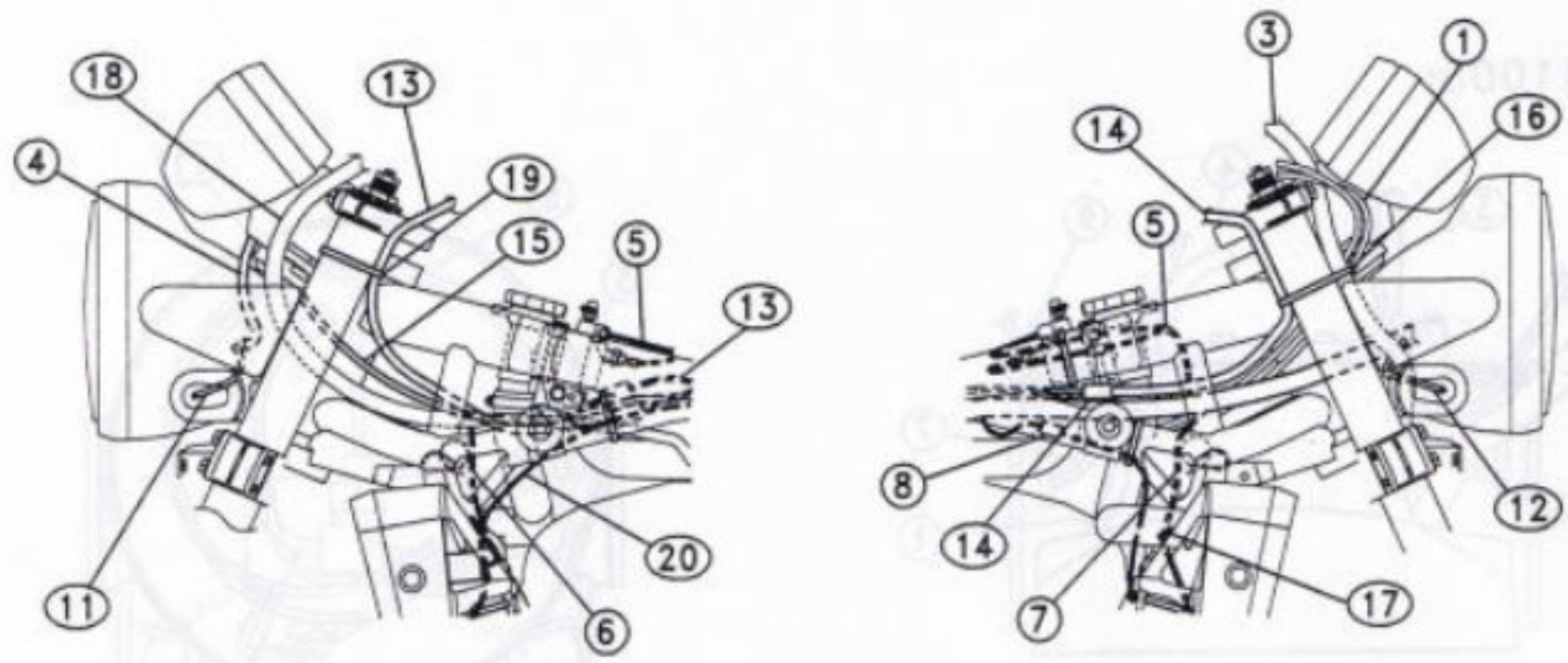

1. Throttle Cables
2. Choke Cable
3. Brake Hose
4. Meter Lead
5. Water Temperature Switch Lead
6. Left Horn Lead
7. Right Horn Lead
8. Fan Motor Lead
9. Throttle Cables (Run the cables right side the water hose.)
10. Choke Cable (Run the cable left side the water hose.)
11. Front Left Turn Signal Light Lead
12. Front Right Turn Signal Light Lead
13. Left Handlebar Switch Lead
14. Right Handlebar Switch Lead
15. Ignition Switch Lead
16. Band
17. Clamp
18. Clutch Hose
19. Band (Do not tighten the clutch hose.)
20. Radiator Fan Switch Lead
21. Throttle Cables (Run the cables outside the brake hose.)
22. Throttle Cables (Run the cables inside the main harness.)

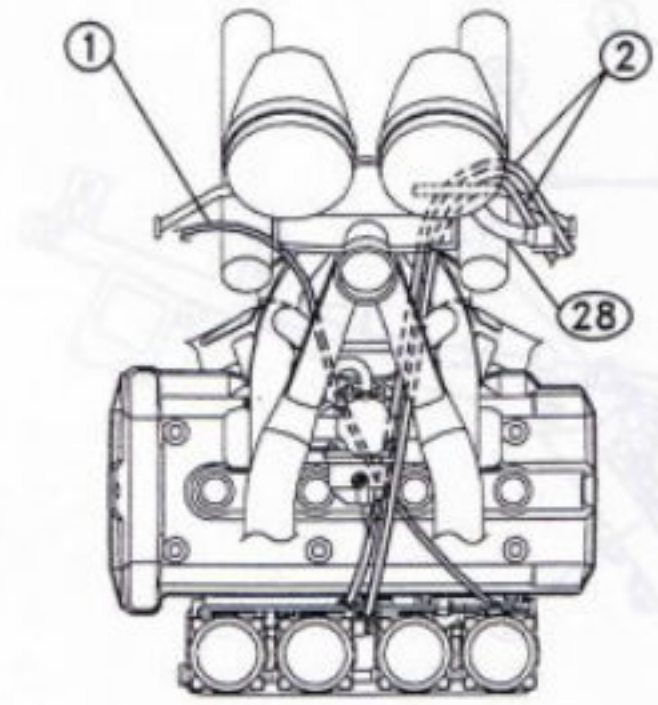

ZR1100D:

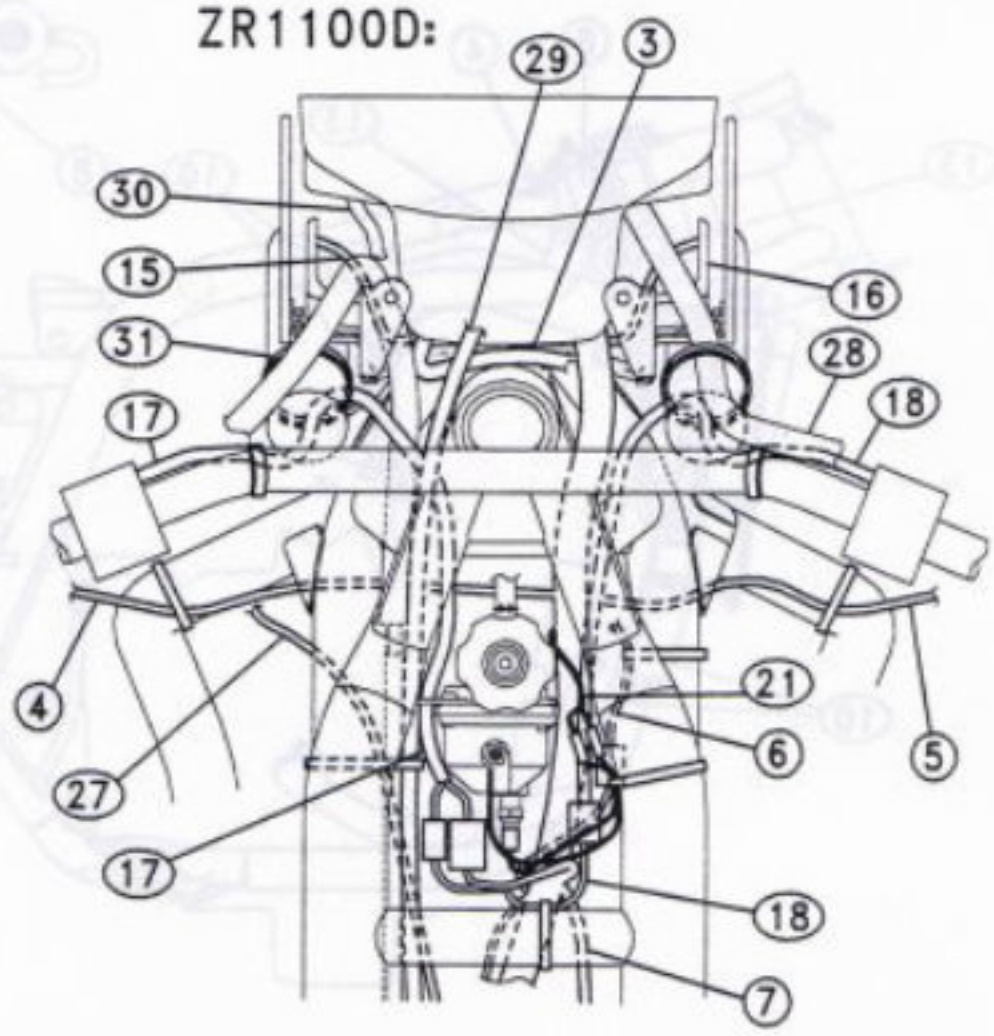

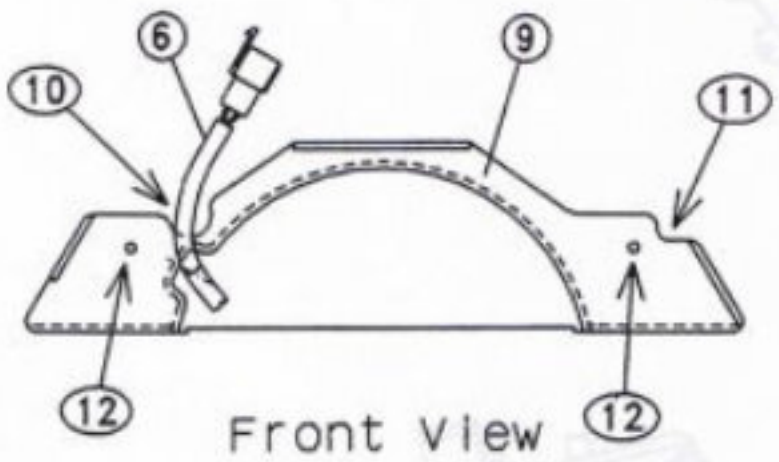

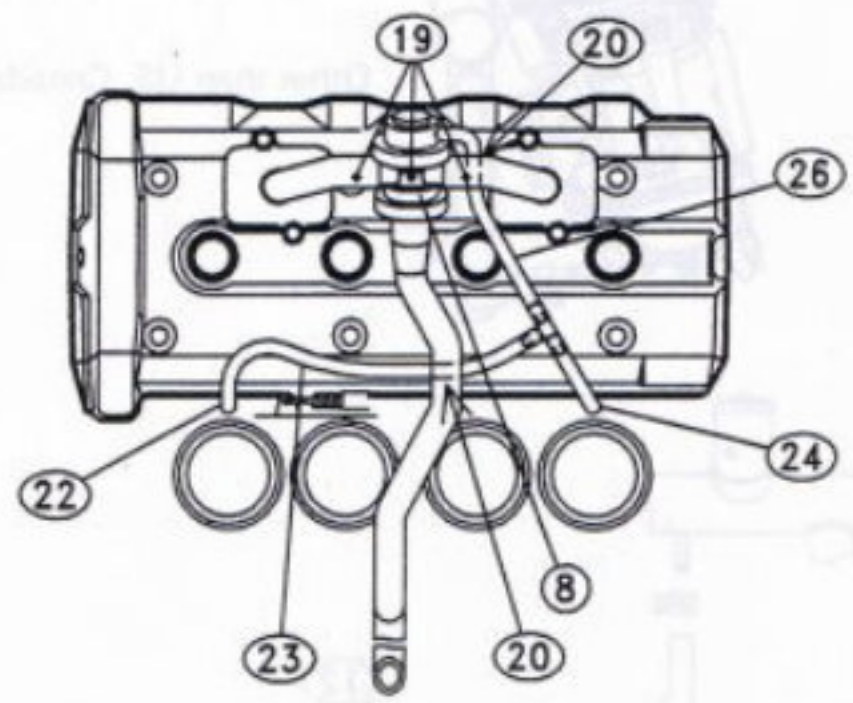

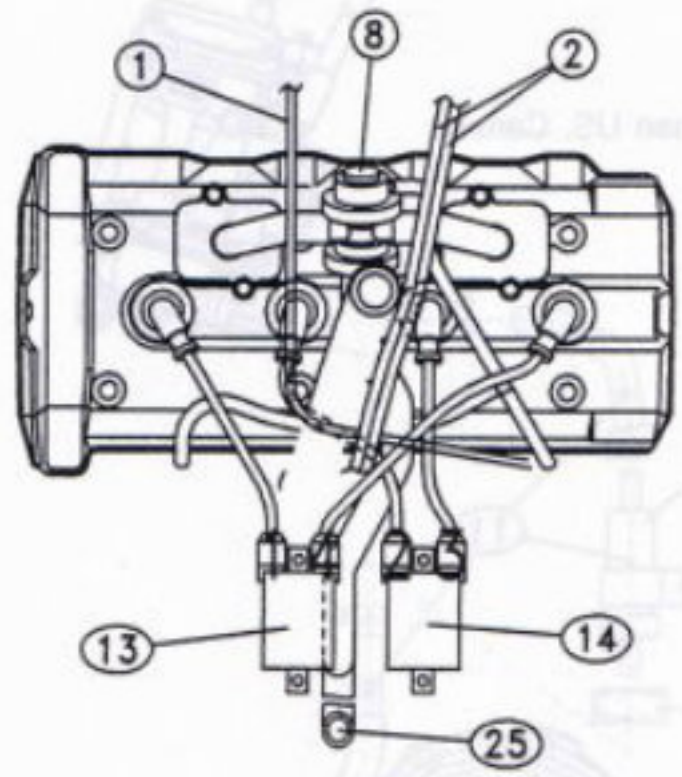

1. Choke Cable
2. Throttle Cables
3. Meter Lead
4. Left Horn Lead
5. Right Horn Lead
6. Fan Motor Lead
7. Chassis Ground Lead
8. Vacuum Switch Valve
9. Baffle Plate
10. Recess for Fan Motor Lead
11. Recess for Fan Switch Lead
12. Hole for Horn Lead Clamp
13. #1, #4 Ignition Coil
14. #2, #3 Ignition Coil
15. Front Left Turn Signal Light Lead
16. Front Right Turn Signal Light Lead (Run the lead rear side the brake hose.)
17. Left Handlebar Switch Lead
18. Right Handlebar Switch Lead
19. Align the marks on the hoses and vacuum switch valve
20. Run the vacuum hose under the vacuum switch valve hose.
21. Water Temperature Switch Lead
22. To #1 Carburetor
23. Run the vacuum hose under the throttle cables.
24. To #4 Carburetor
25. To Air Cleaner
26. Vacuum Hose
27. Fan Switch Lead
28. Brake Hose
29. Igniton Switch Lead
30. Speedometer Cable
31. Clutch Hose

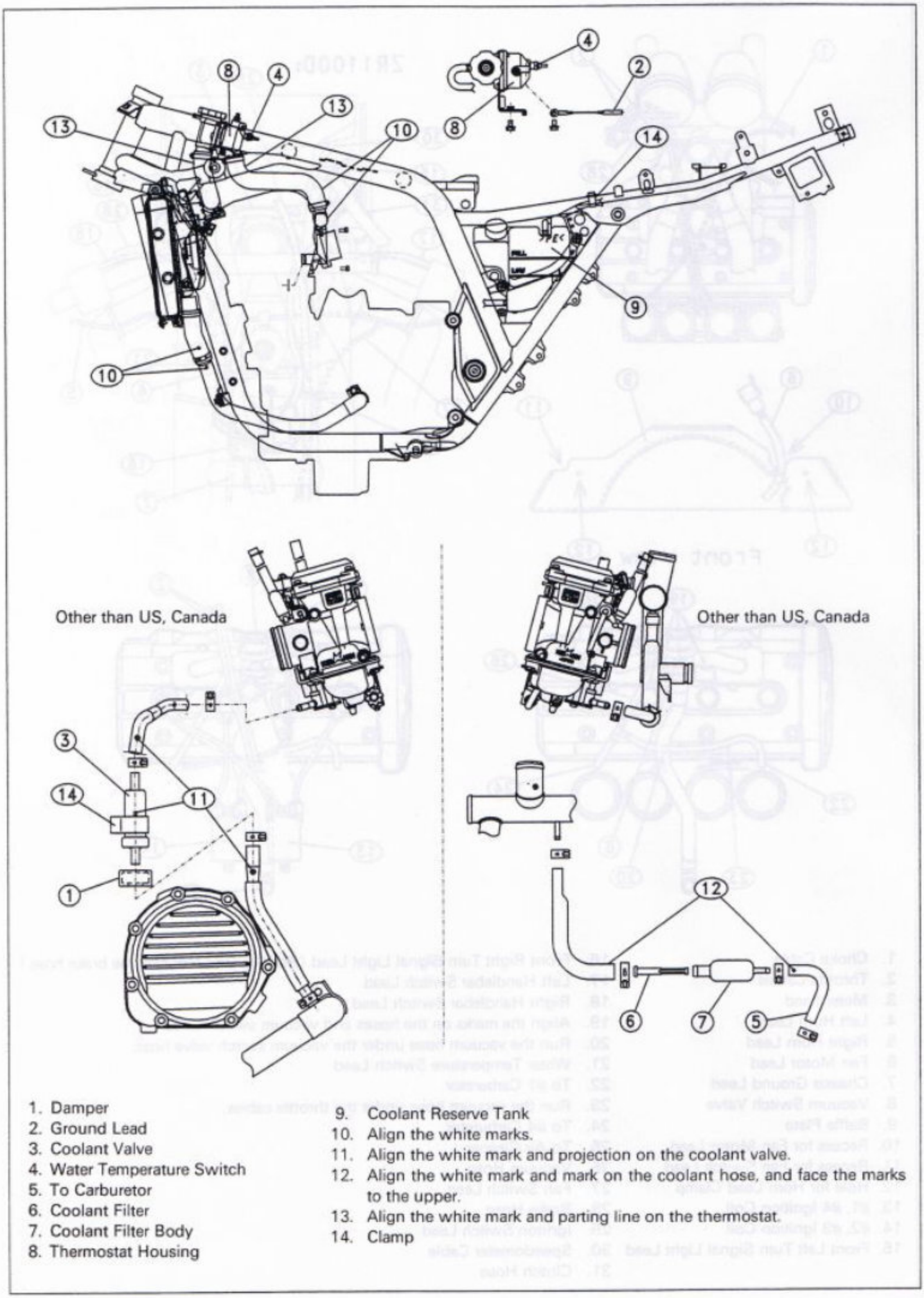

1. Damper
2. Ground Lead
3. Coolant Valve
4. Water Temperature Switch
5. To Carburetor
6. Coolant Filter
7. Coolant Filter Body
8. Thermostat Housing
9. Coolant Reserve Tank
10. Align the white marks.
11. Align the white mark and projection on the coolant valve.
12. Align the white mark and mark on the coolant hose, and face the marks to the upper.
13. Align the white mark and parting line on the thermostat.
14. Clamp

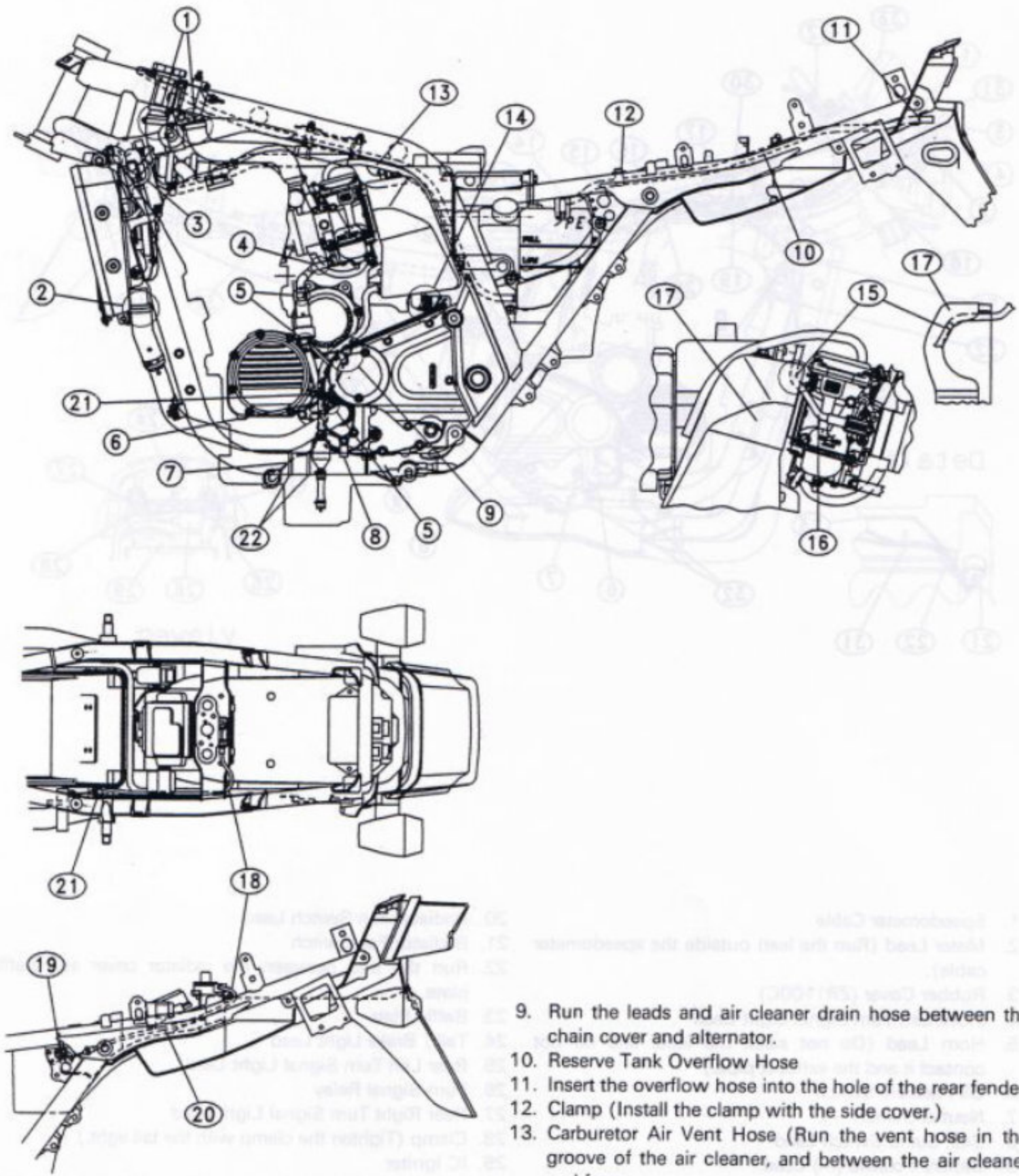

1. Tighten the clamp screw at the front side.
2. Tighten the clamp screw at the inside.
3. Radiator Fan Switch Lead
4. Run the fuel hose inside the water hose.
5. Tighten the clamp screw at the rear side, and face it to outside a little.
6. Pickup Coil Lead
7. Oil Pressure Switch Lead (Band the lead to the left down tube.)
8. Clamp (Neutral Switch Lead, Side Stand Switch Lead)
9. Run the leads and air cleaner drain hose between the chain cover and alternator.
10. Reserve Tank Overflow Hose
11. Insert the overflow hose into the hole of the rear fender.
12. Clamp (Install the clamp with the side cover.)
13. Carburetor Air Vent Hose (Run the vent hose in the groove of the air cleaner, and between the air cleaner and frame.
14. Clamp (Face the clamp screw to outside.)
15. Throttle Sensor Lead (Run the lead in the notch of the air cleaner side cover.)
16. Throttle Sensor Lead
17. Air Cleaner Side Cover
18. Seat Lock Cable
19. Seat Lock
20. Do not pinch the cable by the rear fender.
21. Clamp
22. Band

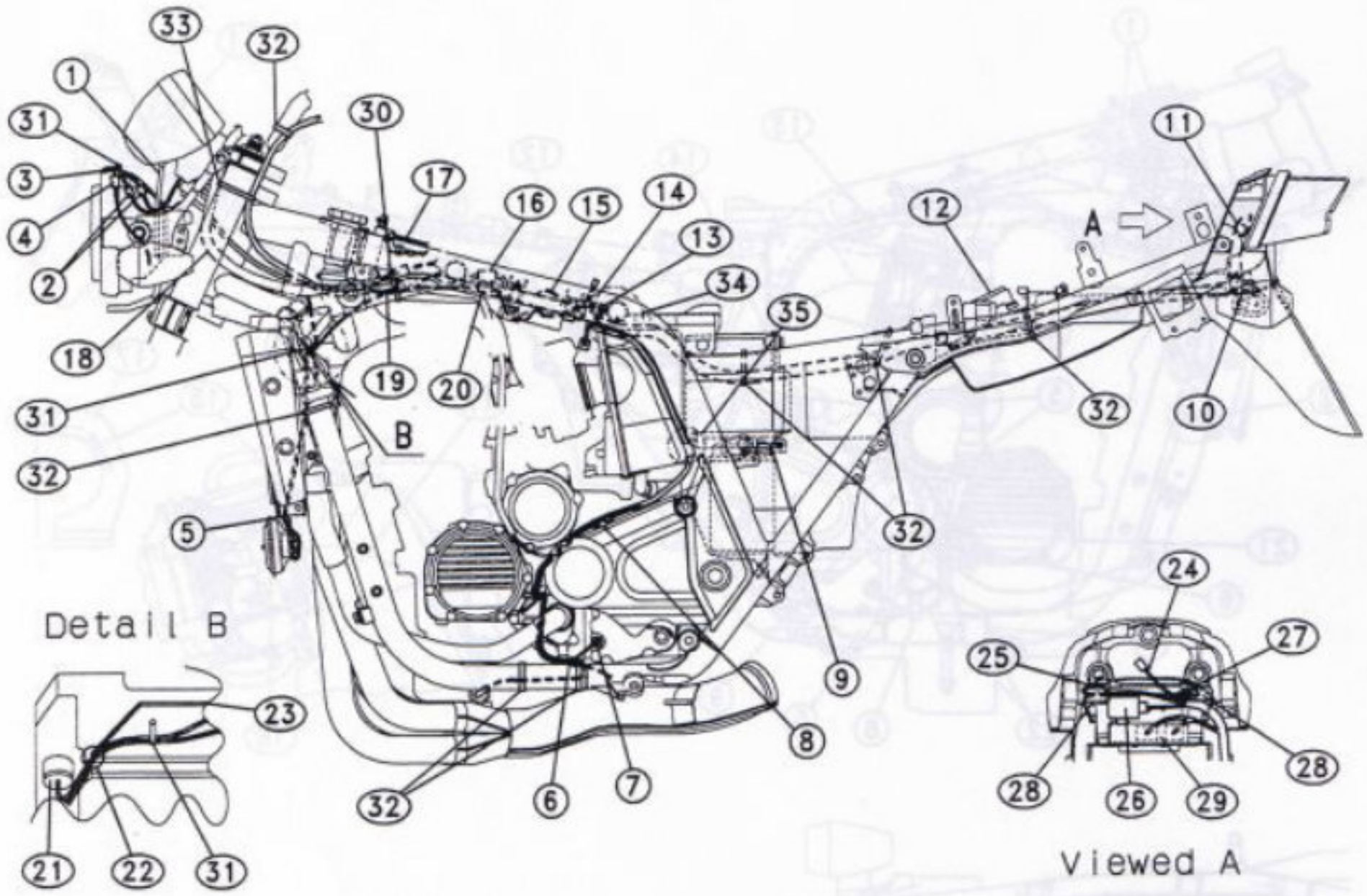

1. Speedometer Cable
2. Meter Lead (Run the lead outside the speedometer cable).
3. Rubber Cover (ZR1100C)
4. Front Left Turn Signal Light Lead
5. Horn Lead (Do not slack the lead, and do not contact it and the exhaust pipe.)
6. Oil Pressure Switch
7. Neutral Switch
8. Side Stand Switch Lead
9. Battery Positive (+) Lead
10. IC Igniter Lead
11. Clamp (Turn Signal Relay / Rear Turn Signal Light / Tail / Brake Light Leads)
12. Junction Box
13. Pickup Coil Lead
14. Alternator Lead
15. #1,#4 Ignition Coil
16. Ignition Switch Lead
17. Water Temperature Switch
18. Clutch Hose
19. Left Handlebar Switch Lead
20. Radiator Fan Switch Lead
21. Radiator Fan Switch
22. Run the lead between the radiator cover and baffle plate.
23. Baffle Plate
24. Tail / Brake Light Lead
25. Rear Left Turn Signal Light Lead
26. Turn Signal Relay
27. Rear Right Turn Signal Light Lead
28. Clamp (Tighten the clamp with the tail light.)
29. IC Igniter
30. Band (Ignition Switch Lead, Left Handlebar Switch Lead, Clutch Hose)
31. Clamp
32. Band
33. Band (Don ot tighten the clutch hose).
34. Do not pinch the connectors of the alternator lead and pickup coil lead between the cross pipe and air cleaner.)
35. Run the side stand switch, neutral switch and oil pressure switch leads inside the pin.

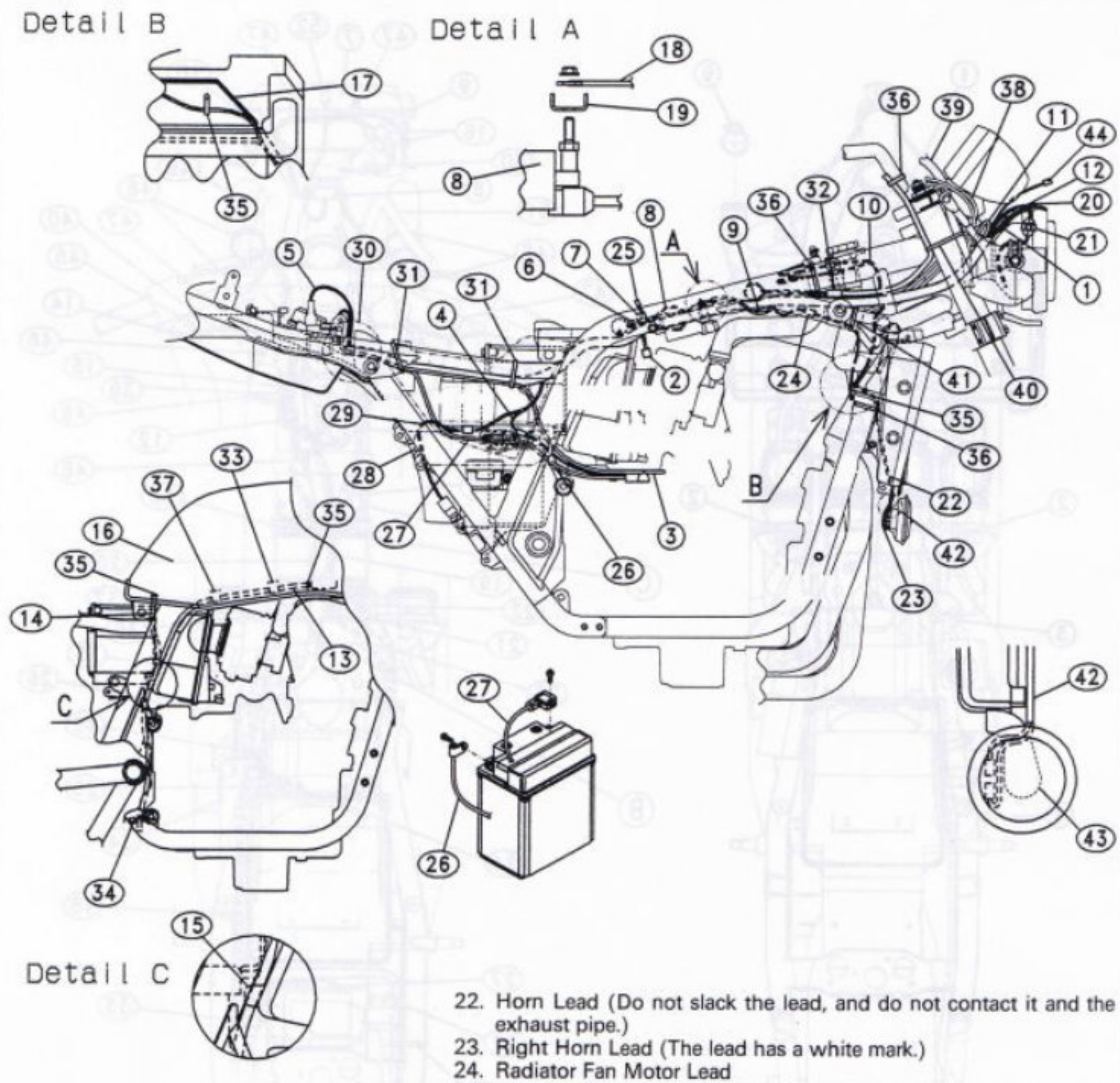

1. Rubber Cover (ZR1100C)
2. Throttle Sensor Lead
3. Starter Motor Lead
4. Battery Ground Lead
5. Starter Relay Lead
6. Pickup Coil Lead
7. Alternator Lead
8. #2,#3 Ignition Coil
9. Chassis Ground Lead
10. Water Temperature Switch Lead
11. Headlight Lead
12. Meter Lead
13. Fuel Level Sensor Drain hose
14. Fuel Tank Drain Hose
15. Run the Hose Inside the Pin.
16. Fuel Tank
17. Baffle Plate
18. Ground Lead
19. Bracket
20. Front Right Turn Signal Light Lead
21. Front Left Turn signal Light lead
22. Horn Lead (Do not slack the lead, and do not contact it and the exhaust pipe.)
23. Right Horn Lead (The lead has a white mark.)
24. Radiator Fan Motor Lead
25. Fuel Level Sensor Lead (Run the lead under the frame.)
26. Battery Negative (−) Lead (Run the lead in the hole of the rear fender right side.)
27. Battery Positive (+) Lead (Run the lead in the hole of the rear fender right side.)
28. Do not appear the leads out of the side cover lower end.
29. Rear Brake Light Switch Lead
30. Battery Positive (+) Lead, Starter Motor Lead (Run the leads under the main harness.)
31. Band (Main Harness, Starter Motor Lead)
32. Right Handlebar Switch Lead)
33. Clamp (Fuel Level Sensor Lead and Drain Hose)
34. Clamp (Install the clamp with the engine mounting bolt.)
35. Clamp
36. Band
37. Clamp (Fuel Level Sensor Lead)
38. Speedometer Cable
39. Brake Hose
40. Band (Brake Hose, Right Handlebar Switch Lead)
41. Band (Radiator Fan Motor Lead)
42. Horn Leads (Run the leads front side the bracket.)
43. Horn Mounting Bracket
44. City Light Lead

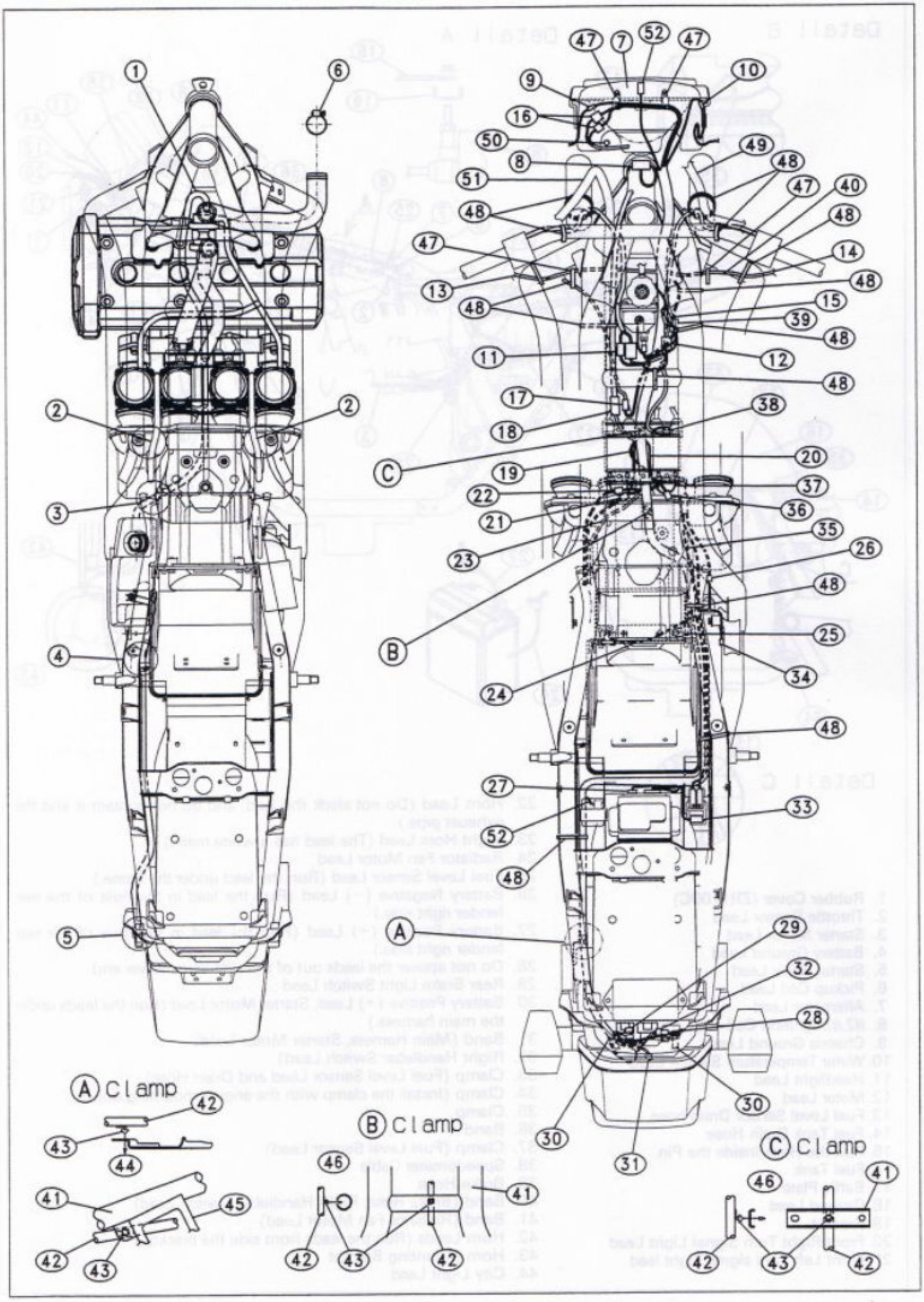
A Clamp
B Clamp
C Clamp

1. Run the reserve tank hose left side the thermostat.
2. Carburetor Air Vent Hose (Run the vent hose in the groove of the air cleaner, and between the air cleaner and frame.
3. Coolant Reserve Tank Hose (Run the hose rear side the boss of the air cleaner side cover.
4. Reserve Tank Overflow Hose (Do not pinch the hose by the seat lock cable.
5. Insert the overflow hose into the hole of the rear fender.
6. Tighten the clamp screw at the under side.
7. Rubber Cover (ZR1100C)
8. Headlight Lead
9. Front Left Turn Signal Light Lead
10. Front Right Turn Signal Light Lead
11. Left Handlebar Switch Lead
12. Right Handlebar Switch Lead
13. Left Horn Lead (Run the lead under the choke cable.)
14. Right Horn Lead (The lead has a white mark. Run the lead under the throttle cable.)
15. Water Temperature Switch
16. Meter Lead
17. Radiator Fan Switch Lead
18. Ignition Switch Lead
19. #1,#4 Ignition Coil
20. #2,#3 Ignition Coil
21. Pickup Coil Lead
22. Alternator Lead
23. Side Stand Switch/Neutral Switch / Oil Pressure Switch Leads
24. Battery Positive (+) Lead
25. Battery Negative (−) Lead
26. Battery Ground Lead
27. Junction Box
28. Rear Left Turn Signal Light Lead
29. Rear Right Turn Signal Light Lead
30. Clamp (Tighten the clamp with the tail light.)
31. Tail / Brake Light Lead
32. Turn Signal Relay
33. Starter Relay
34. Rear Brake Light Switch Lead
35. Starter Motor Lead
36. Fuel Level Sensor Lead
37. Throttle Sensor Lead
38. Chassis Ground Lead (Tighten the ground lead with the ignition coil.)
39. Radiator Fan Motor Lead
40. White Mark (Right Side)
41. Frame
42. Harness
43. Position Clamp
44. Install the clamp from inside of the frame.
45. Helmet Hook Mounting Bracket
46. Install the clamp from lower side of the frame.
47. Clamp
48. Band
49. Brake Hose
50. Speedoemeter Cable
51. Clutch Hose
52. City Light Lead

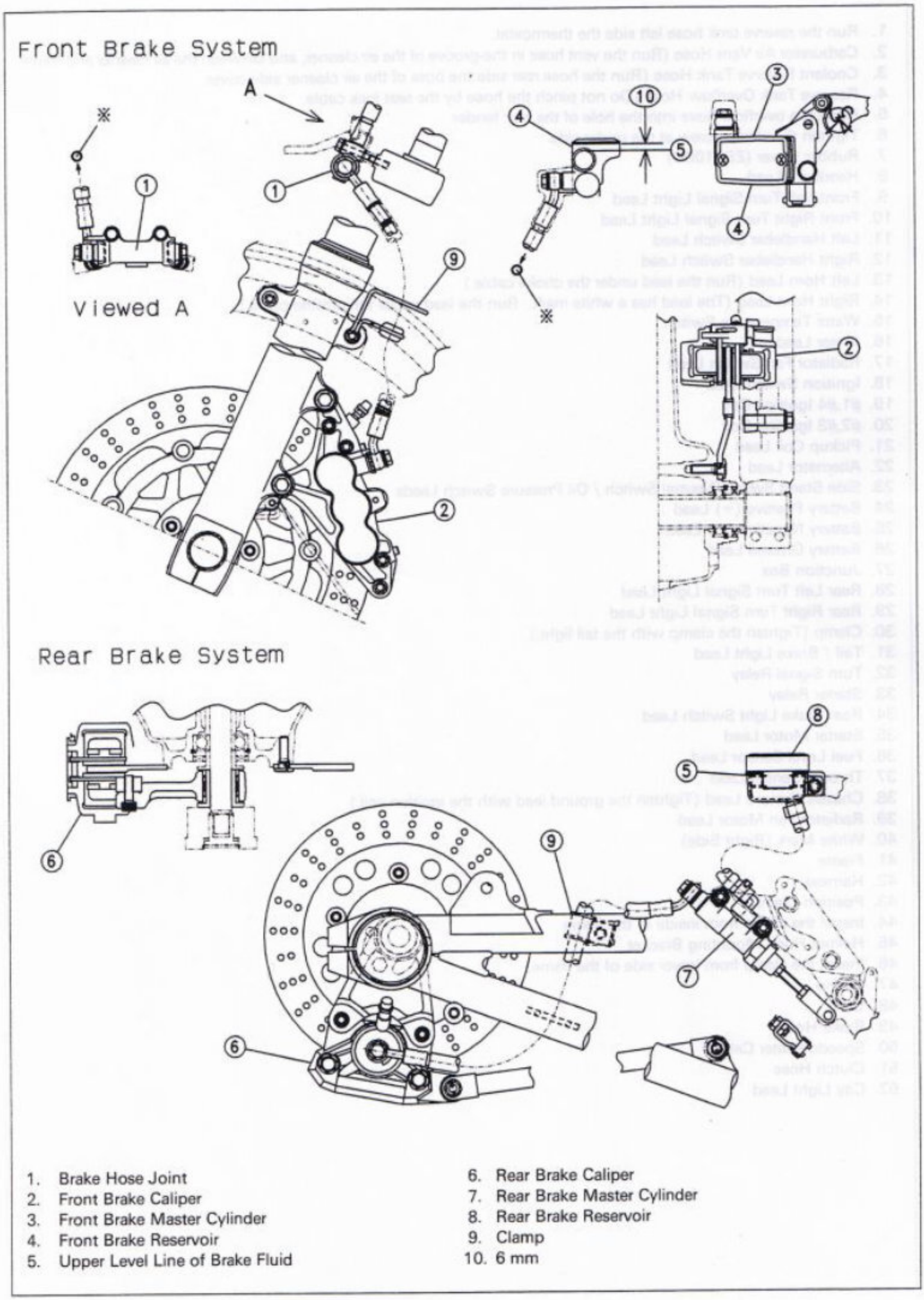

1. Brake Hose Joint
2. Front Brake Caliper
3. Front Brake Master Cylinder
4. Front Brake Reservoir
5. Upper Level Line of Brake Fluid
6. Rear Brake Caliper
7. Rear Brake Master Cylinder
8. Rear Brake Reservoir
9. Clamp
10. 6 mm

Fuel System

Table of Contents

Exploded View 2-2
Specifications 2-4
Throttle Grip and Cables 2-5
- Free Play Inspection 2-5
- Free Play Adjustment 2-5
- Throttle Cable Installation 2-5
- Throttle Cable Lubrication and Inspection 2-5

Choke Lever and Cable 2-6
- Free Play Inspection 2-6
- Free Play Adjustment 2-6
- Choke Cable Installation 2-6
- Choke Cable Lubrication and Inspection 2-6

Carburetors 2-7
- Idle Speed Inspection 2-7
- Idle Speed Adjustment 2-7
- Synchronization Inspection 2-7
- Synchronization Adjustment 2-8
- Service Fuel Level Inspection 2-8
- Service Fuel Level Adjustment 2-9
- Fuel System Cleanliness Inspection 2-9
- Carburetor Removal 2-10
- Carburetor Installation 2-11
- Carburetor Disassembly 2-11
- Carburetor Assembly 2-12
- Carburetor Separation 2-13
- Carburetor Joining 2-13
- Carburetor Cleaning 2-14
- Carburetor Inspection 2-14
- Coolant Filter Cleaning 2-15
- Coolant Valve Inspection 2-16

Air Cleaner 2-17
- Element Removal 2-17
- Element Installation 2-17
- Element Cleaning and Inspection 2-17
- Air Cleaner Draining 2-18
- Air Cleaner Housing Removal 2-18
- Air Cleaner Housing Installation 2-19

Fuel Tank 2-20
- Fuel Tank Removal 2-20
- Fuel Tank Installation 2-20
- Fuel Tank Inspection 2-20
- Fuel Tank Cleaning 2-21
- Fuel Tap Removal 2-21
- Fuel Tap Installation 2-21
- Fuel Tap Inspection 2-21

Exploded View

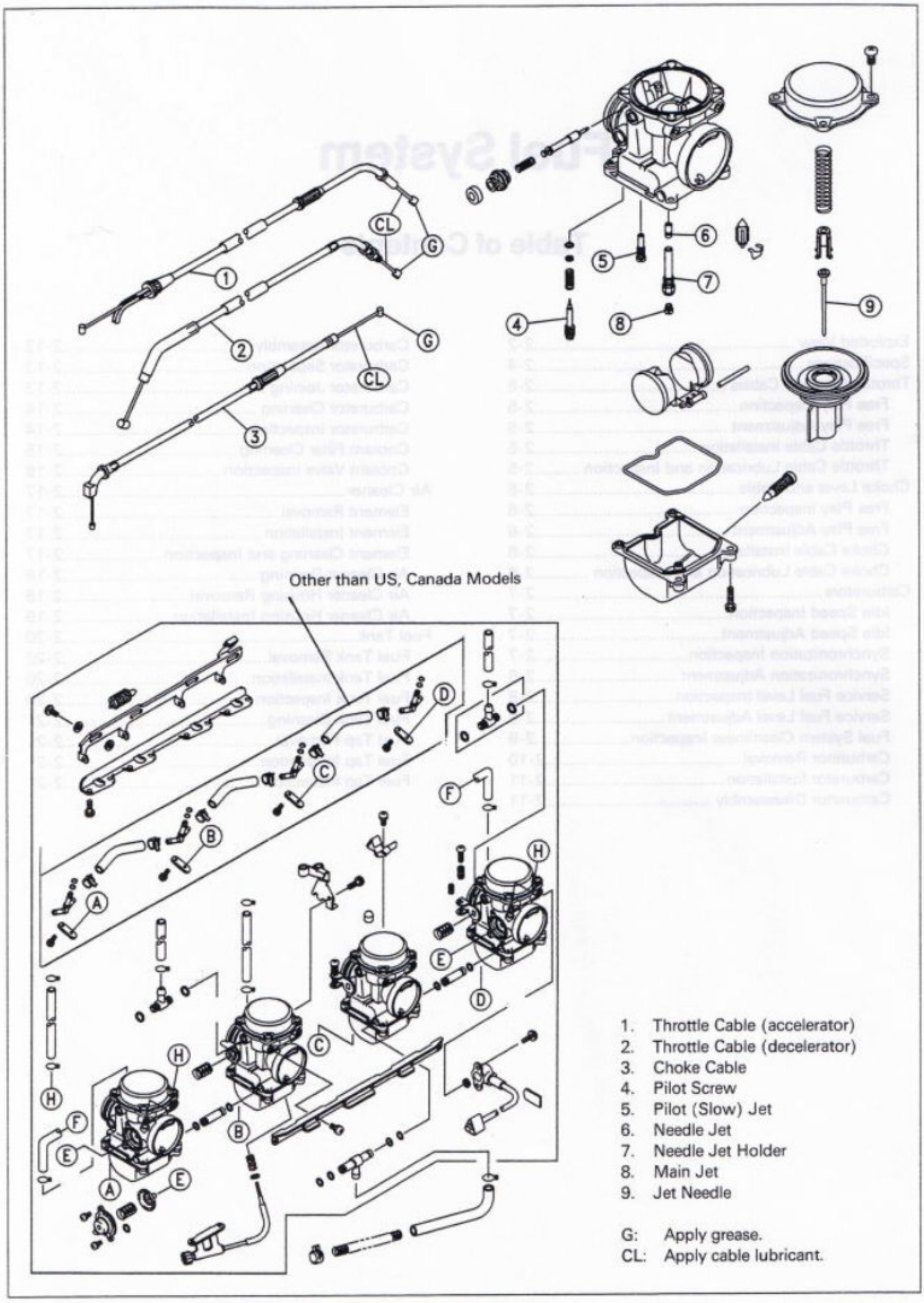

1. Throttle Cable (accelerator)
2. Throttle Cable (decelerator)
3. Choke Cable
4. Pilot Screw
5. Pilot (Slow) Jet
6. Needle Jet
7. Needle Jet Holder
8. Main Jet
9. Jet Needle

G: Apply grease.
CL: Apply cable lubricant.

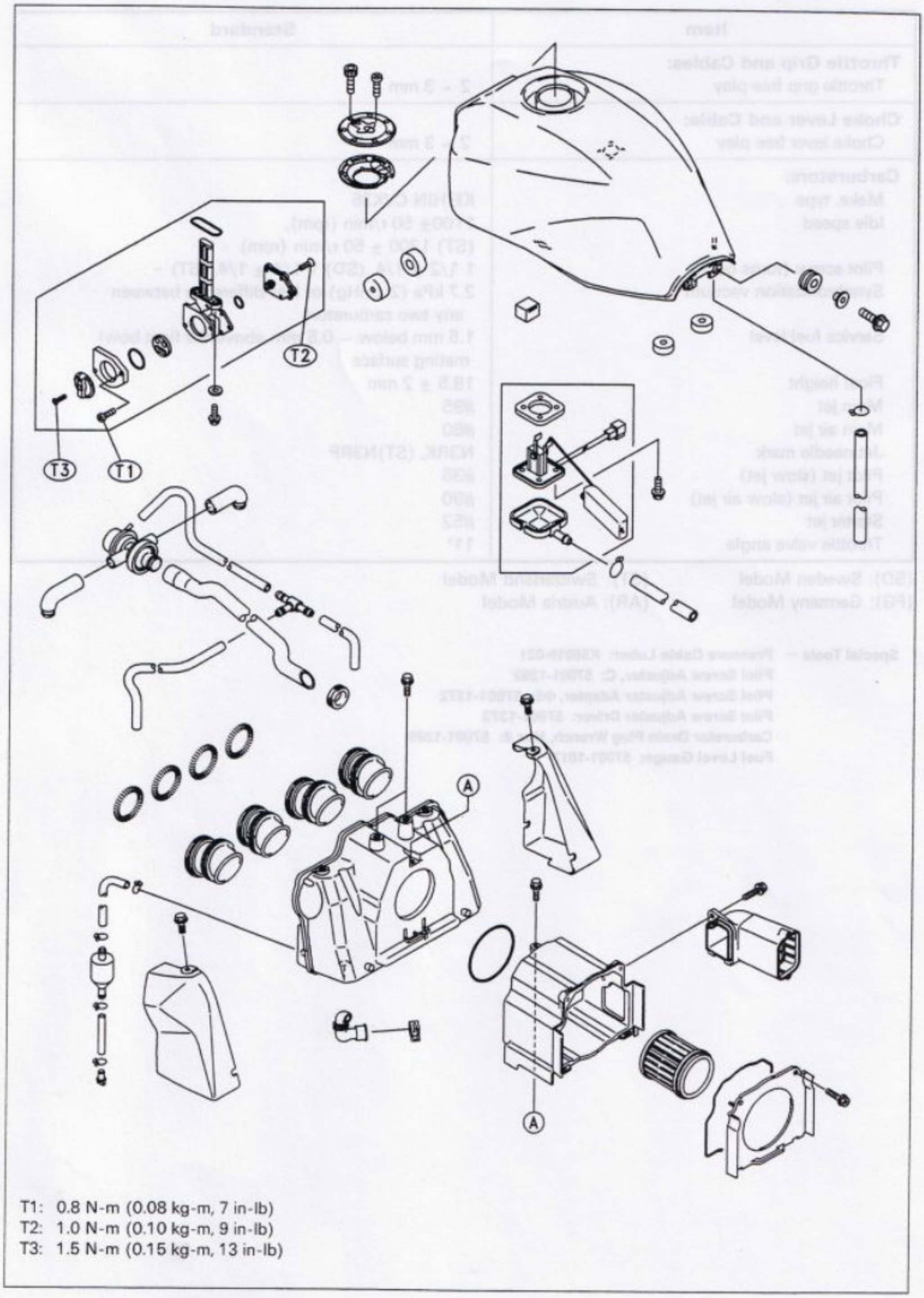

T1: 0.8 N-m (0.08 kg-m, 7 in-lb)
T2: 1.0 N-m (0.10 kg-m, 9 in-lb)
T3: 1.5 N-m (0.15 kg-m, 13 in-lb)

Specifications

Item	Standard
Throttle Grip and Cables:	
Throttle grip free play	2 ~ 3 mm
Choke Lever and Cable:	
Choke lever free play	2 ~ 3 mm
Carburetors:	
Make, type	KEIHIN CVK36
Idle speed	1100± 50 r/min (rpm), (ST) 1300 ± 50 r/min (rpm)
Pilot screw (turns out)	1 1/2 ± 1/4, (SD) 1 1/4 ± 1/4, (ST) –
Synchronization vacuum	2.7 kPa (2 cmHg) or less difference between any two carburetors
Service fuel level	1.5 mm below ~ 0.5 mm above the float bowl mating surface
Float height	18.5 ± 2 mm
Main jet	#95
Main air jet	#80
Jet needle mark	N3RK, (ST)N3RP
Pilot jet (slow jet)	#35
Pilot air jet (slow air jet)	#90
Starter jet	#52
Throttle valve angle	11°

(SD): Sweden Model (ST): Switzerland Model
(FG): Germany Model (AR): Austria Model

Special Tools – Pressure Cable Luber: K56019-021
Pilot Screw Adjuster, C: 57001-1292
Pilot Screw Adjuster Adapter, Φ5: 57001-1372
Pilot Screw Adjuster Driver: 57001-1373
Carburetor Drain Plug Wrench, Hex 3: 57001-1269
Fuel Level Gauge: 57001-1017

Throttle Grip and Cables

Free Play Inspection

- Check the throttle grip free play [A].

★If the free play is incorrect, adjust the throttle cable.

Throttle Grip Free Play
Standard: 2 ~ 3 mm

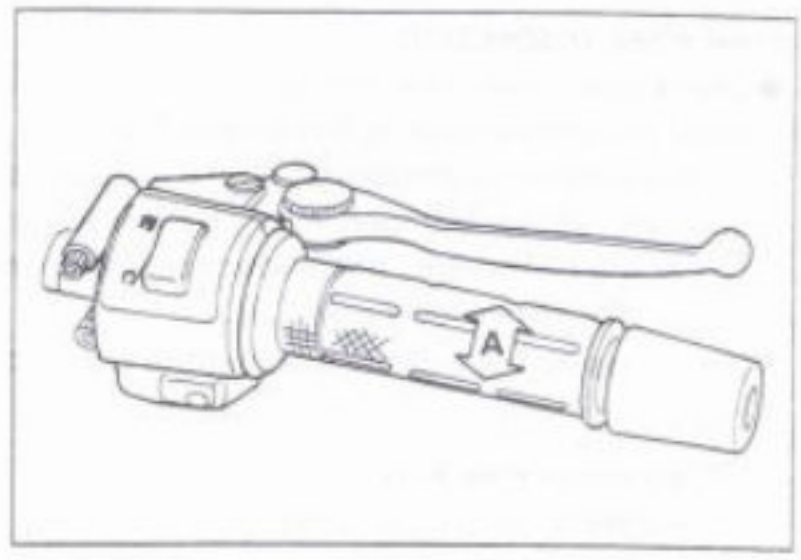

Free Play Adjustment

- Loosen the locknut [A].
- Turn the adjuster [B] until the proper amount of free play can be obtained.
- Tighten the locknut against the adjuster securely.

★If the throttle grip free play cannot be adjusted with the adjuster, use the adjusters middle of the throttle cables.

- Loosen the locknut, and screw the adjuster at the upper end of the accelerator cable all the way in.
- Tighten the locknut against the adjuster securely.

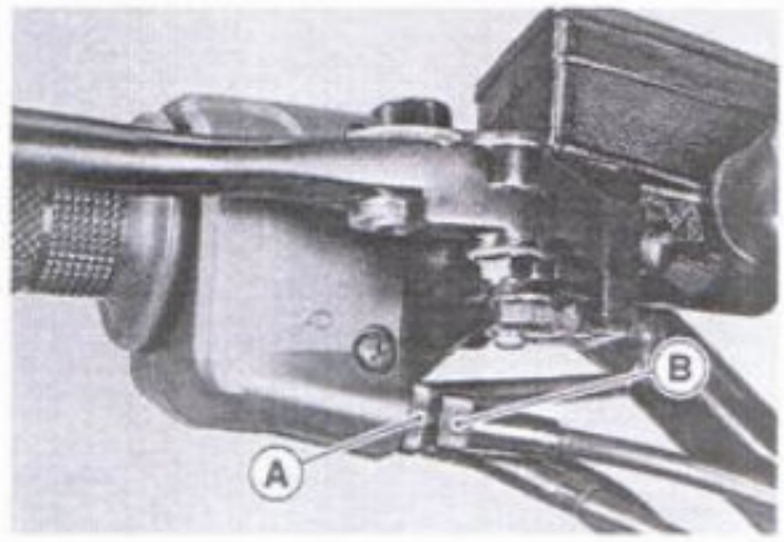

- Remove the fuel tank (see Fuel Tank Removal).
- Loosen the locknuts [A], and turn the adjusters [B] until the proper amount of throttle grip free play is obtained.
- Tighten the locknuts securely.

★If the throttle grip free play cannot be adjusted with the lower adjusters, use the adjuster at the upper end of the cable again.

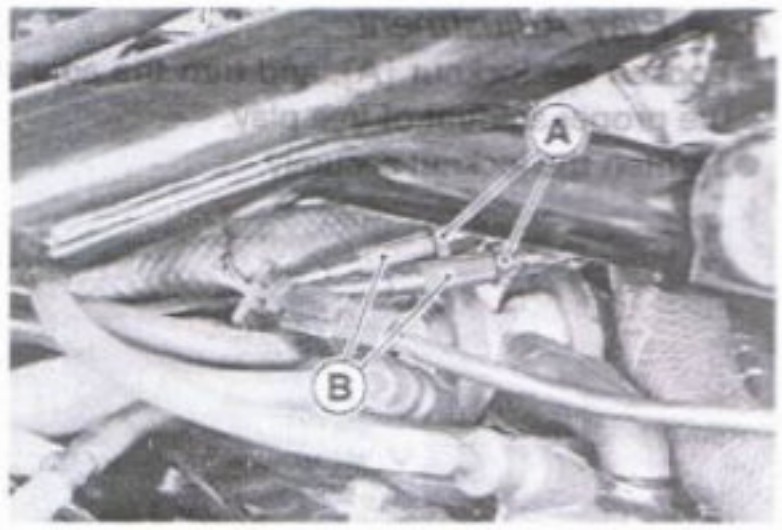

Throttle Cable Installation

- Install the throttle cables in accordance with the Cable, Wire, and Hose Routing section in the General Information chapter.
- Install the lower ends of the throttle cables in the cable bracket on the carburetors after installing the upper ends of the throttle cable in the grip.
- After installation, adjust each cable properly.

⚠WARNING

Operation with incorrectly routed or improperly adjusted cables could result in an unsafe riding condition.

Throttle Cable Lubrication and Inspection

Whenever the throttle cables are removed, lubricate the throttle cables as follows:

- Apply a thin coating of grease to the cable lower ends.
- Lubricate the cable with a penetrating rust inhibitor.

Special Tool – Pressure Cable Luber: K56019-021 [A]

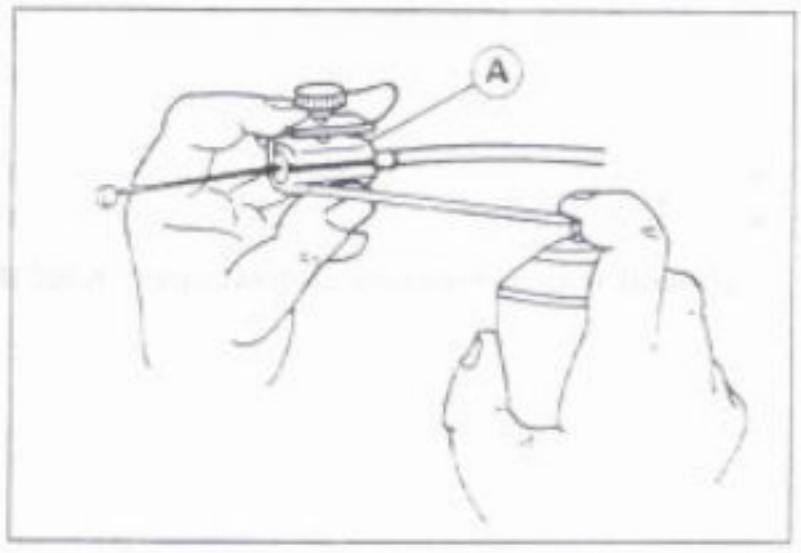

Choke Lever and Cable

Free Play Inspection

- ●Check the choke lever free play.
- ○Push the choke lever all the way to the front.
- ○To determine the amount of choke lever play, pull the choke lever [A] until the starter plunger lever [B] contacts with the starter plunger [C] at the carburetor ; the amount of choke lever lower end travel is the amount of choke lever play [D].
- ★If the free play is incorrect, adjust the choke cable.

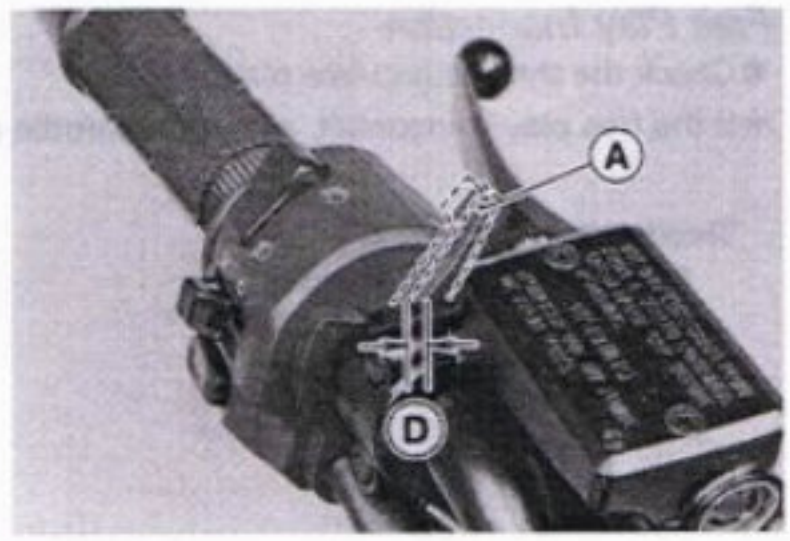

Choke Lever Free Play
Standard: 2 ~ 3 mm

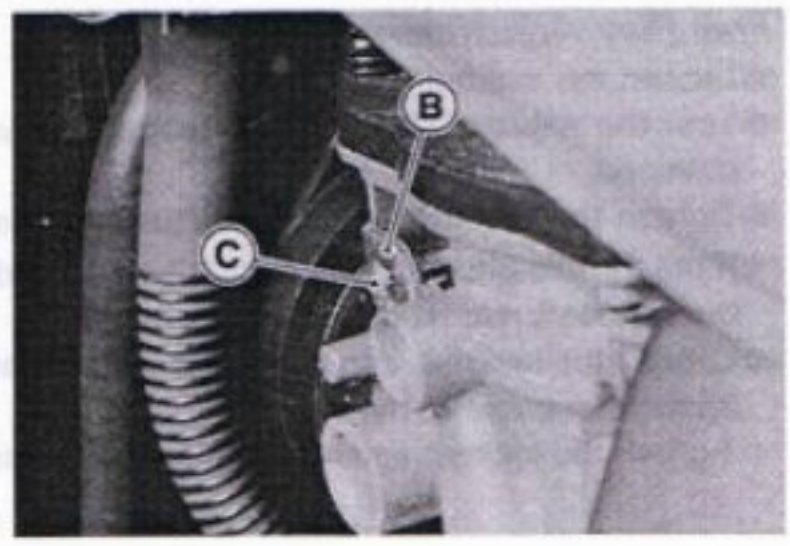

Free Play Adjustment

- ●Loosen the locknut [A], and turn the adjuster [B] until the cable has the proper amount of free play.
- ●Tighten the locknut securely.

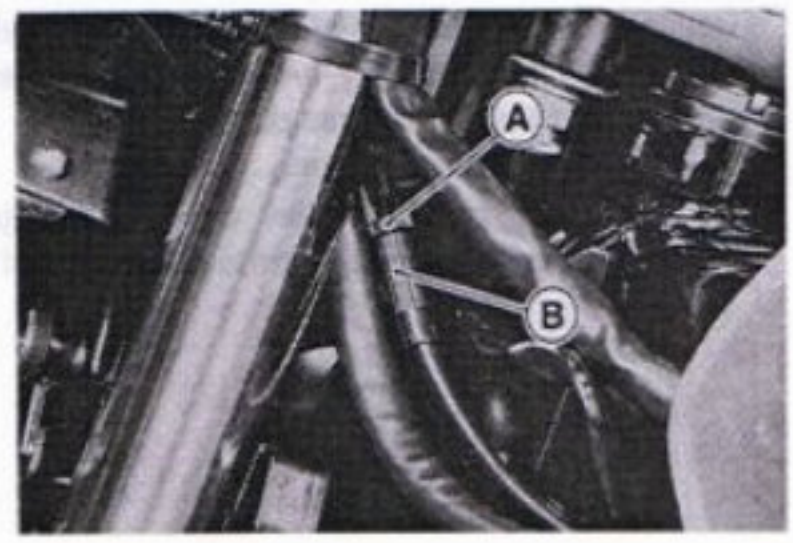

Choke Cable Installation

- ●Install the choke cable in accordance with the Cable, Wire, and Hose Routing section in the General Information chapter.
- ●After installation, adjust the cable properly.

⚠WARNING

Operation with an incorrectly routed or improperly adjusted cable could result in an unsafe riding condition.

Choke Cable Lubrication and Inspection

Whenever the choke cable is removed, lubricate the choke cable as follows:

- ●Apply a thin coating of grease to the cable upper end.
- ●Lubricate the cable with a penetrating rust inhibitor.

Special Tool – Pressure Cable Luber: K56019-021 [A]

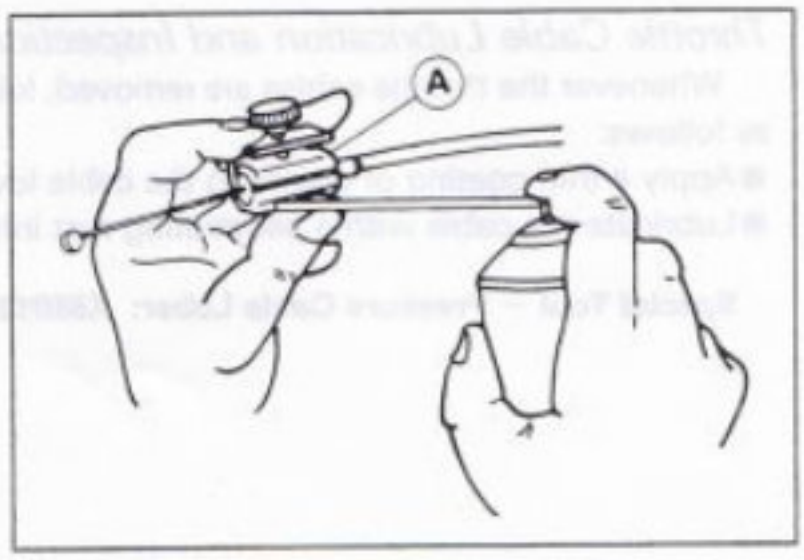

Carburetors

Idle Speed Inspection

- Start the engine and warm it up thoroughly.
- With the engine idling, turn the handlebar to both sides.

★If handlebar movement changes the idle speed, the throttle cables may be improperly adjusted or incorrectly routed, or damaged. Be sure to correct any of these conditions before riding (see Cable, Wire, and Hose Routing section in the General Information chapter).

⚠WARNING

Operation with improperly adjusted, incorrectly routed, or damaged cables could result in an unsafe riding condition.

- Check idle speed.

★If the idle speed is out of the specified range, adjust it.

Idle Speed

Standard: 1100 ± 50 r/min (rpm),
(Switzerland) 1300 ± 50 r/min (rpm)

Idle Speed Adjustment

- Start the engine and warm it up thoroughly.
- Turn the adjusting screw [A] until the idle speed is correct.

○Open and close the throttle a few times to make sure that the idle speed is within the specified range. Readjust if necessary.

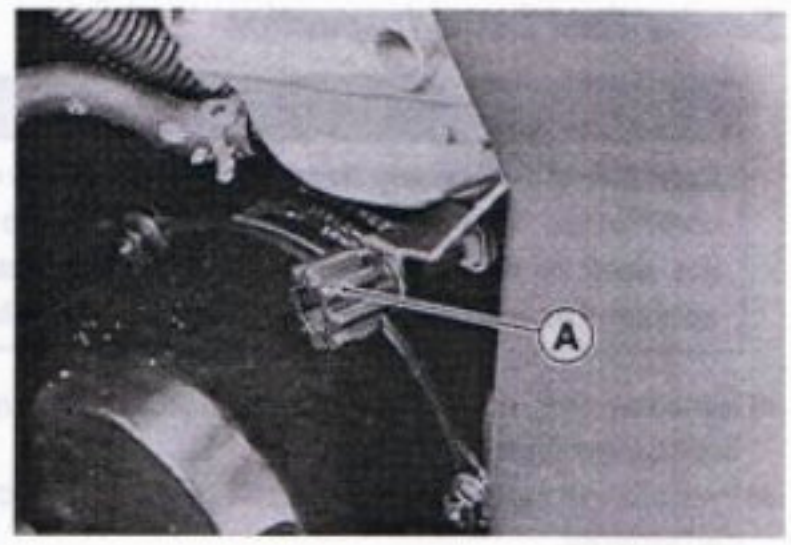

Synchronization Inspection

- Remove the fuel tank (see Fuel Tank Removal).
- Supply fuel to the carburetors with an auxiliary fuel tank.
- Start the engine and warm it up thoroughly.
- Check idle speed.
- Pull the vacuum hoses off, and attach a suitable vacuum gauge [A] to the fittings on the carburetors.
- Start the engine and let it idle to measure the carburetor intake vacuum.

★If the vacuum is incorrect, adjust the synchronization.

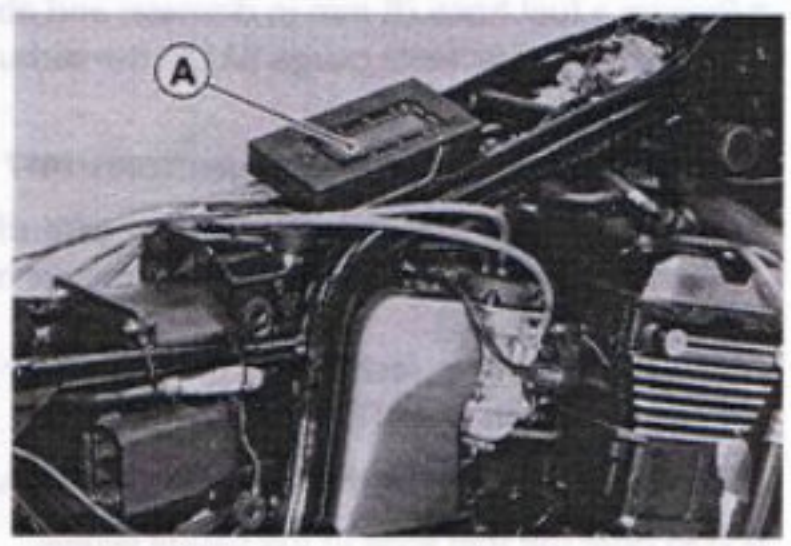

Carburetor Synchronization Vacuum

Standard: 2.7 kPa (2 cmHg) or less difference between any two carburetors.

Synchronization Adjustment

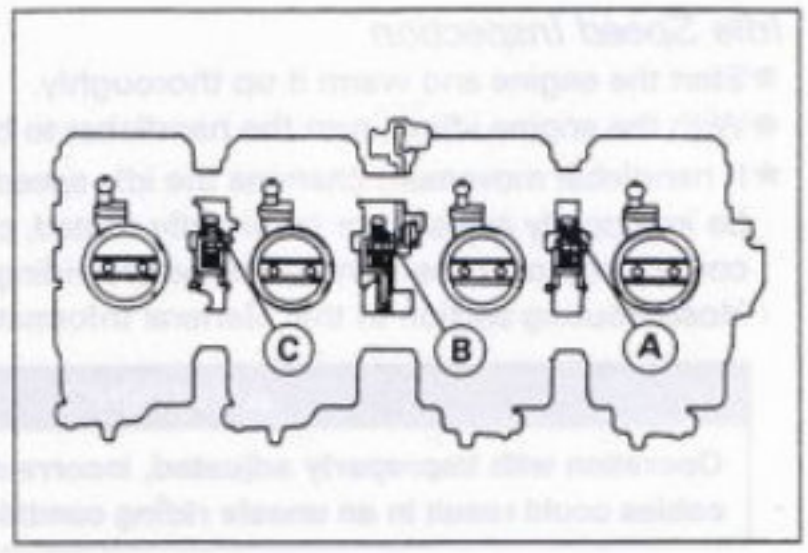

- Turn the adjusting screw to synchronize the carburetors.

○ First synchronize the left two and then the right two carburetors by means of the left and right adjusting screws [A, C]. Then synchronize the left two carburetors and the right two carburetors using the center adjusting screw [B].

★ If the carburetor synchronization cannot be obtained by using the adjusting screws, check for dirt or blockage, and then check the pilot screw settings.

Special Tools – Pilot Screw Adjuster, C: 57001-1292
Pilot Screw Adjuster Adapter, Φ5: 57001-1372
Pilot Screw Adjuster Driver: 57001-1373

- Check the carburetor synchronization again.

NOTE

○ *Do not turn the pilot screws carelessly during carburetor synchronization. You may cause poor running at low engine speed.*

- Check idle speed.

Service Fuel Level Inspection

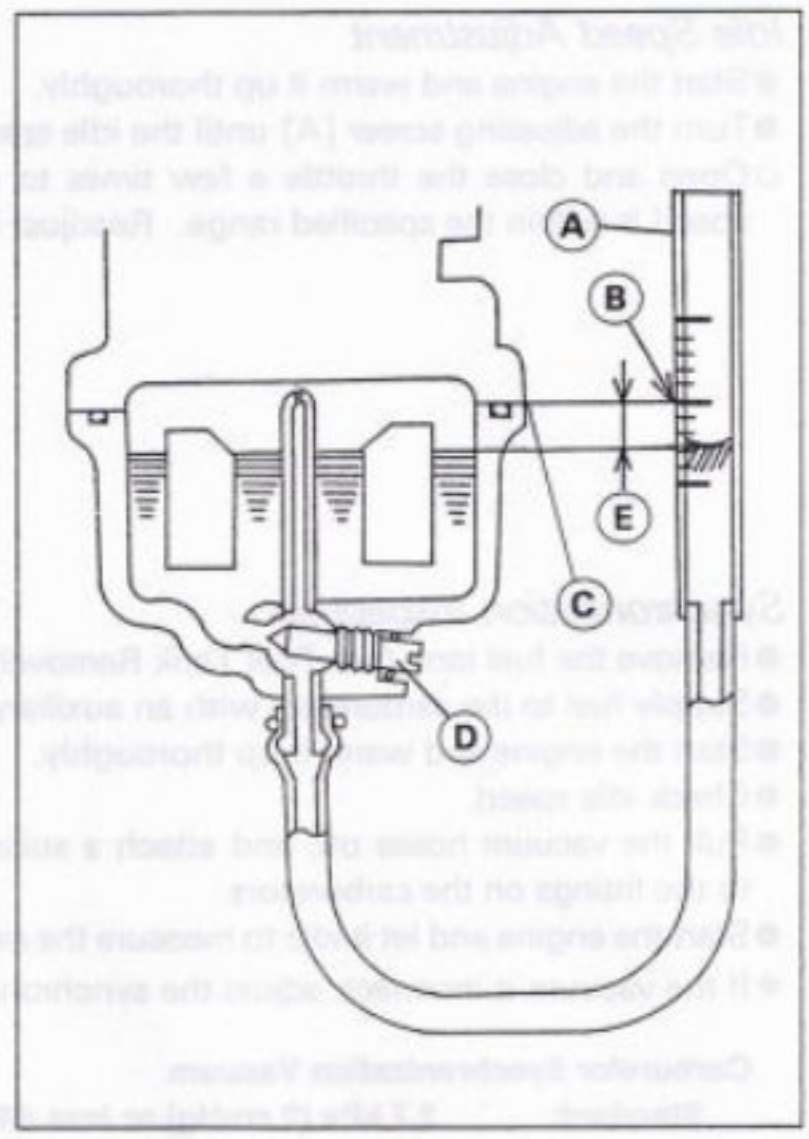

⚠WARNING

Gasoline is extremely flammable and can be explosive under certain conditions. Turn the ignition switch OFF. Do not smoke. Make sure the area is well-ventilated and free from any source of flame or sparks; this includes any appliance with a pilot light.

- Remove the carburetors, and hold them upright on a stand (see Carburetor Removal).
- Prepare an auxiliary fuel tank and connect the fuel hose to the carburetors.
- Prepare a fuel hose (6 mm in diameter and about 300 mm long).
- Connect the fuel level gauge [A] to the carburetor float bowl with the fuel hose.

Special Tool – Fuel Level Gauge: 57001-1017

- Hold the gauge vertically against the side of the carburetor body so that the middle line [B] is several millimeters higher than the float bowl mating surface [C].
- Turn the fuel tap to feed fuel to the carburetor and gauge, then turn the carburetor drain plug [D] out a few turns.

Special Tool – Carburetor Drain Plug Wrench, Hex 3: 57001-1269

- Wait until the fuel level in the gauge settles.

NOTE

○ *Do not lower the middle line below the float bowl mating surface. If the gauge is lowered and then raised again, the fuel level measured shows somewhat higher than the actual fuel level. If the gauge is lowered too far, dump the fuel out of it into a suitable container and start the procedure over again.*

- Read the fuel level [E] in the gauge and compare to the specification.

●Tighten the drain plug and remove the fuel level gauge.
★If the fuel level is incorrect, adjust it (see Service Fuel Level Adjustment).

Service Fuel Level
Standard: 1.5 mm below ~ 0.5 mm above the float bowl mating surface

●Repeat the same procedure for the other carburetors.

Service Fuel Level Adjustment

⚠WARNING

Gasoline is extremely flammable and can be explosive under certain conditions. Turn the ignition switch OFF. Do not smoke. Make sure the area is well-ventilated and free from any source of flame or sparks; this includes any appliance with a pilot light.

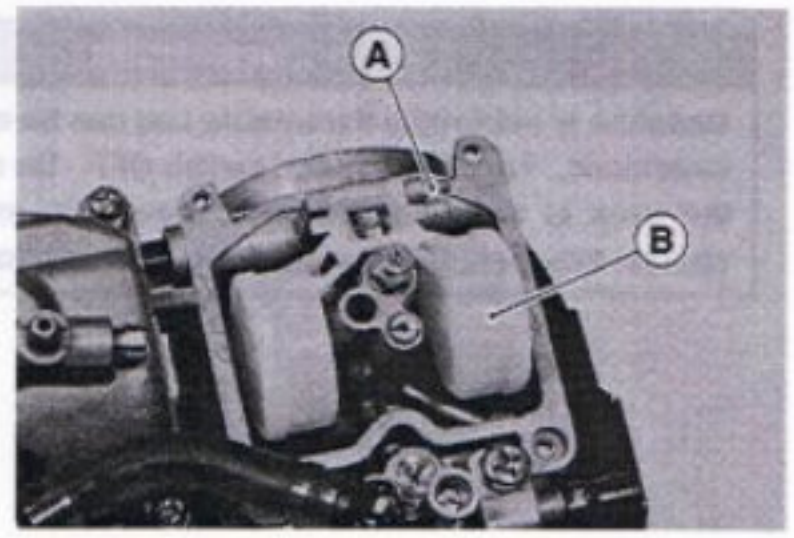

●Remove the carburetors, and drain the fuel into a suitable container.
●Remove the float bowl by taking out the screws.
●Slide out the pivot pin [A] and remove the float [B].

●Bend the tang [A] on the float arm very slightly to change the float height.
○Increasing the float height lowers the fuel level and decreasing the float height raises the fuel level.

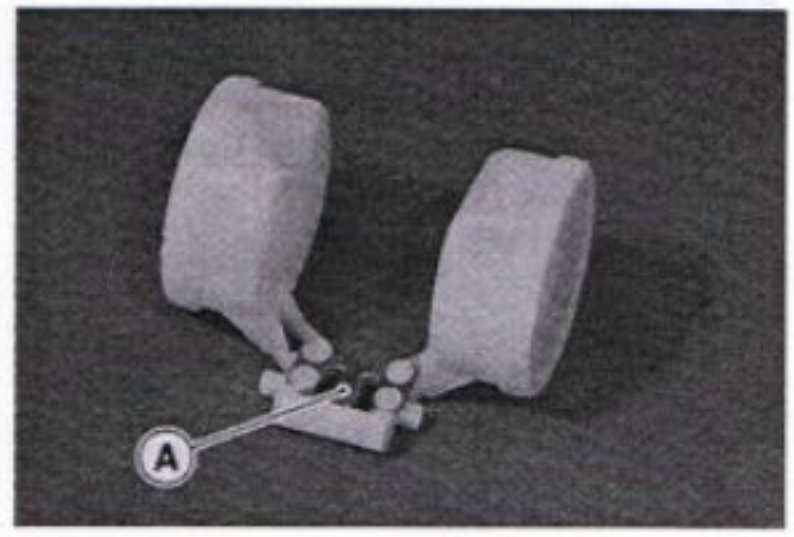

Float Height
Standard: 18.5 ± 2 mm

NOTE

○*Do note push the needle rod [A] in during the float height measurement [B].*

●Assemble the carburetor, and recheck the fuel level.
★If the fuel level cannot be adjusted by this method, the float or the float valve [C] is damaged.

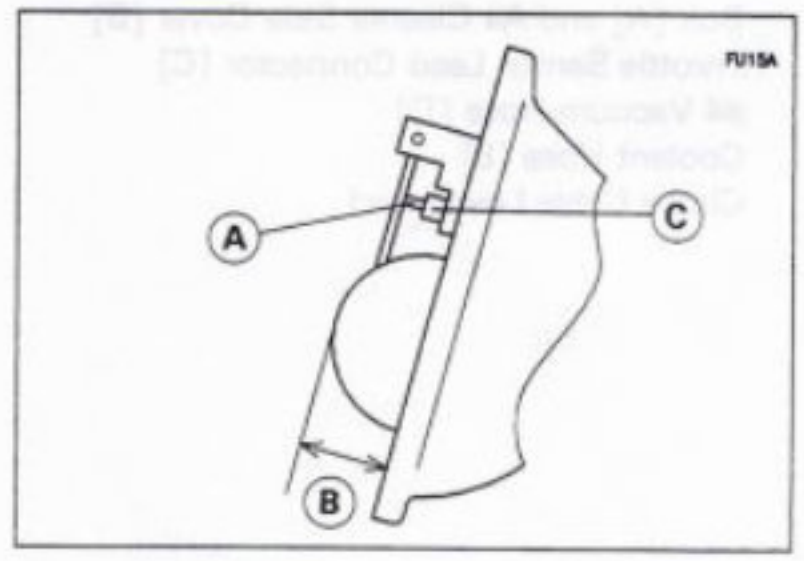

Fuel System Cleanliness Inspection

⚠WARNING

Gasoline is extremely flammable and can be explosive under certain conditions. Turn the ignition switch OFF. Do not smoke. Make sure the area is well-ventilated and free from any source of flame or sparks; this includes any appliance with a pilot light.

- Connect a suitable hose [A] to the fitting at the bottom of each carburetor float bowl.
- Run the lower ends of the hoses into a suitable container.
- Turn the fuel tap to the PRI position.
- Turn out each drain plug [B] a few turns and drain the float bowls.

Special Tool – Carburetor Drain Plug Wrench, Hex 3: 57001-1269

- Check to see if water or dirt comes out.
- Tighten the drain plugs and turn the fuel tap to the ON position.

★If any water or dirt appears during the above inspection, clean the fuel system (see Carburetor Cleaning and Fuel Tank Cleaning).

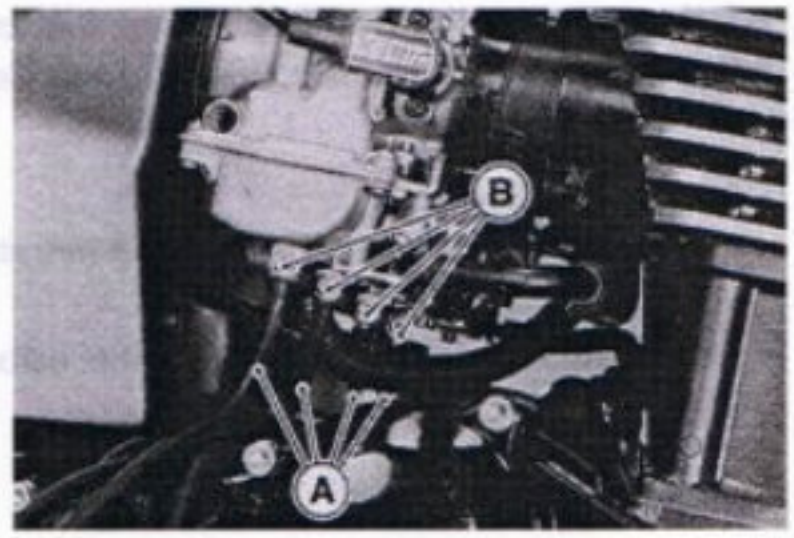

Carburetor Removal

⚠WARNING

Gasoline is extremely flammable and can be explosive under certain conditions. Turn the ignition switch OFF. Do not smoke. Make sure the area is well-ventilated and free from any source of flame or sparks; this includes any appliance with a pilot light.

- Remove:
  Coolant (Drain, see Cooling System chapter)
  Fuel Tank (see Fuel Tank Removal)
  Bolt [A] and Air Cleaner Side Cover [B]
  Coolant Hose [C]
  #1 Vacuum Hose [D]

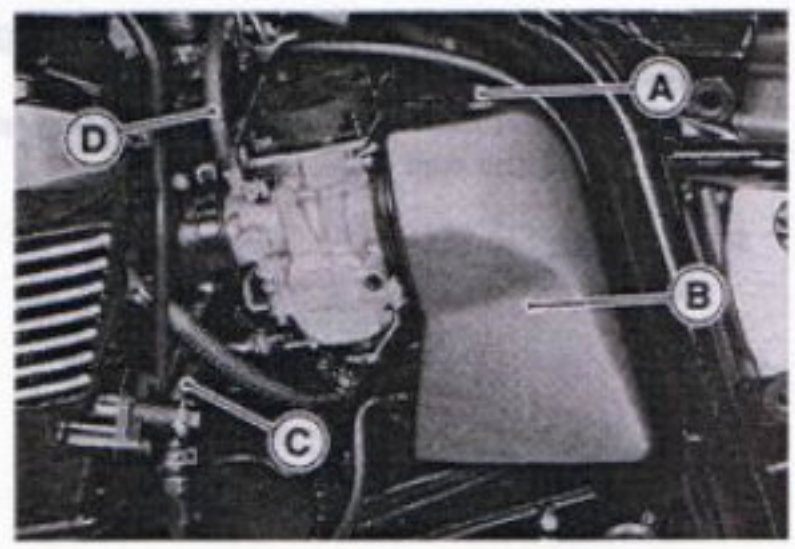

Bolt [A] and Air Cleaner Side Cover [B]
Throttle Sensor Lead Connector [C]
#4 Vacuum Hose [D]
Coolant Hose [E]
Choke Cable Lower End

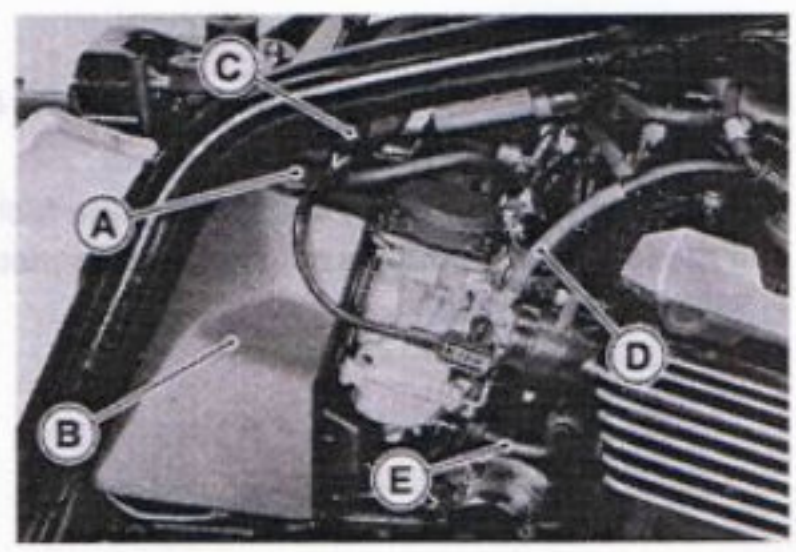

- Loosen the carburetor holder clamps [A].
- Move back the spring bands [B].

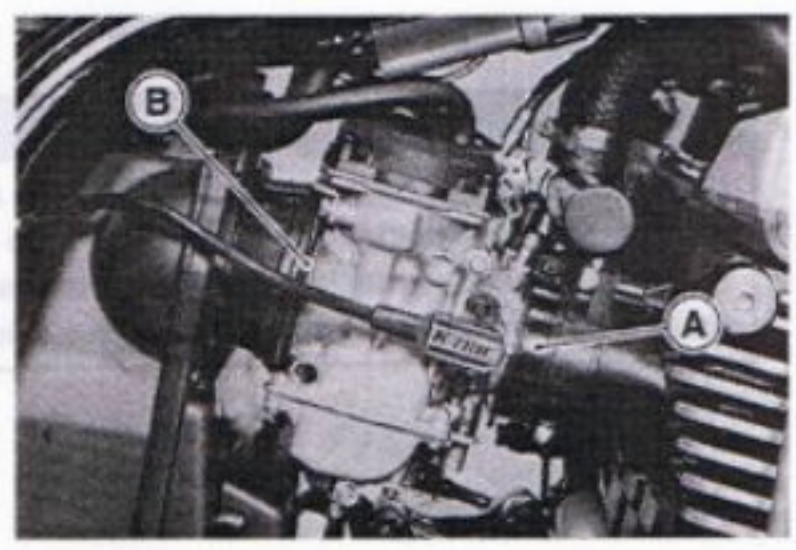

- Pull the carburetor assembly out of the air cleaner duct ends, and then pull it out of the carburetor holders from the vehicle's right side.
- Remove the throttle cables lower ends [A] to complete carburetor assembly removal.
- Stuff pieces of lint-free, clean cloth into the carburetor holders and the intake ducts to keep dirt out of the engine and air cleaner.

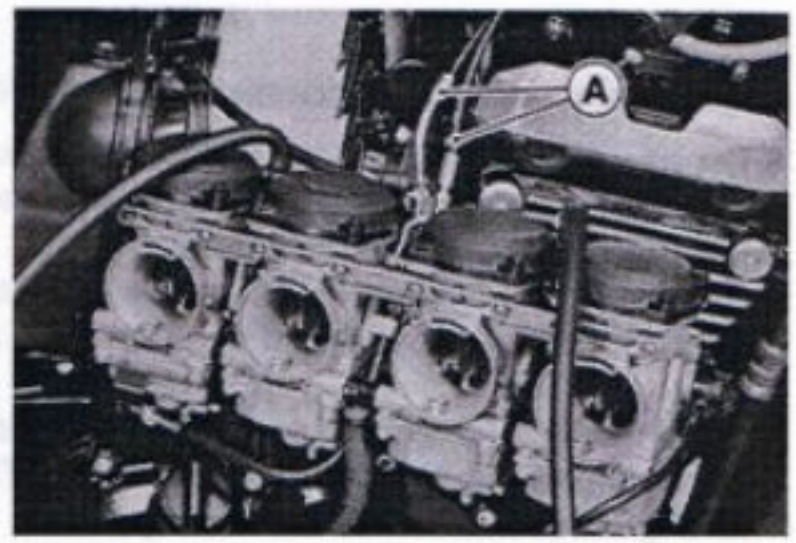

⚠WARNING

If dirt or dust is allowed to pass through into the carburetor, the throttle may become stuck, possibly causing an accident.

CAUTION

If dirt gets through into the engine, excessive engine wear and possibly engine damage will occur.

Carburetor Installation

- Install the holder clamps [A] as shown being careful of the screw position and the screw head [B] direction.
- Run the carburetor vent hose and fuel hose as shown in the Cable, Wire, and Hose Routing section of the General Information chapter.
- Turn the throttle grip and make sure that the throttle linkages do not contact the holder screws or hoses.

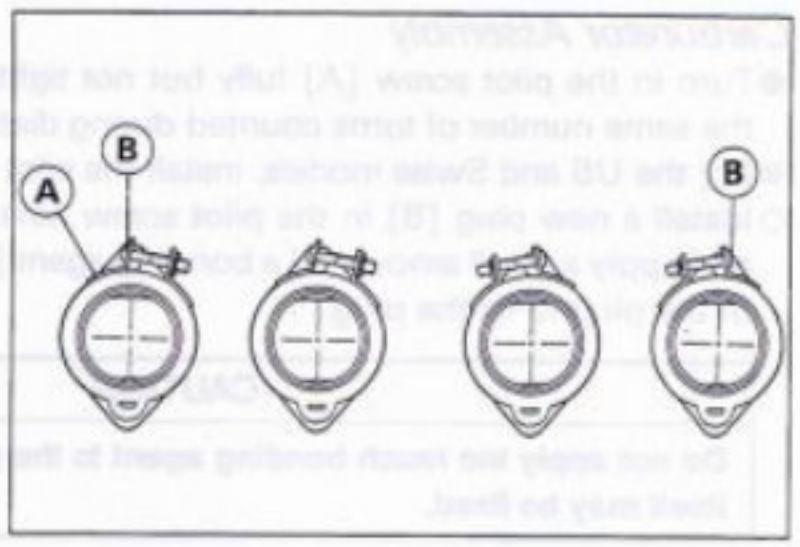

⚠WARNING

Be sure to install the holder clamp screws in the direction shown. Or, the screws could come in contact with the throttle linkage resulting in unsafe riding condition.

- Check fuel leakage from the carburetors.

⚠WARNING

Fuel spilled from the carburetors is hazardous.

- Adjust the following items if necessary.
  Throttle Cables
  Choke Cable
  Idle Speed

Carburetor Disassembly

- Remove the carburetors (see Carburetor Removal).

⚠WARNING

Gasoline is extremely flammable and can be explosive under certain conditions. Turn the ignition switch OFF. Do not smoke. Make sure the area is well-ventilated and free from any source of flame or sparks; this includes any appliance with a pilot light.

NOTE

○ *The carburetor can be disassembled in the joined state.*

- The pilot screws are set at the factory and should not be removed. But if necessary, remove the pilot screw as follows.
- Replace the O-rings with new ones.

○ For the US and Swiss models, remove the pilot screw plug as follows:

○ Punch a hole in the plug and pry it out with an awl or other suitable tool.

- Turn in the pilot screw and count the number of turns until it seats fully but not tightly, and then remove the screw. This is to set the screw to its original position when assembling.

CAUTION

During carburetor disassembly, be careful not to damage the diaphragm. Never use a sharp edge to remove the diaphragm.

- Push the needle jet [A] out from the inside of the carburetor with your finger.

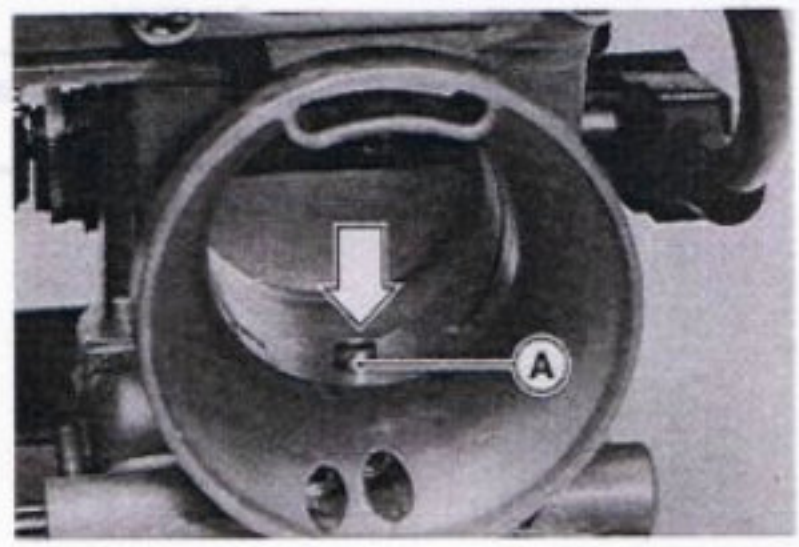

Carburetor Assembly

- Turn in the pilot screw [A] fully but not tightly, and then back it out the same number of turns counted during disassembly.
- For the US and Swiss models, install the pilot screw plug as follows:

○ Install a new plug [B] in the pilot screw hole of the carburetor body, and apply a small amount of a bonding agent [C] to the circumference of the plug to fix the plug.

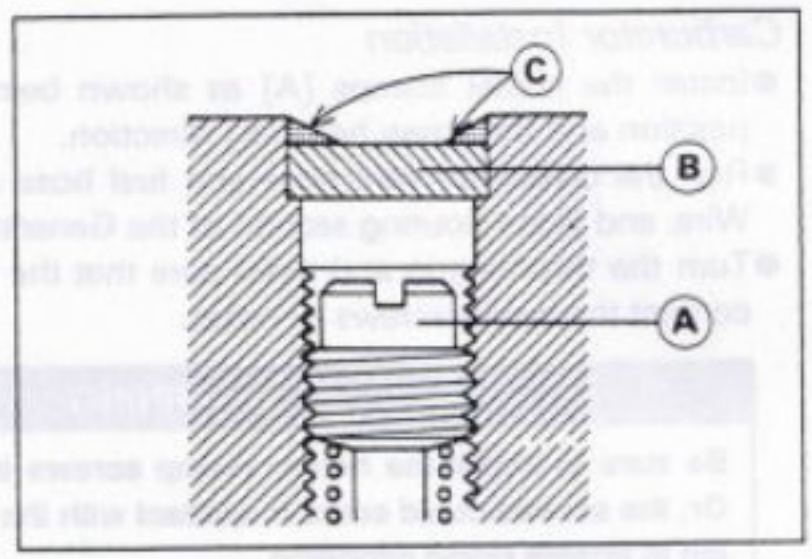

CAUTION

Do not apply too much bonding agent to the plug, or the pilot screw itself may be fixed.

- Turn the carburetor body upside-down, and drop the needle jet [A] into place so that the smaller diameter end [B] of the jet goes in first.
- Carefully screw in the needle jet holder [C]. It will seat against the needle jet, pushing the end of the jet into the carburetor bore.

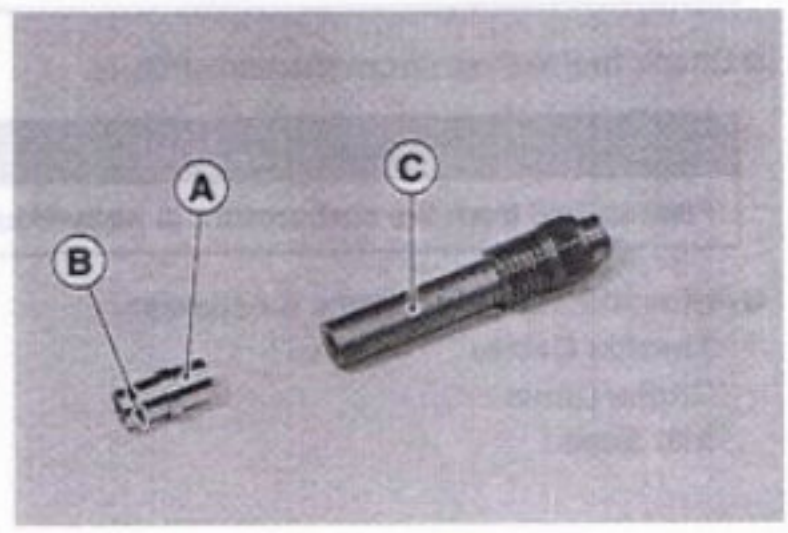

CAUTION

Do not force the needle jet holder [A] and main jet [B] or overtighten them. They could be damaged requiring replacement.

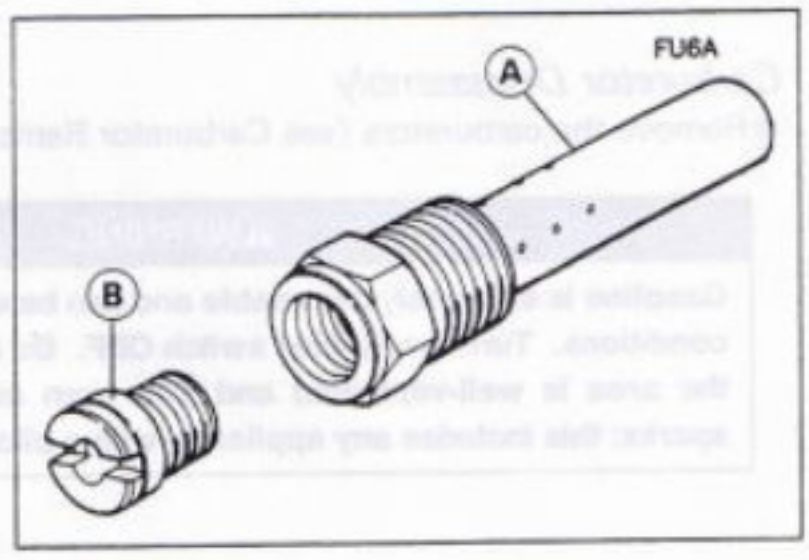

- Slip the jet needle through the hole in the center of the vacuum piston, and put the spring seat [A] on the top of the needle. Turn the seat so that it does not block the hole [B] at the bottom of the vacuum piston.
- After installing the upper chamber cover, check that the vacuum piston slides up and down smoothly without binding in the carburetor bore.

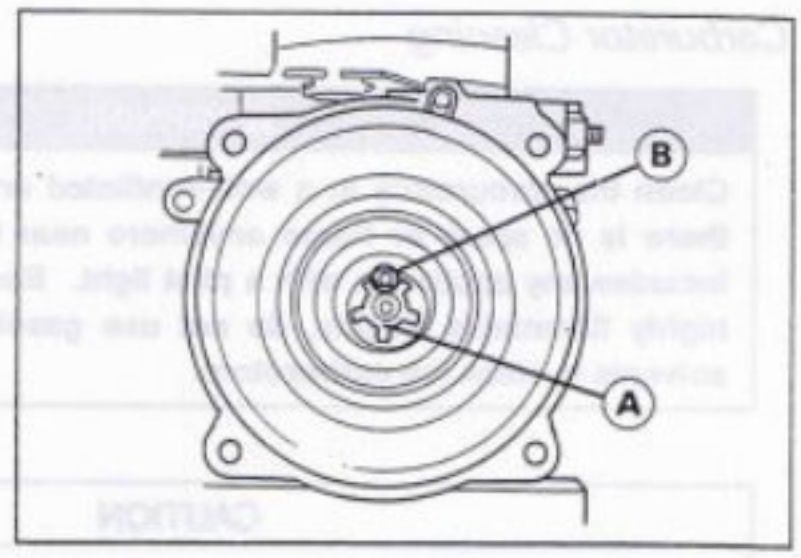

Carburetor Separation

- Remove the carburetors (see Carburetor Removal).
- Read the WARNING in the Carburetor Disassembly/Assembly.
- Mark the carburetor locations so that the carburetors can be installed in their original positions.
- Remove:
  Choke Return Spring [A]
  Starter Plunger Lever [B]
  Bracket [C]
  Coolant Hose [D]

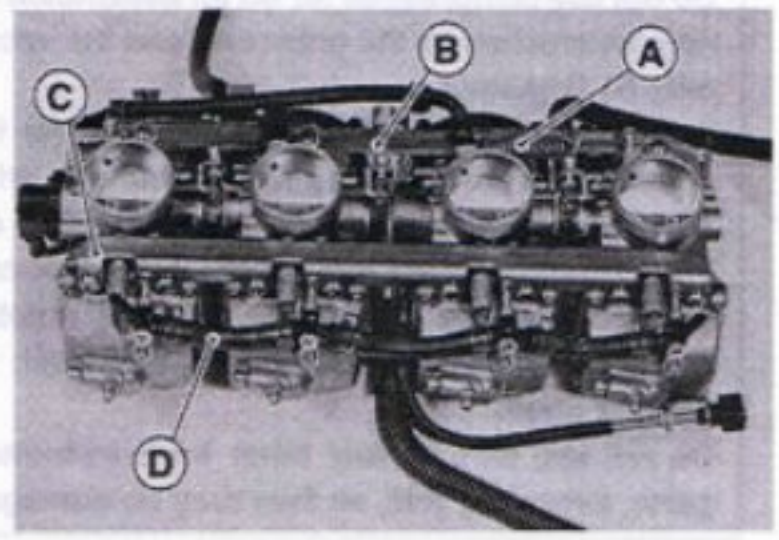

- Remove:
  Idle Adjusting Screw Bracket [A]
  Bracket [B]
- Separate the carburetors.

○ Do not remove the throttle valves.

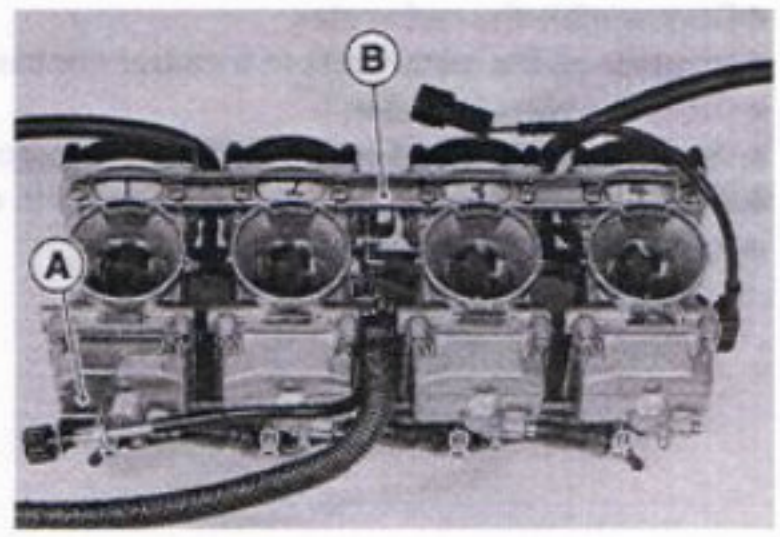

Carburetor Joining

- The center lines of the carburetor bores must be parallel both horizontally and vertically. If they are not, loosen the mounting screws and align the carburetors on a flat surface.
- Retighten the mounting screws.
- After installing the choke mechanism, check to see that the starter plunger lever slides right to left smoothly without abnormal friction.

CAUTION
Fuel mixture trouble could result if the starter plunger does not seat properly in its rest position after the choke lever is returned.

- Visually synchronize the throttle (butterfly) valves.

○ Check to see that all throttle valves open and close smoothly without binding when turning the pulley.

○ Visually check the clearance [A] between the throttle valve and the carburetor bore in each carburetor.

★ If there is a difference between any two carburetors, turn the balance adjusting screw [B] to obtain the same clearance.

- Install the carburetors (see Carburetor Installation).
- Adjust the synchronization (see Synchronization Adjustment).

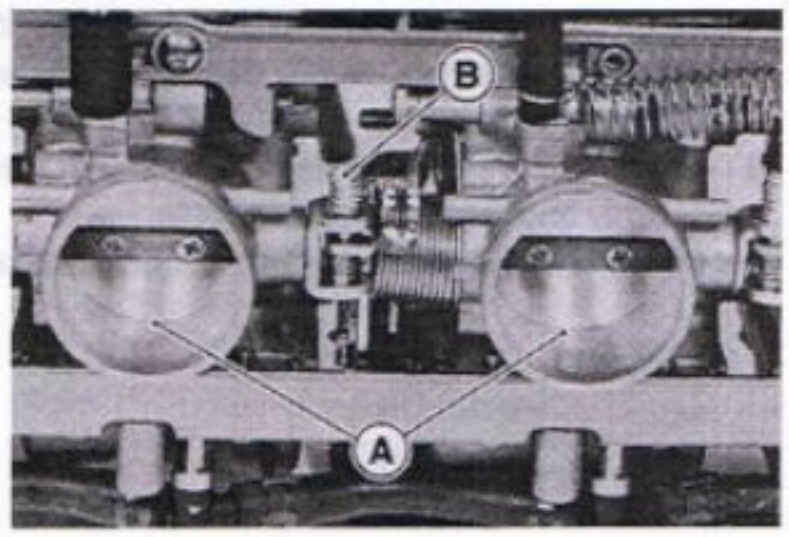

Carburetor Cleaning

⚠WARNING

Clean the carburetors in a well-ventilated area, and take care that there is no spark or flame anywhere near the working area; this includes any appliance with a pilot light. Because of the danger of highly flammable liquids, do not use gasoline or low-flash point solvents to clean the carburetors.

CAUTION

Do not use compressed air on an assembled carburetor, or the floats may be crushed by the pressure, and the vacuum piston diaphragms may be damaged.
Remove as many rubber or plastic parts from the carburetor as possible before cleaning the carburetor with a cleaning solution. This will prevent damage to or deterioration of the parts.
The carburetor body has plastic parts that cannot be removed. Do not use a strong carburetor cleaning solution which could attack these parts; instead, use a mild high-flash point cleaning solution safe for plastic parts.
Do not use wire or any other hard instrument to clean carburetor parts, especially jets, as they may be damaged.

- Disassemble the carburetor.
- Immerse all the metal parts in a carburetor cleaning solution.
- Rinse the parts in water.
- When the parts are cleaned, dry them with compressed air.
- Blow through the air and fuel passages with compressed air.
- Assemble the carburetor.

Carburetor Inspection

⚠WARNING

Gasoline is extremely flammable and can be explosive under certain conditions. Turn the ignition switch OFF. Do not smoke. Make sure the area is well-ventilated and free from any source of flame or sparks; this includes any appliance with a pilot light.

- Remove the carburetors (see this chapter).
- Before disassembling the carburetors, check the fuel level (see Fuel Level Inspection).
- Slide the starter plunger lever right to left to check that the starter plungers move smoothly and return with spring force.

★If the starter plungers do not work properly, replace the plungers, lever and/or the carburetors.

- Turn the throttle cable pulley to check that the throttle valves [A] move smoothly and return by spring force.

★If the throttle valves do not move smoothly, replace the carburetors.

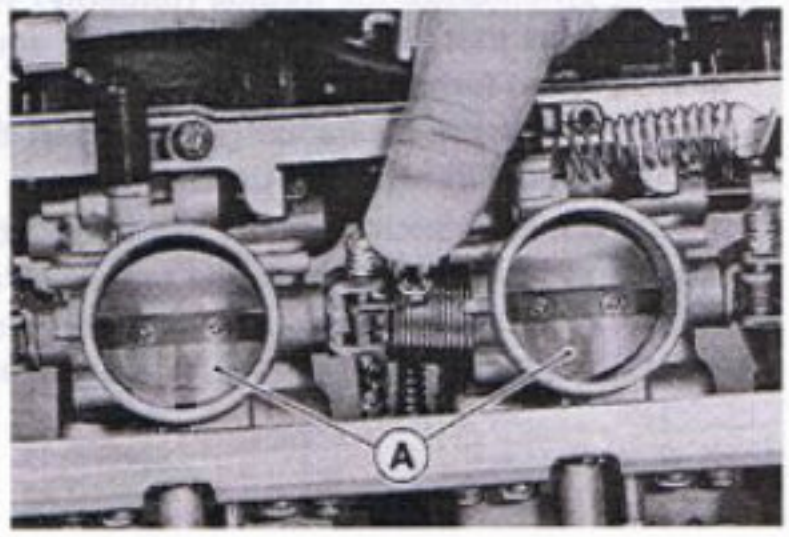

- Disassemble the carburetors.
- Clean the carburetors.
- Check that the diaphragm on the vacuum piston is in good condition.

★If any of the diaphragms are not in good condition, replace them.

- Check the plastic tip [A] of the float valve needle [B]. It should be smooth, without any grooves, scratches, or tears.

★If the plastic tip is damaged [C], replace the needle.

- Push the rod [D] in the other end of the float valve needle, and then release it.

★If the rod does not spring out, replace the float valve needle.

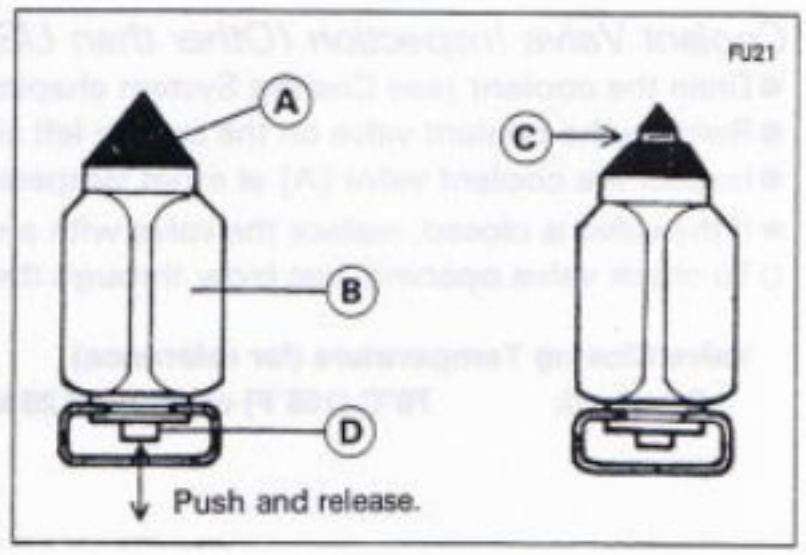

- Check the tapered portion [A] of the pilot screw [B] for wear or damage.

★If the pilot screw is worn or damaged on the tapered portion, it will prevent the engine from idling smoothly. Replace it.

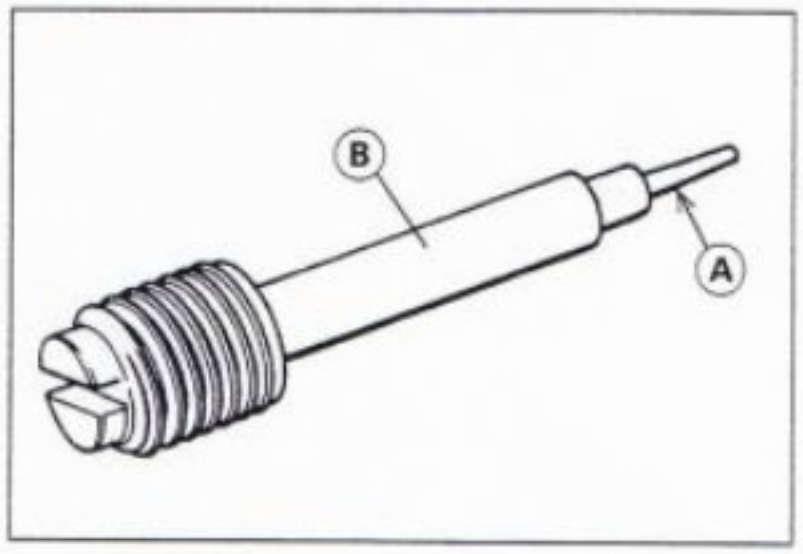

- Check that the vacuum piston [A] moves smoothly in the carburetor body. The surface of the piston must not be excessively worn.

★If the vacuum piston does not move smoothly, or if it is very loose in carburetor body, replace the piston and/or the carburetor.

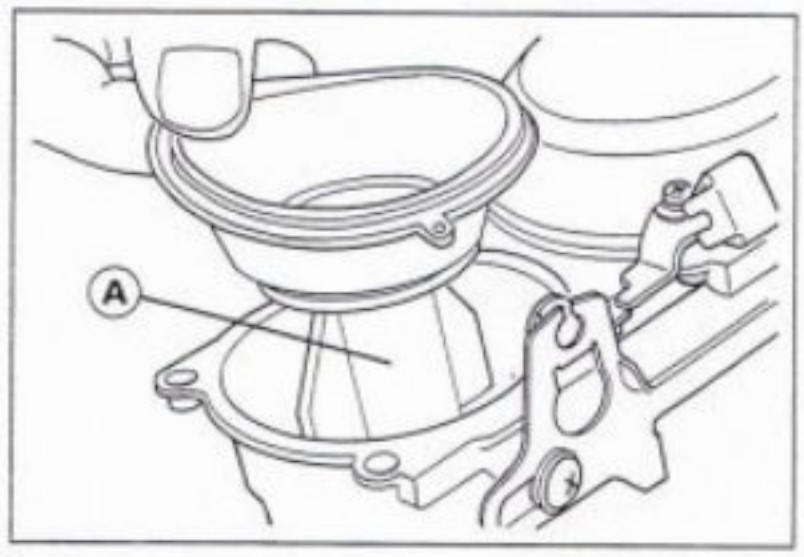

Coolant Filter Cleaning

○ Before winter season starts, clean the coolant filter [A] in the carburetor system.

- Drain the coolant (see Cooling System chapter).
- Remove the coolant filter from the cooling hoses in the carburetor system.
- Blow dirt and sediment off the filter with compressed air.

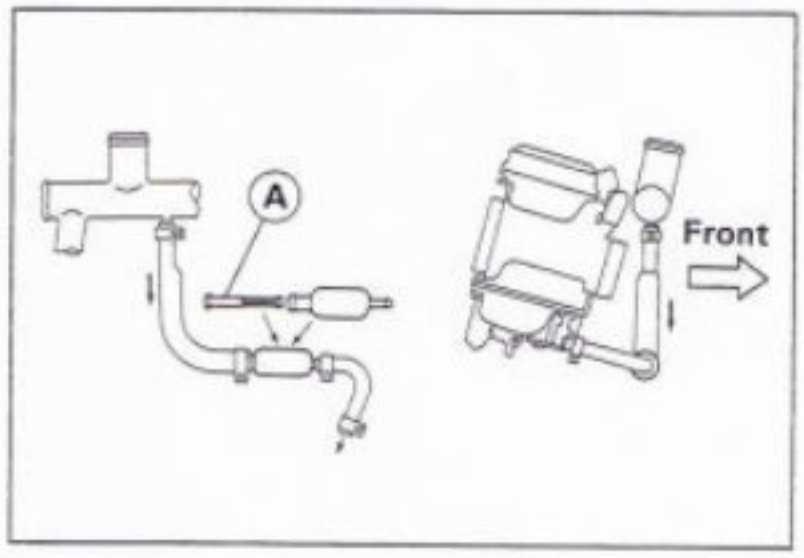

Coolant Valve Inspection (Other than US, Canada Models)

- Drain the coolant (see Cooling System chapter).
- Remove the coolant valve on the engine left side.
- Inspect the coolant valve [A] at room temperature.

★If the valve is closed, replace the valve with a new one.

○To check valve opening, just blow through the valve.

Valve Closing Temperature (for reference)

Standard: 70°C (158°F) or more at 25 kPa (0.25 kg/cm², 3.6 psi)

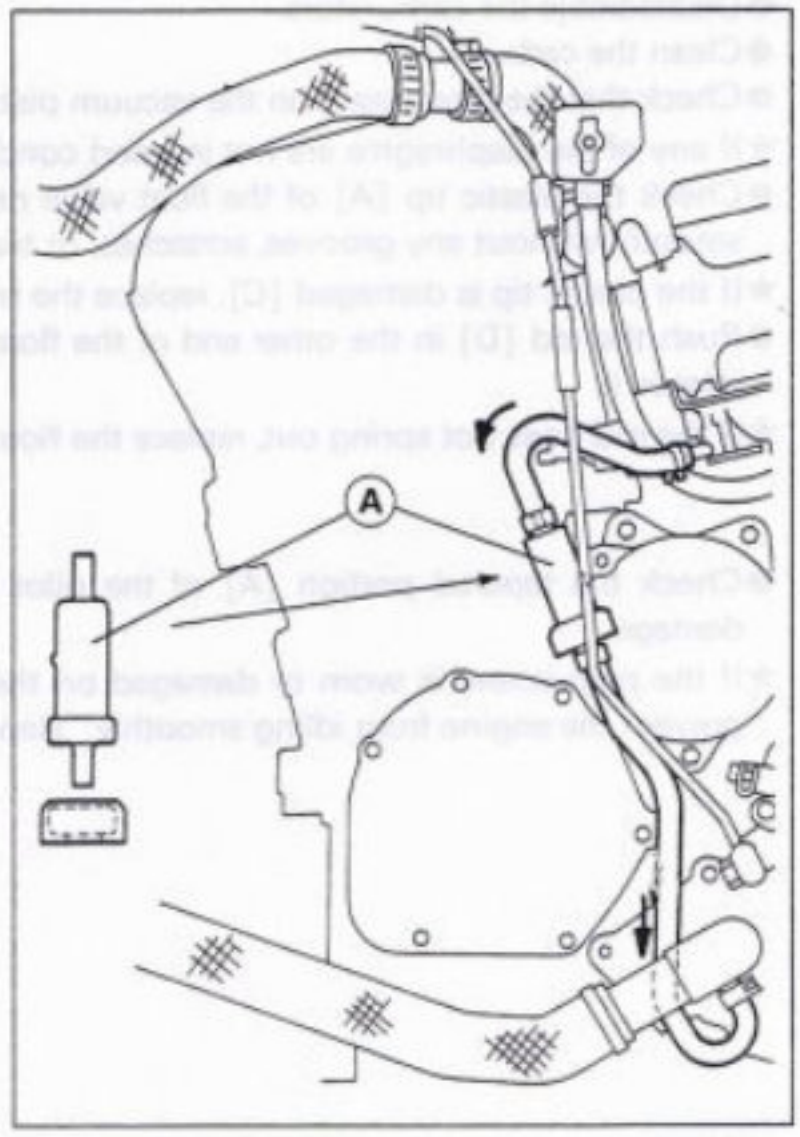

Air Cleaner

Element Removal

- Remove:
  Battery Holder [A] (see Battery Removal in Electrical System chapter)
  Seat (see Frame chapter)
  Screws [B] and Element Cover [C]

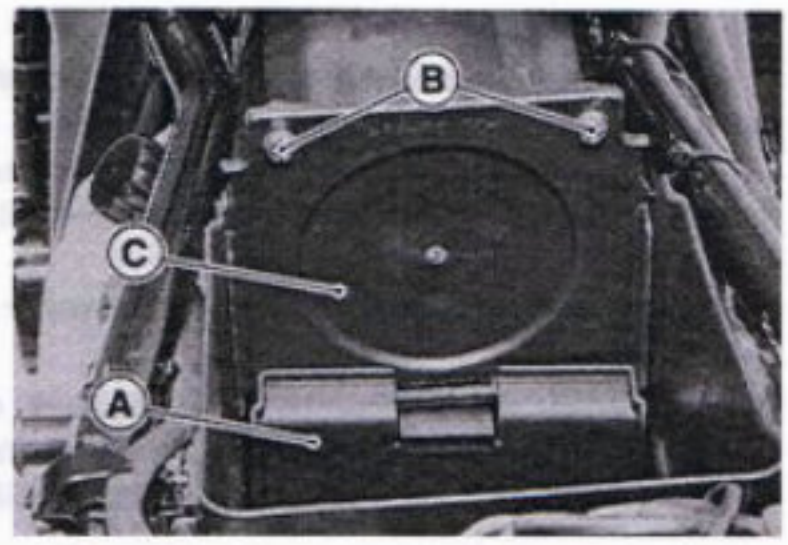

Air Cleaner Element [A]

- Push a clean, lint-free towel into the air cleaner housing to keep dirt or other foreign material from entering.

⚠WARNING

If dirt or dust is allowed to pass through into the carburetors, the butterfly valves may become stuck, possibly causing an accident.

CAUTION

If dirt gets through into the engine, excessive engine wear and possibly engine damage will occur.

Element Installation

- Fit the projections [A] into the slits [B] in the air cleaner housing.

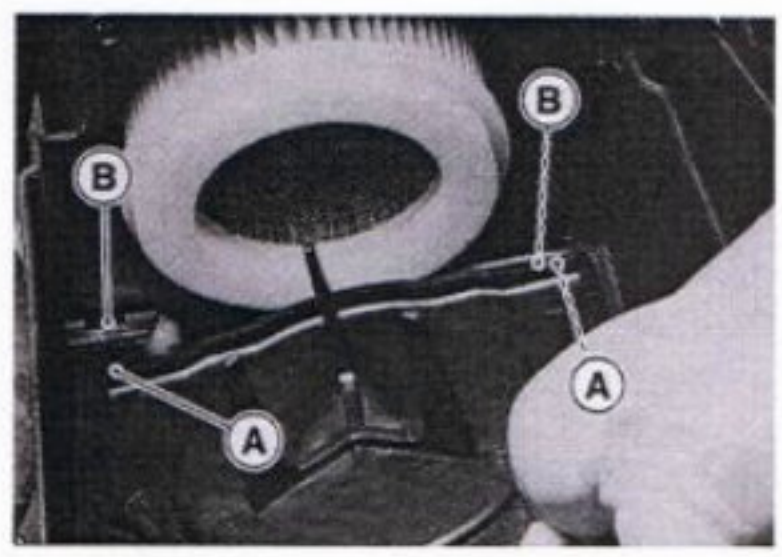

Element Cleaning and Inspection

- Remove the air cleaner element (see Element Removal).
- Clean the element by tapping it lightly to loosen dust.
- Blow away the remaining dust by applying compressed air [A] from the inside to the outside (from the clean side to the dirty side).
- Visually check the element for tears or breaks and check the sponge gasket [B] also.

★If the element or gasket has any tears or breaks, replace the element.

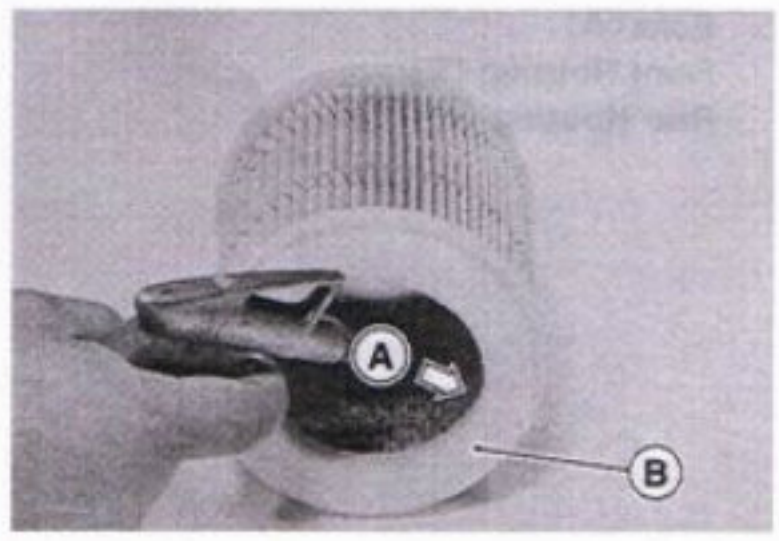

Air Cleaner Draining

A catch tank is provided beneath the air cleaner housing, and catches the water or oil from the bottom of the housing. Usually water or oil does not collect at the bottom of the housing. In the event that rain water is drawn in through the air cleaner, or if engine oil is blown back, drain the housing.

- Visually check the catch tank [A] if the water or oil accumulates in the tank.

★If any water or oil accumulates in the tank, drain it by taking off the drain plug [B] at the lower end of the drain hose.

- Be sure to install the plug firmly, or the air will be drawn in through it.

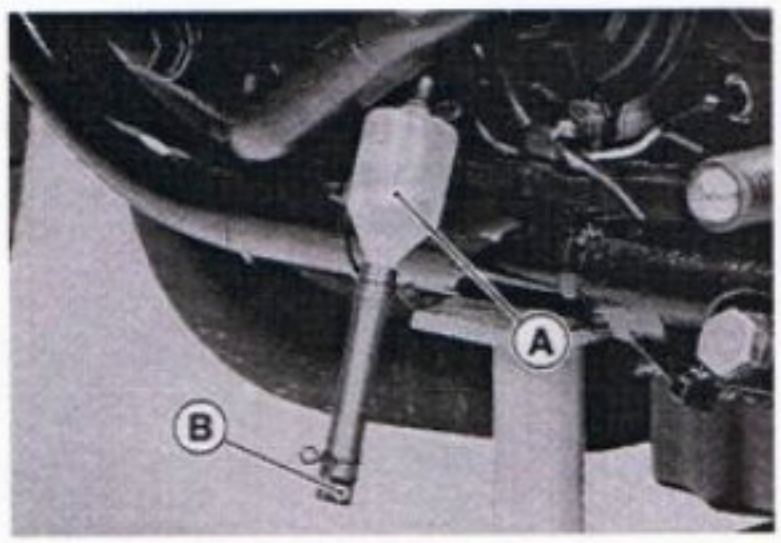

⚠WARNING

Be sure to install the plug in the drain hose after draining. Oil could drain from the open hose and get on the tires which could cause an accident and injury.

Air Cleaner Housing Removal

- Remove:
  Carburetors (see Carburetor Removal)
  Vacuum Switch Valve Hose [A]
  Drain Hose [B]
  Engine Breather Hose [C]

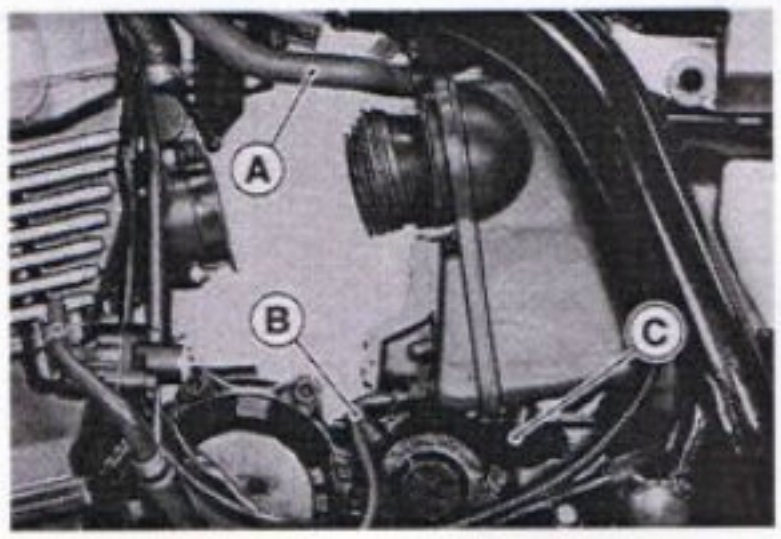

Bolt [A] and Silencer [B]

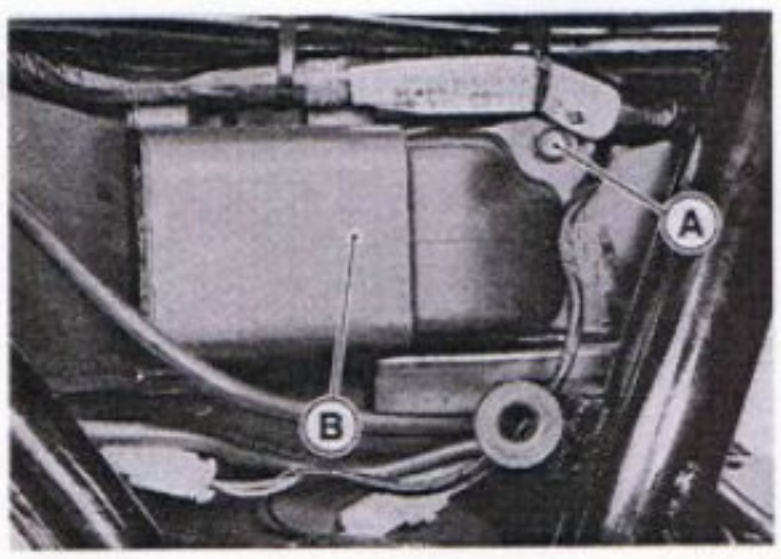

Bolts [A]
Front Housing [B]
Rear Housing [C]

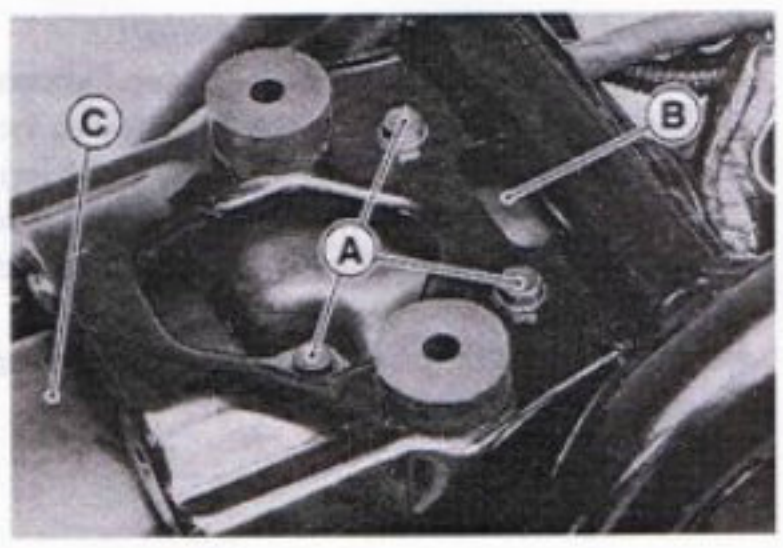

Air Cleaner Housing Installation

- Fit the projections [A] into the slits [B] in the front housing.

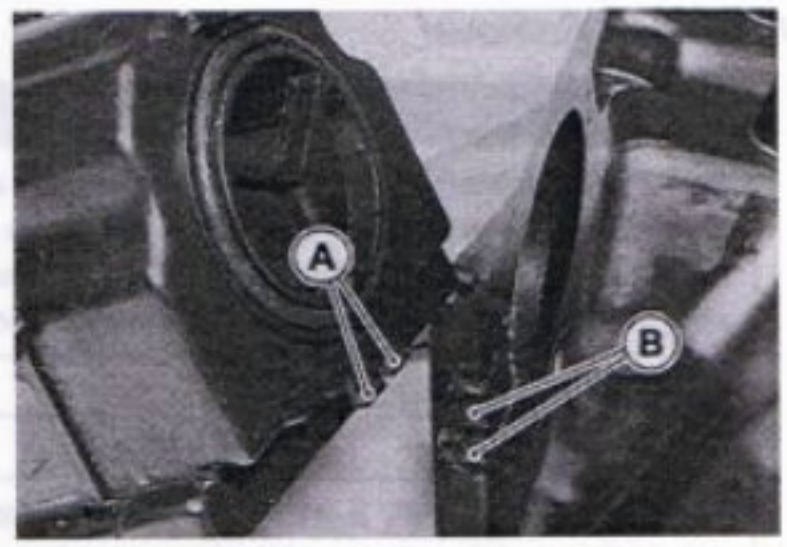

- Fit the projections [A] into the slits [B] in the rear housing.

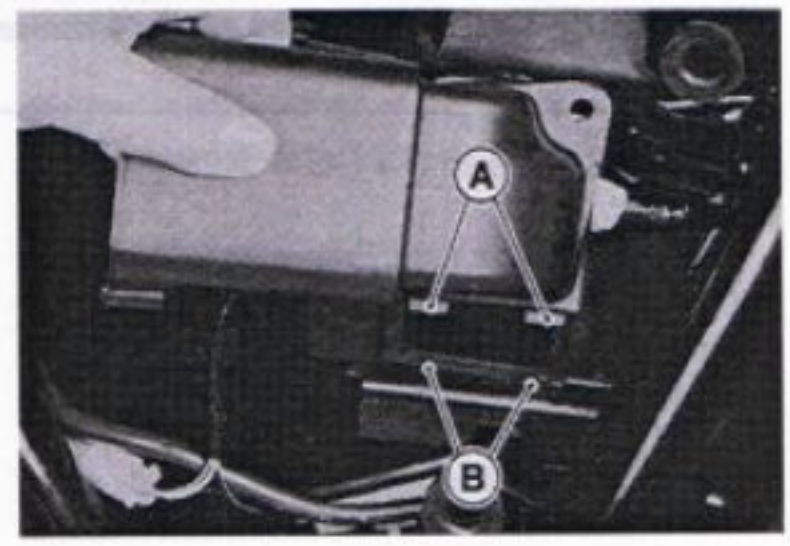

Fuel Tank

Fuel Tank Removal

⚠WARNING

Gasoline is extremely flammable and can be explosive under certain conditions. Turn the ignition switch OFF. Do not smoke. Make sure the area is well-ventilated and free from any source of flame or sparks; this includes any appliance with a pilot light.

CAUTION

For California model, if gasoline, solvent, water or any other liquid enters the canister, the canister's vapor absorbing capacity is greatly reduced. If the canister does become contaminated, replace it with a new one.

- Turn the fuel tap to the ON or RES position.
- Remove:
  Seat, Side Cover (see Frame chapter)
  Fuel Hose [A]
  Vacuum Hose [B]
  Bolts [C]

- Disconnect the fuel level sensor lead connector [A].
- Remove:
  Drain Hose [B]
  Fuel Tank

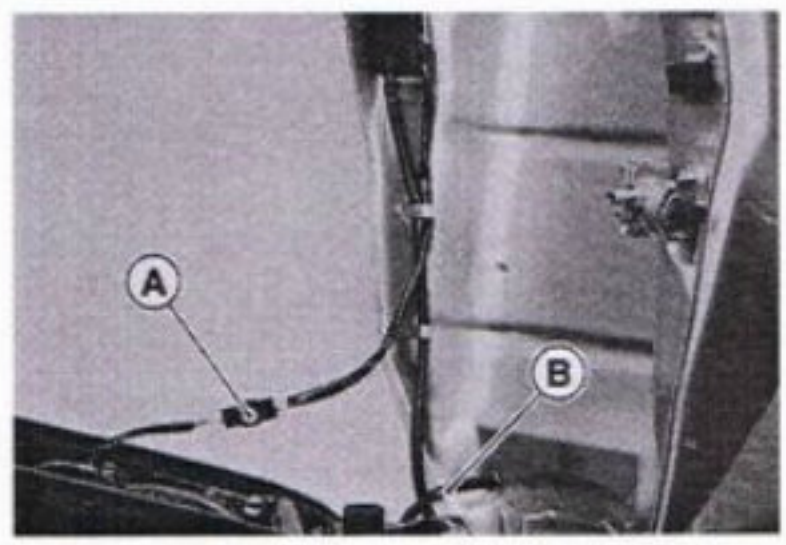

Fuel Tank Installation

- Read the above WARNING.
- Route the hoses and leads correctly (see General Information chapter).
- Secure the leads and hose with clamps.
- Connect the fuel level sensor connector.
- Be sure the hoses are clamped securely.

Fuel Tank Inspection

- Remove the hoses from the fuel tank, and open the tank cap.
- Check to see if the breather pipe and water drain pipe in the tank are not clogged.

★If they are clogged, remove the tank and drain it, and then blow pipes free with compressed air.

CAUTION

Do not apply compressed air to the air vent holes [A] in the tank cap. This could cause damage and clogging of the labyrinth in the cap.

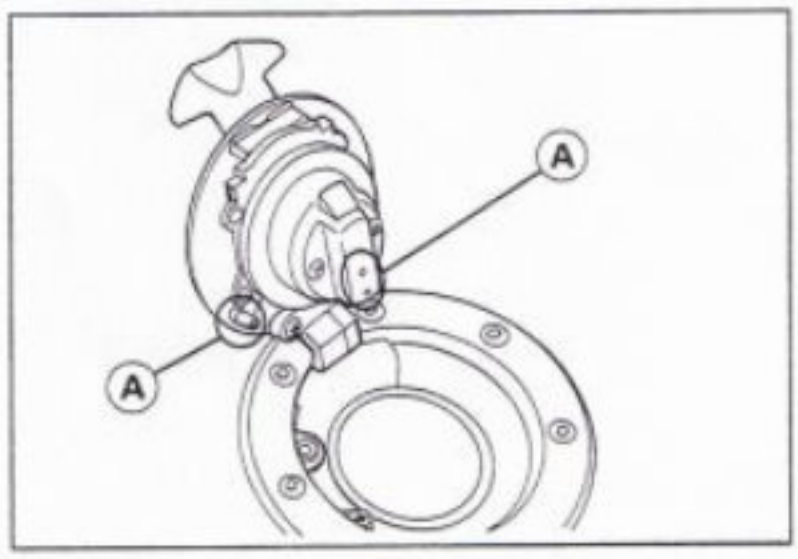

Fuel Tank Cleaning

⚠WARNING

Clean the tank in a well-ventilated area, and take care that there are no sparks or flame anywhere near the working area. Because of the danger of highly flammable liquids, do not use gasoline or low-flash point solvents to clean the tank.

- Remove the fuel tank and drain it.
- Pour some high-flash point solvent into the fuel tank and shake the tank to remove dirt and fuel deposits.
- Pour the solvent out of the tank.
- Remove the fuel tap from the tank (see Fuel Tap Removal).
- Clean the fuel tap filter screens in a high-flash point solvent.
- Pour high-flash point solvent through the tap in all lever positions.
- Dry the tank and the fuel tap with compressed air.
- Install the tap in the tank.
- Install the fuel tank.

Fuel Tap Removal

- Remove the fuel tank and drain it.
- Remove the tap bolts [A] with nylon flat washers and take out the fuel tap.

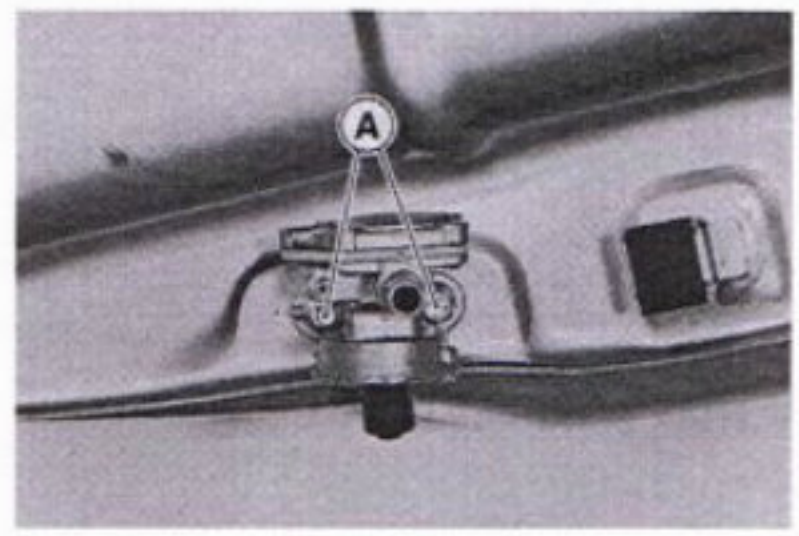

Fuel Tap Installation

- Be sure the O-ring is in good condition to prevent leaks.
- Be sure to clamp the fuel hoses to the tap to prevent leaks.
- Be sure the nylon washers are in good condition to prevent leaks.
- ○ Do not use steel washers in place of the nylon washers, because they will not seal the bolts properly and fuel will leak.

Fuel Tap Inspection

- Remove the fuel tap.
- Check the fuel tap filter screen [A] for any breaks or deterioration.

★If the fuel tap screens have any breaks or are deteriorated, they may allow dirt to reach the carburetor, causing poor running. Replace the fuel tap.

★If the fuel tap leaks, or allows fuel to flow when it is at ON or RES position without engine running, replace the damaged gasket [B] or O-ring [C].

Torque – Fuel Tap Plate Screws : 0.8 N-m (0.08 kg-m, 7 in-lb)
Fuel Tap Diaphragm Cover Screws : 1.0 N-m (0.10 kg-m, 9 in-lb)
Fuel Tap Knob Screw : 1.5 N-m (0.15 kg-m, 13 in-lb)

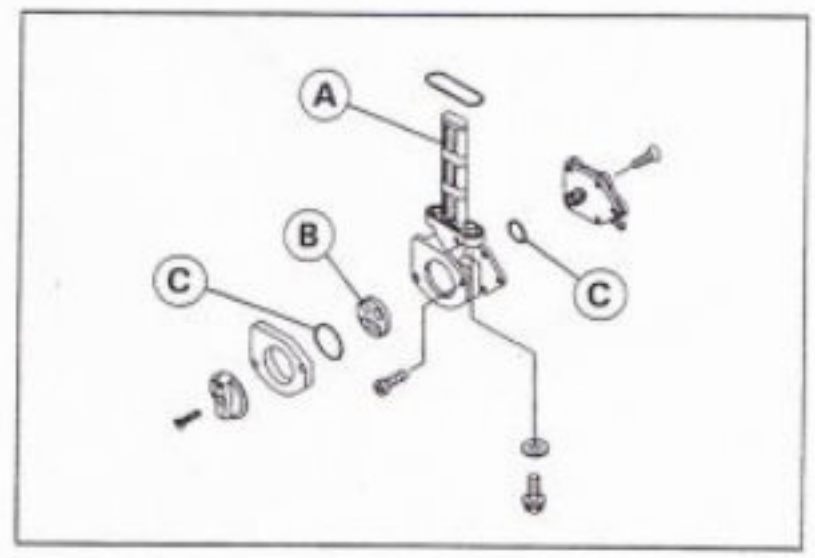

Cooling System

Table of Contents

Exploded View 3-2
Specifications 3-3
Coolant Flow Chart 3-4
Coolant 3-6
  Coolant Deterioration Inspection 3-6
  Coolant Level Inspection 3-6
  Coolant Draining 3-6
  Coolant Filling 3-7
  Pressure Testing 3-8
  Cooling System Flushing 3-9
Water Pump 3-10
  Water Pump Removal 3-10
  Water Pump Installation 3-10
  Water Pump Inspection 3-11
Radiator and Radiator Fan 3-12
  Radiator and Radiator Fan Removal 3-12
  Radiator Inspection 3-12
  Radiator Cap Inspection 3-13
  Hose Inspection 3-13
Thermostat 3-14
  Thermostat Removal 3-14
  Thermostat Installation 3-14
  Thermostat Inspection 3-14
Radiator Fan Switch, Water Temperature Switch 3-15
  Radiator Fan Switch, Water Temperature Switch Removal 3-15
  Radiator Fan Switch, Water Temperature Switch Installation 3-15
  Radiator Fan Switch, Water Temperature Switch Inspection 3-15

Exploded View

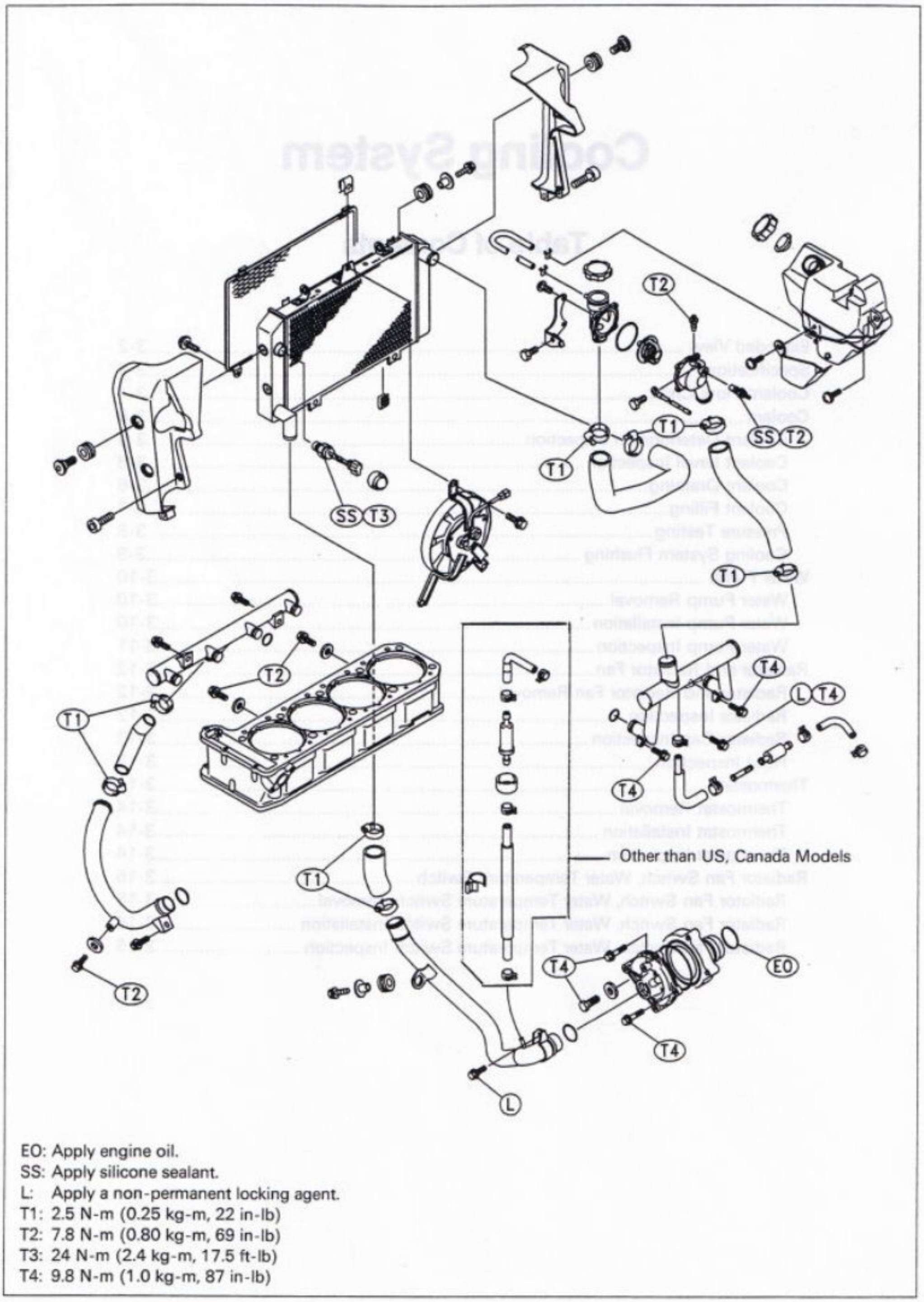

EO: Apply engine oil.
SS: Apply silicone sealant.
L: Apply a non-permanent locking agent.
T1: 2.5 N-m (0.25 kg-m, 22 in-lb)
T2: 7.8 N-m (0.80 kg-m, 69 in-lb)
T3: 24 N-m (2.4 kg-m, 17.5 ft-lb)
T4: 9.8 N-m (1.0 kg-m, 87 in-lb)

Specifications

Item	Standard
Coolant provided when shipping:	
Type (recommended)	Permanent type of antifreeze (soft water and ethylene glycol plus corrosion and rust inhibitor chemicals for aluminum engines and radiators)
Color	Green
Mixed ratio	Soft water 50%, coolant 50%
Freezing point	−35°C (−31°F)
Total amount	3L (reserve tank full level including radiator and engine)
Radiator Cap	
Radiator cap relief pressure	93 ~ 123 kPa (0.95 ~ 1.25kg/ cm², 14 ~ 18 psi)
Thermostat:	
Valve opening temperature	80 ~ 84°C (176 ~ 183 °F)
Valve full opening lift	8 mm or more @95°C (203 °F)

Sealant − Kawasaki Bond (Silicone Sealant): 56019-120

Coolant Flow Chart

Permanent type antifreeze is used as a coolant to protect the cooling system from rust and corrosion. When the engine starts, the water pump (coupled with the oil pump) turns and the coolant circulates.

The thermostat is a wax pellet type which opens or closes with coolant temperature changes. The thermostat continuously changes its valve opening to keep the coolant temperature at the proper level. When coolant temperature is below 80 ~ 84°C, the thermostat closes so that the coolant flow is restricted through the air bleeder hole, causing the engine to warm up more quickly. When coolant temperature is more than 80 ~ 84°C, the thermostat opens and the coolant flows.

When the coolant temperature goes up beyond 95 ~ 101°C, the radiator fan switch conducts to operate the radiator fan. The radiator fan draws air through the radiator core when there is not sufficient air flow such as at low speeds. This increases up the cooling action of the radiator. When the temperature is below 90 ~ 96°C, the fan switch opens and the radiator fan stops.

In this way, this system controls the engine temperature within narrow limits where the engine operates most efficiently even if the engine load varies.

The system is pressurized by the radiator cap to suppress boiling and the resultant air bubbles which can cause engine overheating. As the engine warms up, the coolant in the radiator and the water jacket expands. The excess coolant flows through the radiator cap and hose to the reserve tank to be stored there temporarily. Conversely, as the engine cools down, the coolant in the radiator and the water jacket contracts, and the stored coolant flows back to the radiator from the reserve tank.

The radiator cap has two valves. One is a pressure valve which holds the pressure in the system when the engine is running. When the pressure exceeds 0.95 ~ 1.25 kg/cm², the pressure valve opens and releases the pressure to the reserve tank. As soon as pressure escapes, the valve closes, and keeps the pressure at 0.95 ~ 1.25 kg/cm². When the engine cools down, another small valve (vacuum valve) in the cap opens. As the coolant cools, the coolant contracts to form a vacuum in the system. The vacuum valve opens and allows the coolant from the reserve tank to enter the radiator.

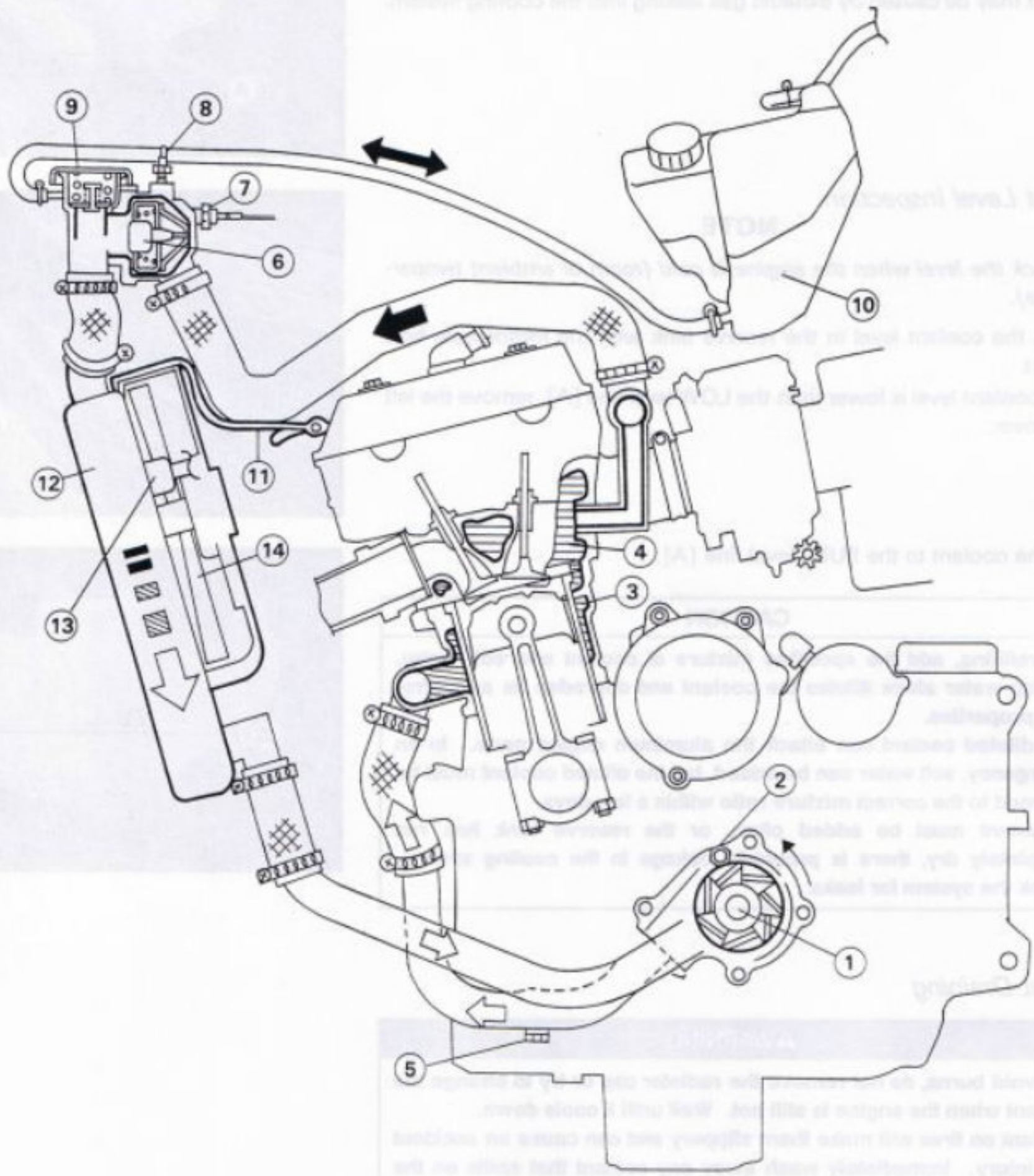

: Hot Coolant
: Cold Coolant

1. Water Pump
2. Water Pump Air Bleeder Bolt
3. Cylinder Jacket
4. Cylinder Head Jacket
5. Drain Bolt
6. Thermostat
7. Water Temperature Switch
8. Thermostat Housing Air Bleeder Bolt
9. Radiator Cap
10. Reserve Tank
11. Baffle Plate
12. Radiator
13. Radiator Fan Switch
14. Radiator Fan

Coolant

Coolant Deterioration Inspection

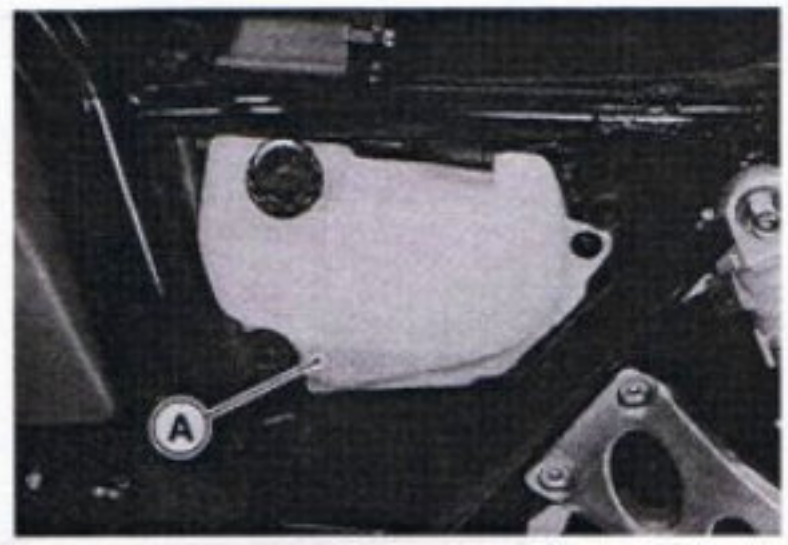

- Visually inspect the coolant in the reserve tank [A].

★If whitish cotton-like wafts are observed, aluminum parts in the cooling system are corroded. If the coolant is brown, iron or steel parts are rusting. In either case, flush the cooling system.

★If the coolant gives off an abnormal smell, check for a cooling system leak. It may be caused by exhaust gas leaking into the cooling system.

Coolant Level Inspection

NOTE

○*Check the level when the engine is cold (room or ambient temperature).*

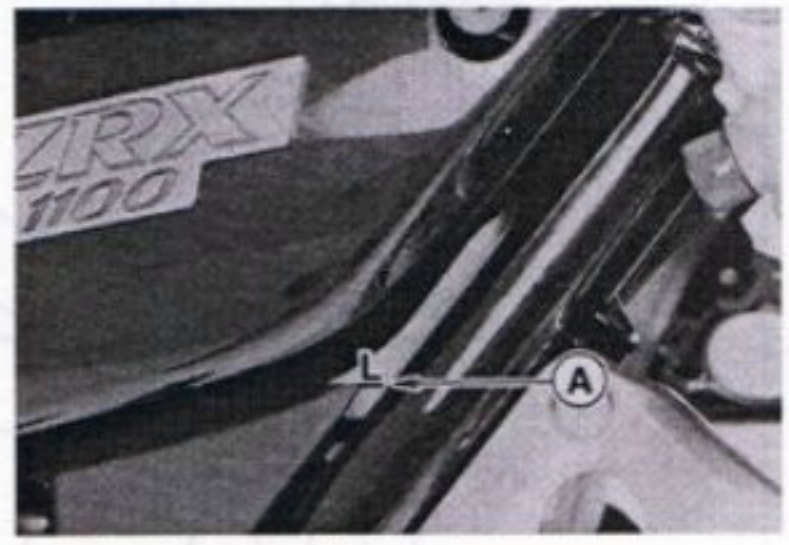

- Check the coolant level in the reserve tank with the motorcycle held upright.

★If the coolant level is lower than the LOW level line [A], remove the left side cover.

- Add the coolant to the FULL level line [A].

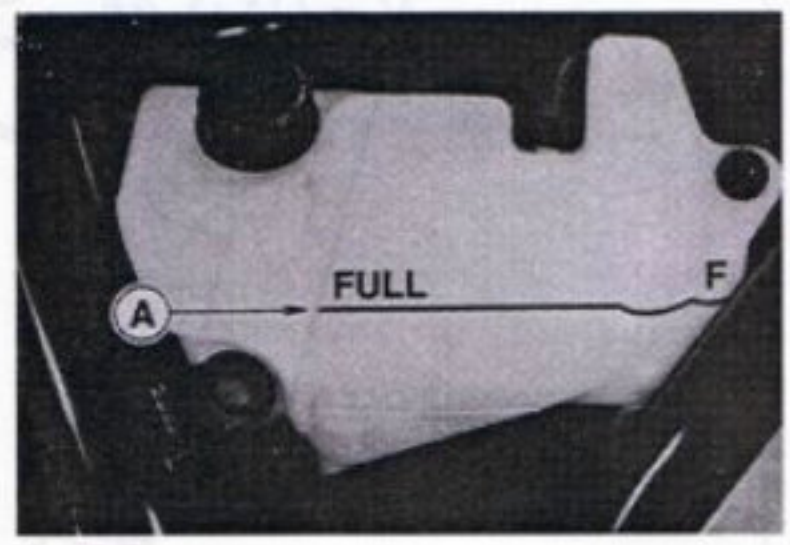

CAUTION

For refilling, add the specified mixture of coolant and soft water. Adding water alone dilutes the coolant and degrades its anticorrosion properties.
The diluted coolant can attack the aluminum engine parts. In an emergency, soft water can be added, but the diluted coolant must be returned to the correct mixture ratio within a few days.
If coolant must be added often, or the reserve tank has run completely dry, there is probably leakage in the cooling system. Check the system for leaks.

Coolant Draining

⚠WARNING

To avoid burns, do not remove the radiator cap or try to change the coolant when the engine is still hot. Wait until it cools down.
Coolant on tires will make them slippery and can cause an accident and injury. Immediately wash away any coolant that spills on the frame, engine, wheels, or other painted parts.
Since coolant is harmful to the human body, do not use for drinking.

- Remove the fuel tank (see Fuel System chapter).
- Place a container under the drain plug [A], then remove the drain plug.

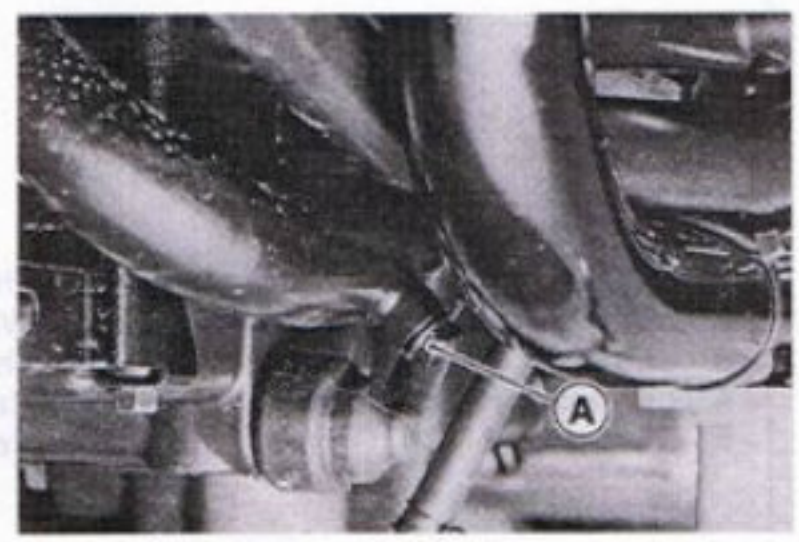

- Remove the radiator cap [A] in two steps. First turn the cap counter-clockwise to the first stop. Then push and turn it further in the same direction and remove the cap.
- ○The coolant will drain from the radiator and engine.

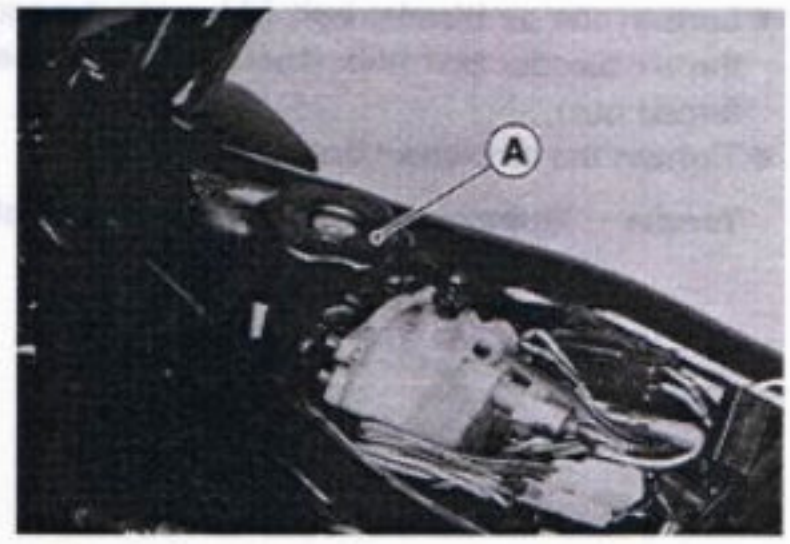

- Remove:
  Left Side Cover (see Frame chapter)
  Reserve Tank Screws [A]
- Turn over the reserve tank, remove the cap [B], and pour the coolant into a suitable container.

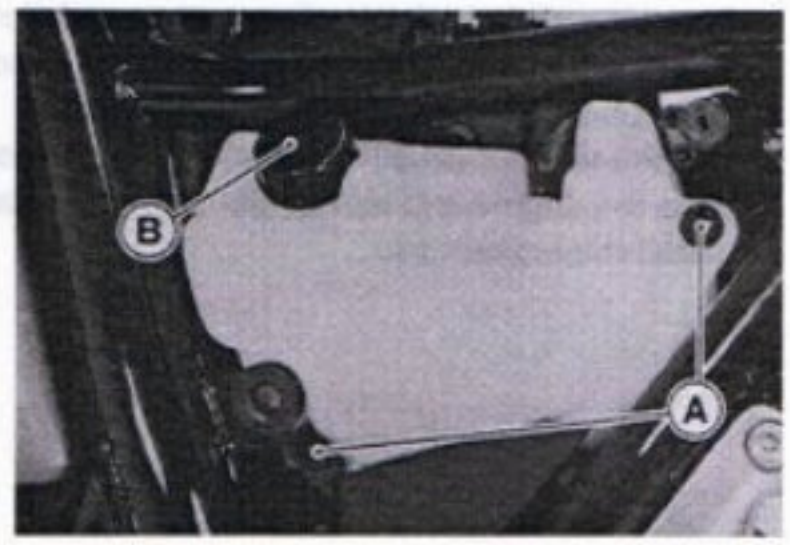

Coolant Filling

- Tighten the drain plug.

Torque – Drain Plug : 7.8 N-m (0.80 kg-m, 69 in-lb)

- Fill the radiator up to the filler neck [A] with coolant, and install the radiator cap.

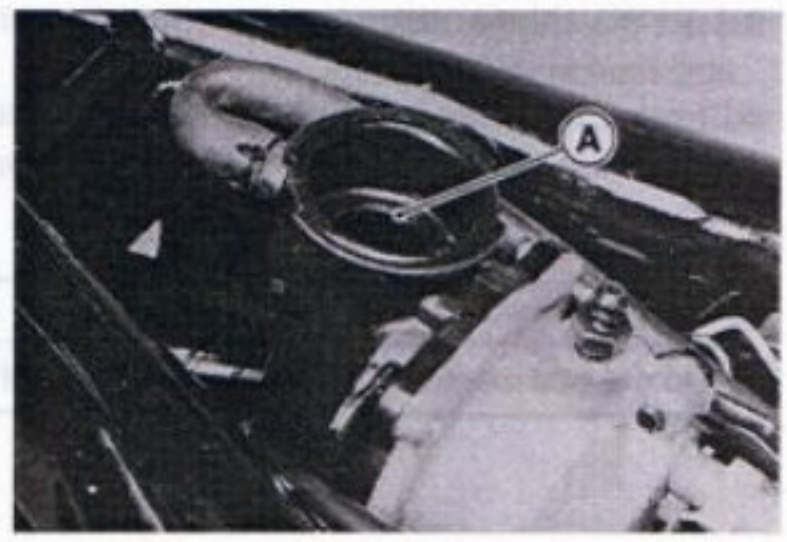

NOTE

○*Pour in the coolant slowly so that it can expel the air from the engine and radiator.*

- Fill the reserve tank up to the FULL level line with coolant, and install the cap.

CAUTION
Soft or distilled water must be used with the antifreeze (see Specifications in this chapter) in the cooling system. **If hard water is used in the system, it causes scales accumulation in the water passages, and considerably reduces the efficiency of the cooling system.**

Water and Coolant Mixture Ratio (when shipping)

Soft Water	:	**50%**
Coolant	:	**50%**
Freezing Point	:	**−35°C (−31°F)**
Total Amount	:	**3 L**

NOTE

○*Choose a suitable mixture ratio by referring to the coolant manufacturer's directions.*

- Loosen the air bleeder bolt [A], until the coolant begins to flow out the air bleeder bolt hole (that is, until all the remaining air has been forced out).
- Tighten the air bleeder bolt.

Torque – Thermostat Housing Air Bleeder Bolt : 7.8 N-m (0.80 kg-m, 69 in-lb)

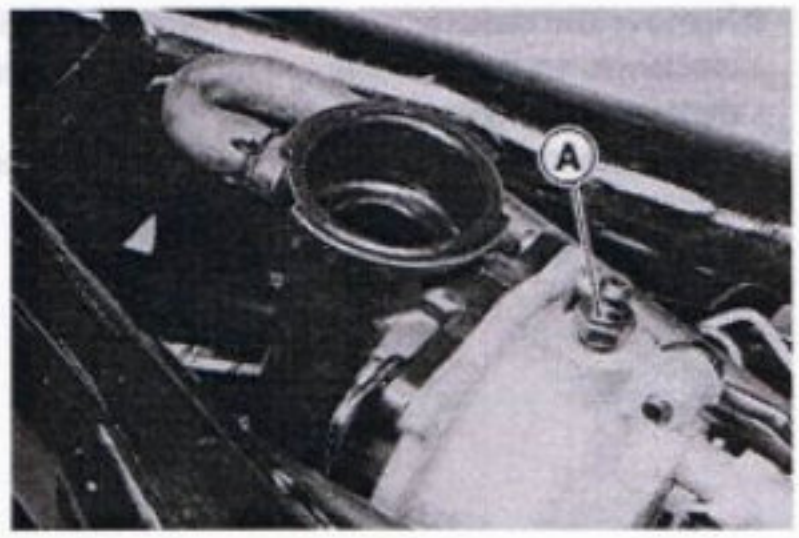

- Bleed the air from the cooling system as follows.
  - ○ Start the engine with the radiator cap removed and run it until no more air bubbles [A] can be seen in the coolant.
  - ○ Tap the radiator hoses to force any air bubbles caught inside.
  - ○ Stop the engine and add coolant up to the radiator filler neck.
- Install the radiator cap.

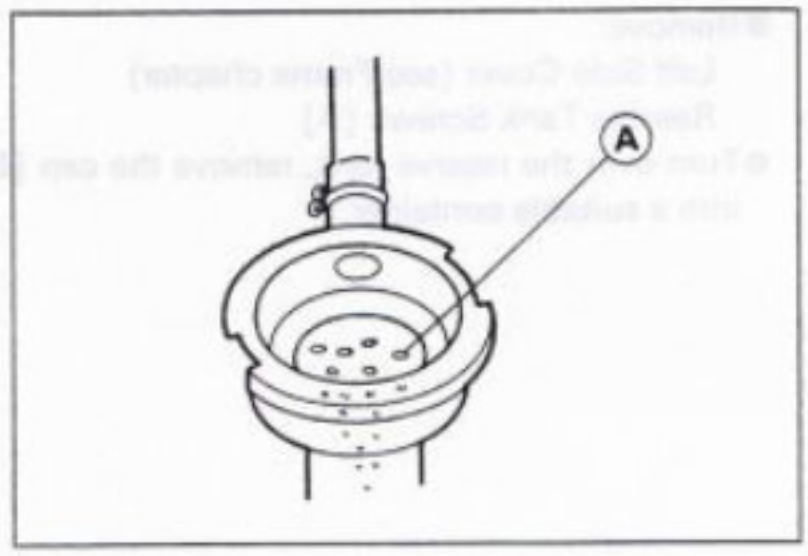

- Start the engine, warm it up thoroughly until the radiator fan turns on and then stop the engine.
- Check the coolant level in the reserve tank after the engine cools down.

★ If the coolant level is lower than the "L" level line, add coolant to the "F" level line.

CAUTION
Do not add more coolant above the "F" level line.

Pressure Testing

- Remove the fuel tank (see Fuel System chapter).
- Remove the radiator cap, and install a cooling system pressure tester [A] on the filler neck.

NOTE

○ *Wet the cap sealing surfaces with water or coolant to prevent pressure leaks.*

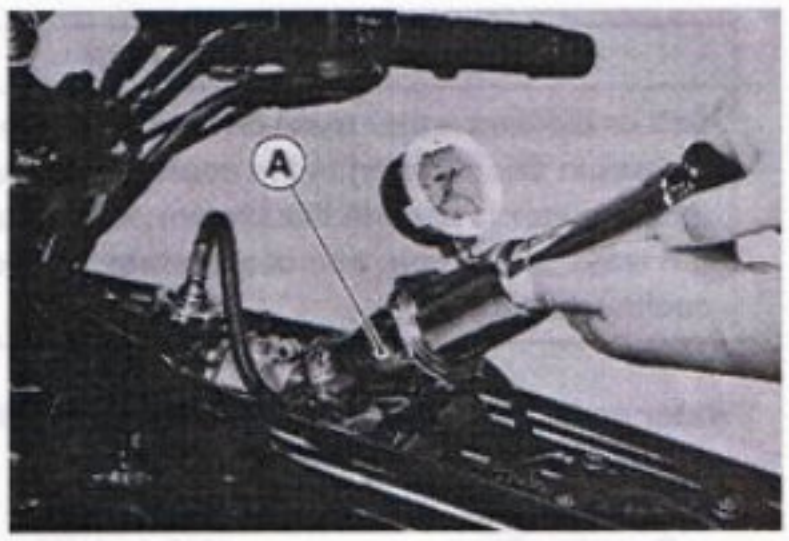

- Build up pressure in the system carefully until the pressure reaches 123 kPa (1.25 kg/cm², 18 psi).

CAUTION
During pressure testing, do not exceed the pressure for which the system is designed. The maximum pressure is 123 kPa (1.25 kg/cm², 18 psi).

- Watch the gauge for at least 6 seconds.

★ If the pressure holds steady, the system is all right.

★ If the pressure drops and no external source is found, check for internal leaks. Droplets in the engine oil indicate internal leakage. Check the cylinder head gasket and the water pump.

- Remove the pressure tester, replenish the coolant, and install the radiator cap.

Cooling System Flushing

Over a period of time, the cooling system accumulates rust, scale, and lime in the water jacket and radiator. When this accumulation is suspected or observed, flush the cooling system. If this accumulation is not removed, it will clog up the water passage and considerably reduce the efficiency of the cooling system.

- Drain the cooling system (see Coolant Draining).
- Fill the cooling system with fresh water mixed with a flushing compound.

CAUTION
Do not use a flushing compound which is harmful to the aluminum engine and radiator. Carefully follow the instructions supplied by the manufacturer of the cleaning product.

- Warm up the engine, and run it at normal operating temperature for about ten minutes.
- Stop the engine, and drain the cooling system.
- Fill the system with fresh water.
- Warm up the engine and drain the system.
- Repeat the previous two steps once more.
- Fill the system with a permanent type coolant and bleed the air from the system (see Coolant Filling).

Water Pump

Water Pump Removal

- Drain the coolant (see Coolant Draining).
- Remove:
  Bolts [A]
  Slave Cylinder Cover [B]

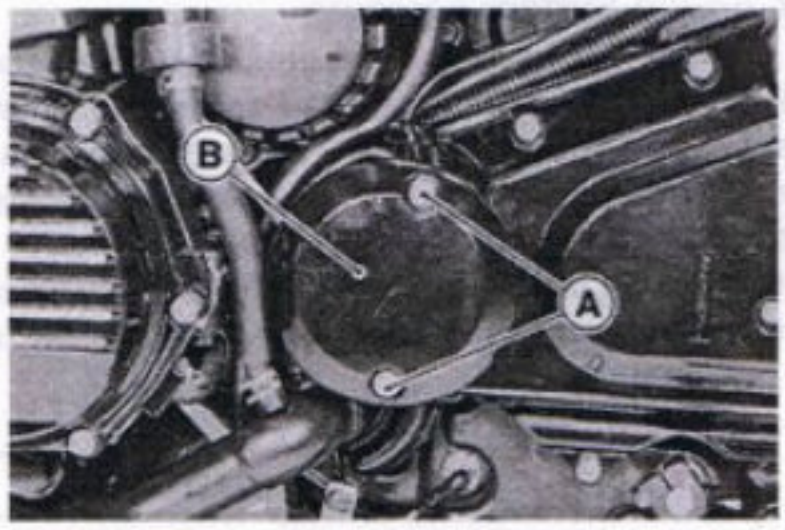

Coolant Hose [A] (Other than US, Canada Models)
Bolts [B]
Engine Sprocket Cover [C]

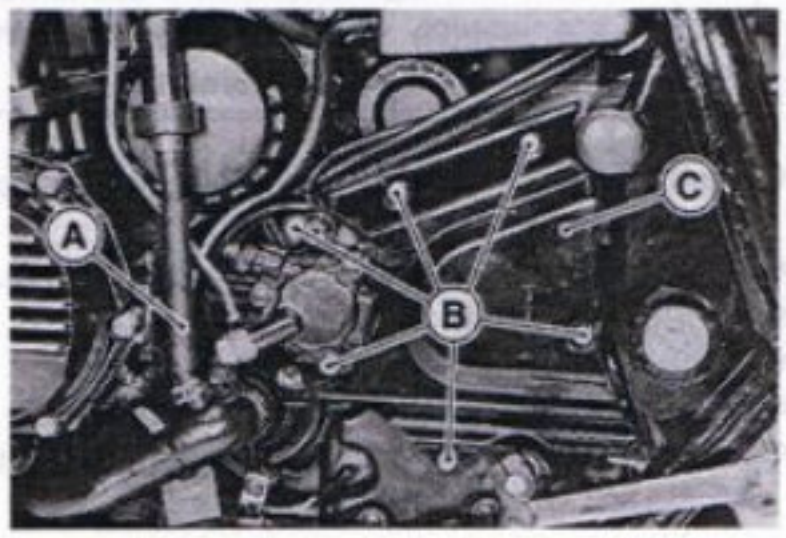

Bolts [A]
Water Pump Inlet Pipe [B]

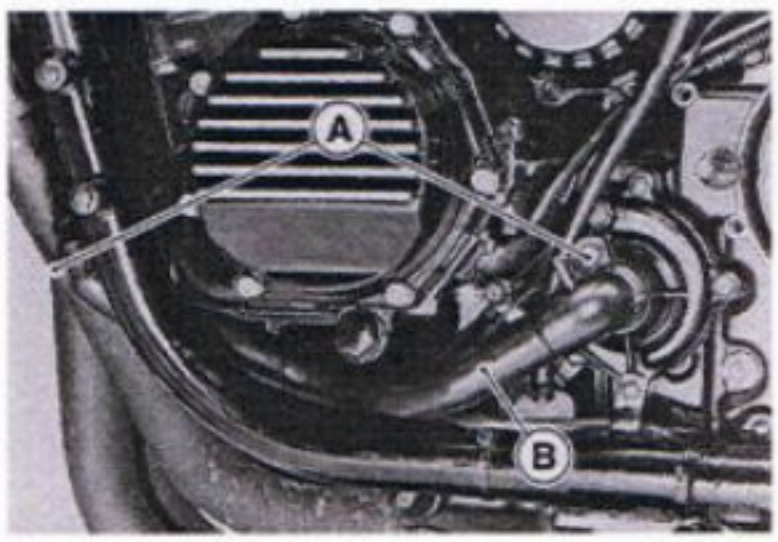

Bolt [A]
Water Pump Outlet Pipe [B]
Water Pump Mounting Bolts [C]
Water Pump

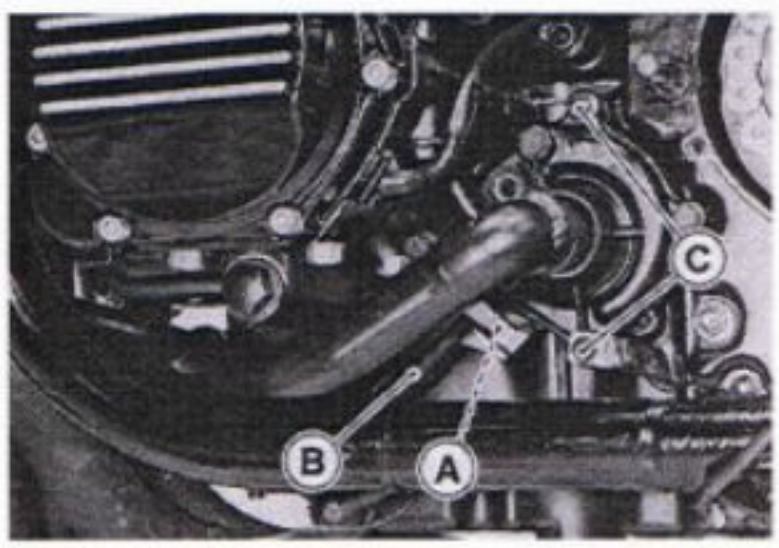

Water Pump Installation

- Apply engine oil to the O-ring [A].
- Note the position of the oil pump shaft tang [B] and turn the water pump shaft so that the tang fits into the slot [C].
- Tighten the water pump mounting bolts.

Torque – Water Pump Mounting Bolts : 9.8 N-m (1.0 kg-m, 87 in-lb)

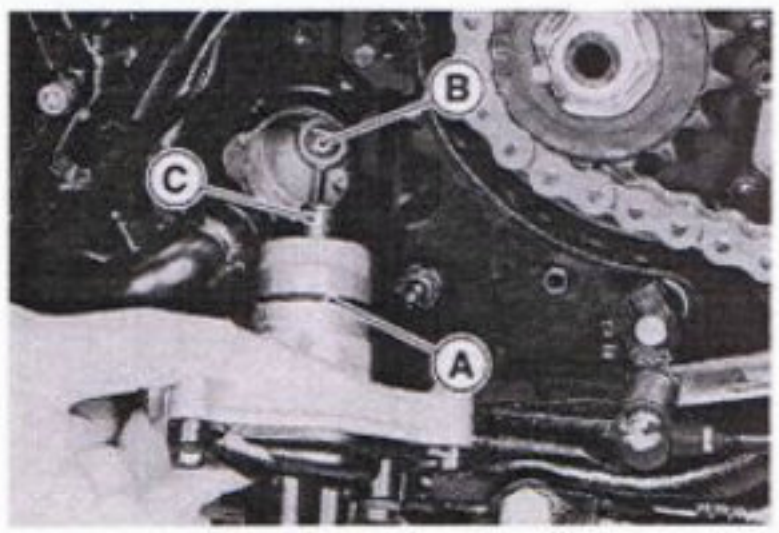

Water Pump Inspection

- Check the drainage outlet passage [A] at the bottom of the water pump for coolant leakage.

★If the mechanical seal is damaged, the coolant leaks through the seal and drains through the passage. Replace the water pump unit.

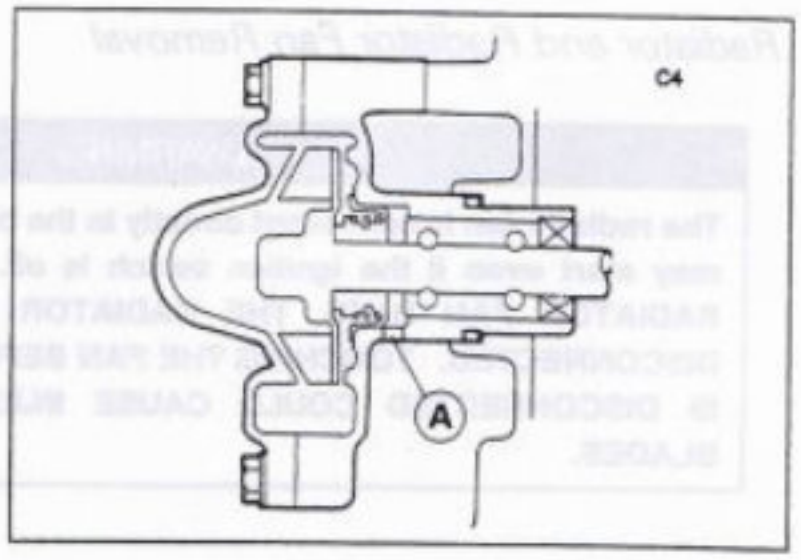

- Visually inspect the impeller [A].

★If the surface is corroded, or if the blades are damaged, replace the water pump unit.

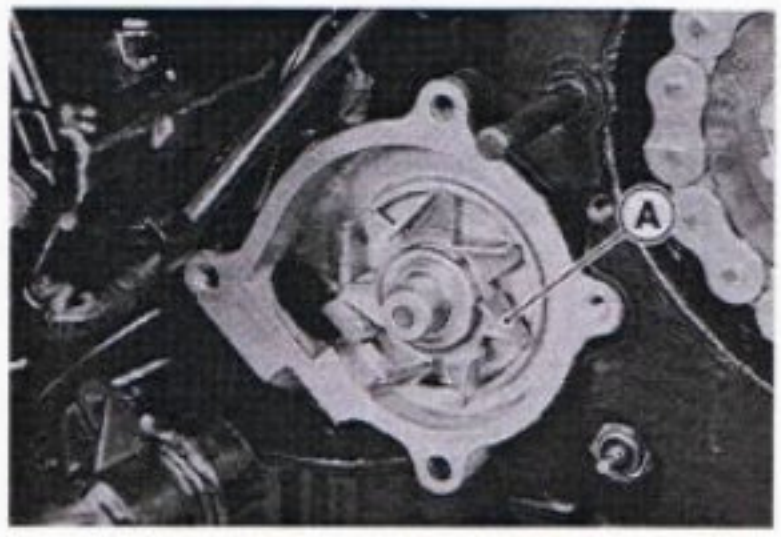

Radiator and Radiator Fan

Radiator and Radiator Fan Removal

⚠WARNING

The radiator fan is connected directly to the battery. The radiator fan may start even if the ignition switch is off. NEVER TOUCH THE RADIATOR FAN UNTIL THE RADIATOR FAN CONNECTOR IS DISCONNECTED. TOUCHING THE FAN BEFORE THE CONNECTOR IS DISCONNECTED COULD CAUSE INJURY FROM THE FAN BLADES.

●Remove:
Fuel Tank (see Fuel System chapter)
Coolant (Drain)
Radiator Fan Switch Lead Connector[A]
Radiator Fan Lead Connector [B]

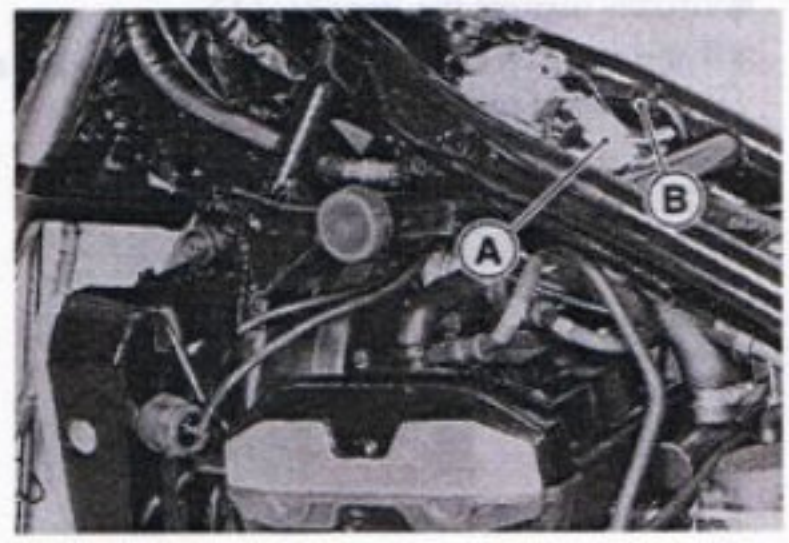

Bolts [A]
Radiator Cover [B]
Radiator Hose [C]
Horn Lead Connectors [D]
Radiator Mounting Bolts [E]

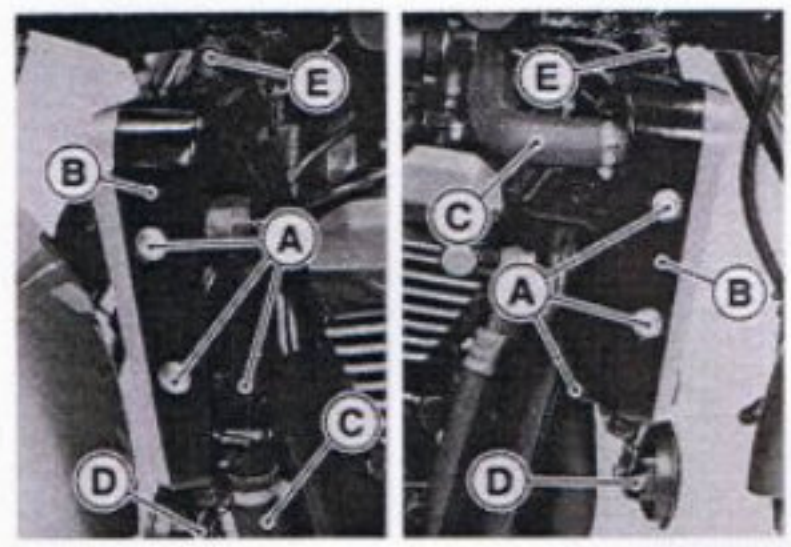

Radiator Fan Mounting Bolts [A]
Radiator Fan [B]

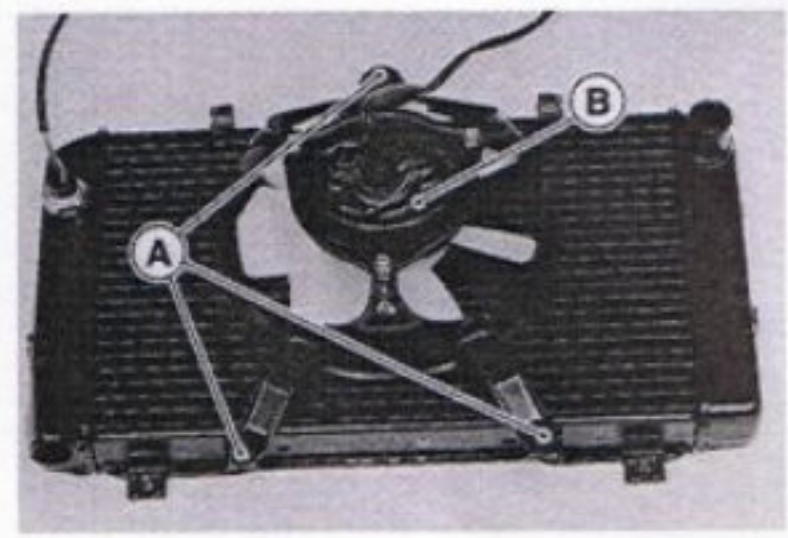

Radiator Inspection

●Check the radiator core.
★If there are obstructions to air flow, remove them.
★If the corrugated fins [A] are deformed, carefully straighten them.
★If the air passages of the radiator core are blocked more than **20%** by unremovable obstructions or irreparably deformed fins, replace the radiator with a new one.

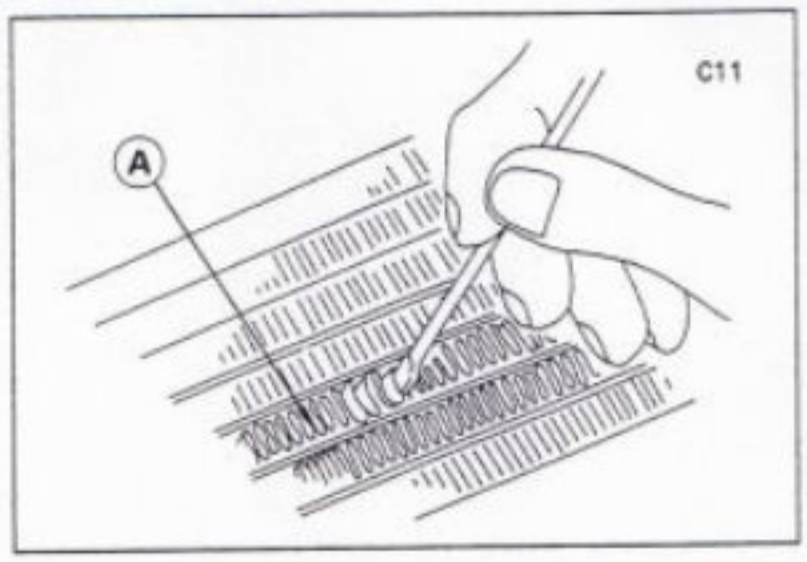

CAUTION

When cleaning the radiator with steam cleaner, be careful of the following to prevent radiator damage.
Keep the steam gun [A] away more than 0.5 m [B] from the radiator core.
Hold the steam gun perpendicular to the core surface.
Run the steam gun following the core fin direction.

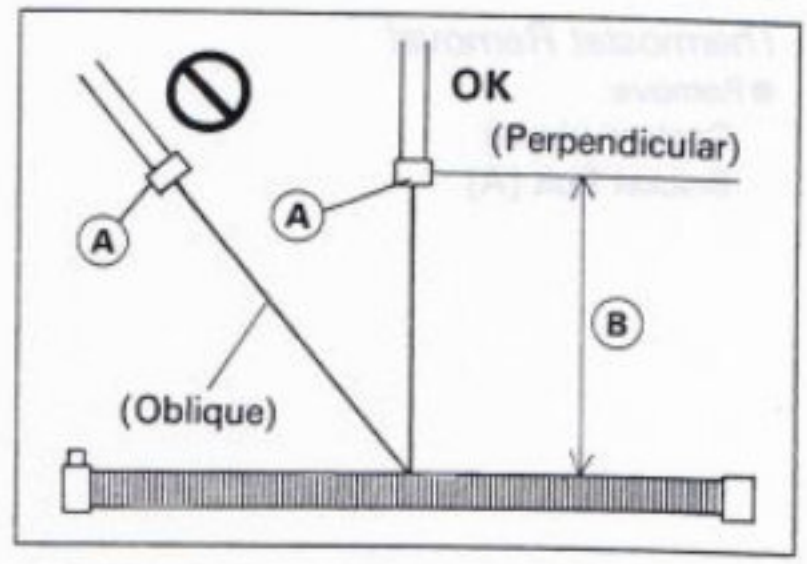

Radiator Cap Inspection

- Check the condition of the top and bottom valve seals of the radiator cap.

★If any one of them shows visible damage, replace the cap.
Bottom Valve Seal [A]
Top Valve Seal [B]
Valve Spring [C]

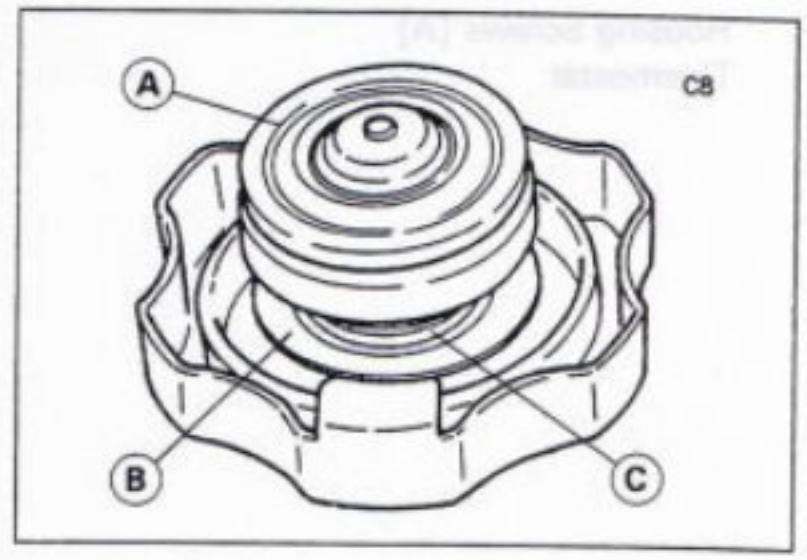

- Install the cap [A] on a cooling system pressure tester [B].

NOTE

○ *Wet the cap sealing surfaces with water or coolant to prevent pressure leaks.*

- Watching the pressure gauge, slowly pump the pressure tester to build up the pressure. The gauge hand must remain within the relief pressure range in the table below at least 6 seconds. Continue to pump the tester until the relief valve opens, indicated by the gauge hand flicking downward. The relief valve must open within the specified range.

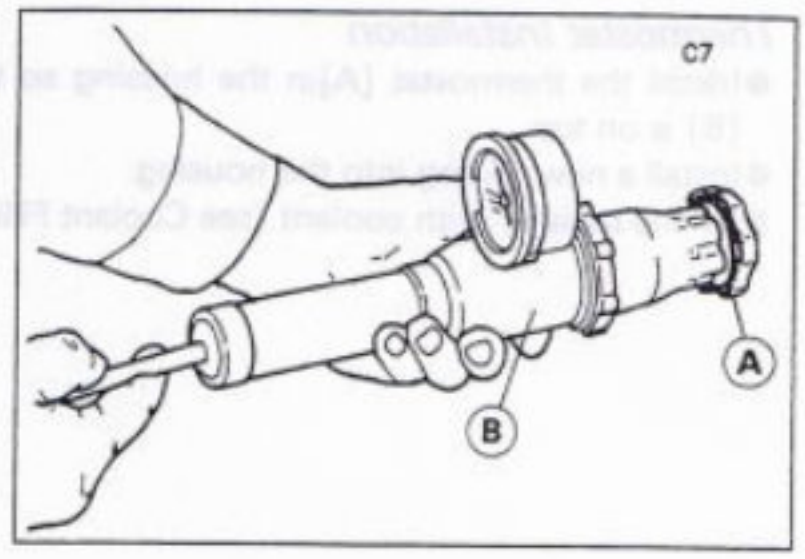

Radiator Cap Relief Pressure
Standard: 93 ~ 123 kPa (0.95 ~ 1.25 kg/cm², 14 ~ 18 psi)

★If the cap cannot hold the specified pressure, or if it holds too much pressure, replace it with a new one.

Hose Inspection

- In accordance with the Periodic Maintenance Chart, visually inspect the radiator hoses [A] for signs of deterioration. Squeeze the hose. A hose should not be hard and brittle, nor should it be soft or swollen.
- Replace any damaged hose.

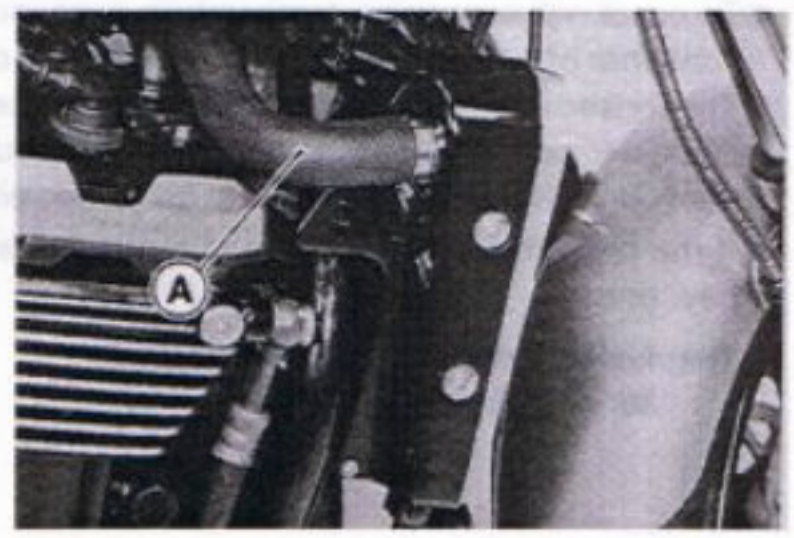

Thermostat

Thermostat Removal

- Remove:
  Coolant (drain)
  Bracket Bolt [A]

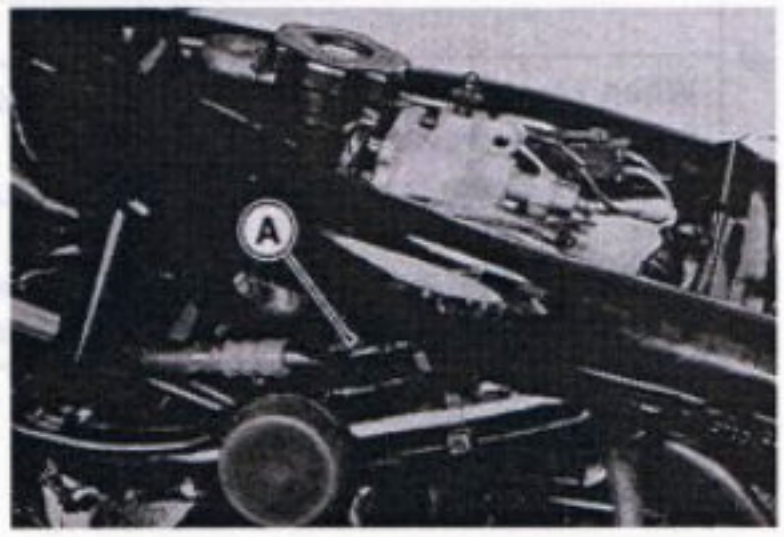

Housing Screws [A]
Thermostat

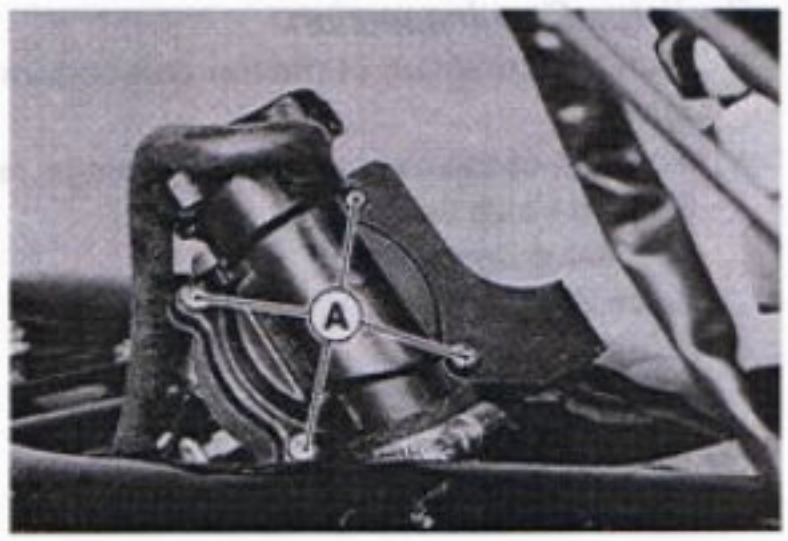

Thermostat Installation

- Install the thermostat [A]in the housing so that the air bleeder hole [B] is on top.
- Install a new O-ring into the housing.
- Fill the radiator with coolant (see Coolant Filling).

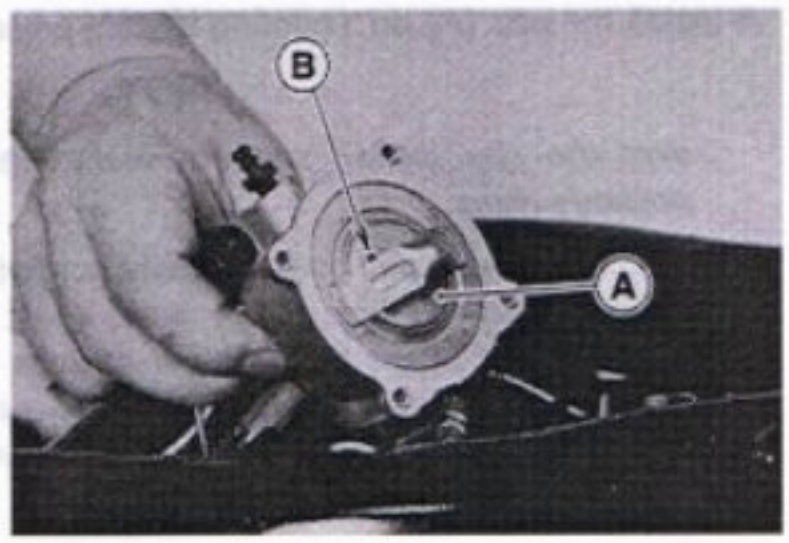

Thermostat Inspection

- Remove the thermostat, and inspect the thermostat valve [A] at room temperature.

★If the valve is open, replace the thermostat with a new one.

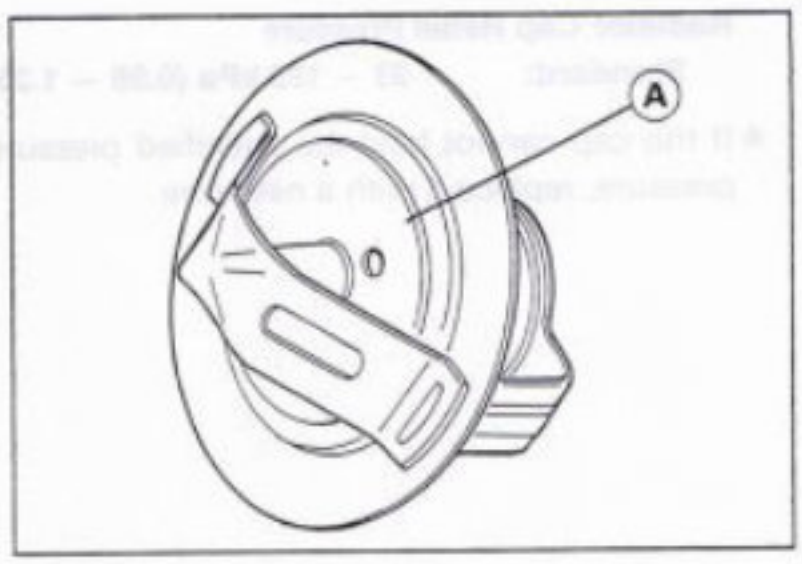

- To check valve opening temperature, suspend the thermostat [A] in a container of water and raise the temperature of the water.

○The thermostat must be completely submerged and must not touch the container sides or bottom. Suspend an accurate thermometer [B] in the water. It must not touch the container, either.

★If the measurement is out of the range, replace the thermostat with a new one.

Thermostat Valve Opening Temperature
80 ~ 84°C (176 ~ 183°F)

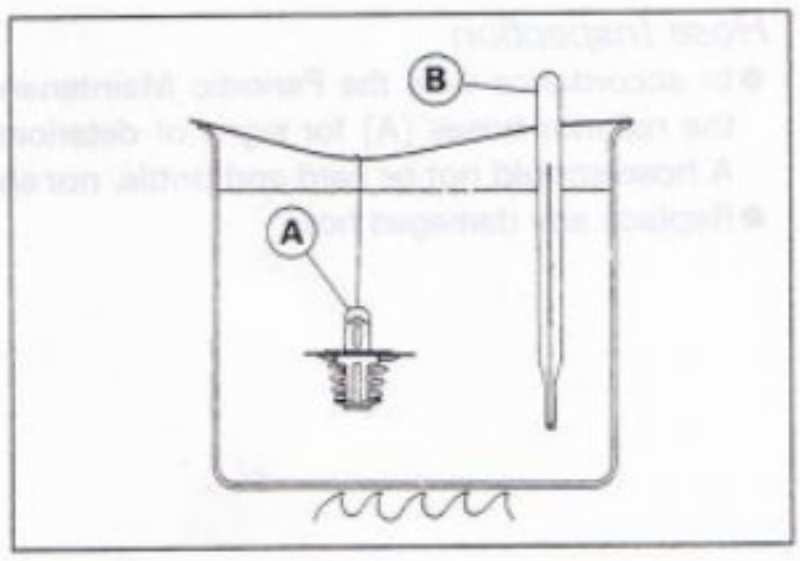

Radiator Fan Switch, Water Temperature Switch

Radiator Fan Switch, Water Temperature Switch Removal

CAUTION

The fan switch or the water temperature switch should never be allowed to fall on a hard surface. Such a shock to their parts can damage them.

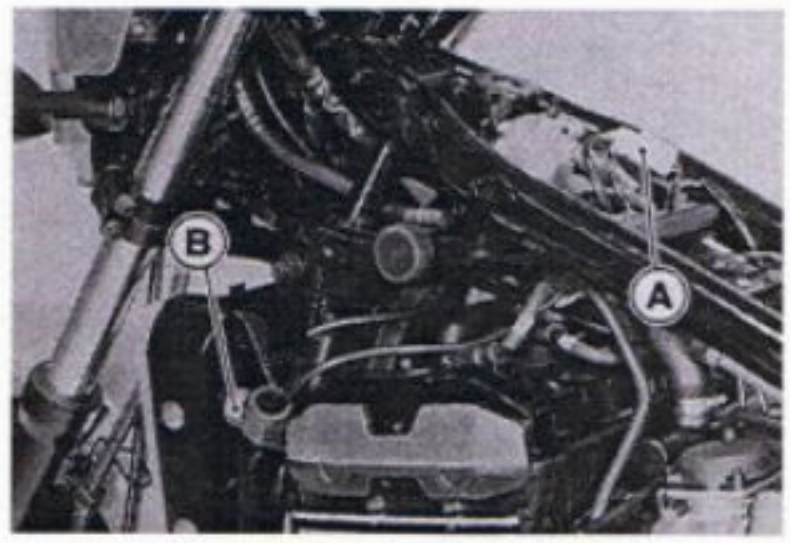

- Remove:
  Coolant (drain)
  Radiator Fan Switch Lead Connector [A]
  Radiator Fan Switch [B]

  Water Temperature Switch Lead Connector [A]
  Water Temperature Switch [B]

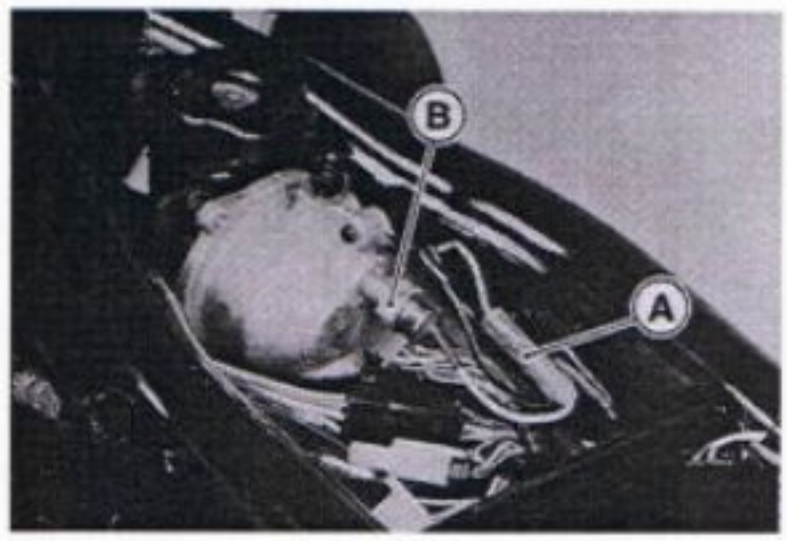

Radiator Fan Switch, Water Temperature Switch Installation

- Apply silicone sealant to the threads of the fan switch and water temperature switch.

  Sealant – Kawasaki Bond (Silicone Sealant): 59019-120

- Tighten the fan switch and water temperature switch.

  Torque – Radiator Fan Switch : 24 N-m (2.4 kg-m, 17.5 ft-lb)
  Water Temperature Switch : 7.8 N-m (0.80 kg-m, 69 ft-lb)

Radiator Fan Switch, Water Temperature Switch Inspection

- Refer to Electrical System chapter for these inspection.

Engine Top End

Table of Contents

Exploded View 4-2
Specifications 4-4
Clean Air System 4-6
Air Suction Valve Installation 4-6
Air Suction Valve Inspection 4-6
Vacuum Switch Valve Installation 4-6
Vacuum Switch Valve Test 4-6
Clean Air System Hose Inspection 4-7
Cylinder Head Cover 4-8
Removal 4-8
Installation 4-8
Camshaft Chain Tensioner 4-9
Removal 4-9
Installation 4-9
Camshaft 4-10
Camshaft Removal 4-10
Camshaft Installation 4-10
Camshaft, Camshaft Cap Wear 4-12
Camshaft Chain Removal 4-12
Camshaft Chain Wear 4-12
Camshaft and Sprocket Assembly 4-13
Rocker Shaft, Rocker Arm 4-13
Removal 4-13
Installation 4-13
Cylinder Head 4-14
Cylinder Compression Measurement 4-14
Cylinder Head Removal 4-15
Cylinder Head Installation 4-15
Cylinder Head Cleaning 4-16
Cylinder Head Warp 4-16
Valves 4-18
Valve Clearance Inspection 4-18
Valve Clearance Adjustment 4-19
Valve Removal 4-22
Valve Installation 4-22
Valve Guide Removal 4-22
Valve Guide Installation 4-22
Valve-to-Guide Clearance Measurement 4-22
Valve Seat Inspection 4-23
Valve Seat Repair 4-23
Cylinder, Pistons 4-27
Cylinder Removal 4-27
Piston Removal 4-27
Cylinder, Piston Installation 4-27
Cylinder Wear 4-29
Piston Wear 4-30
Piston/Cylinder Clearance 4-30
Piston Ring, Piston Ring Groove Wear 4-30
Piston Ring Groove Width 4-31
Piston Ring Thickness 4-31
Piston Ring End Gap 4-31
Carburetor Holder 4-32
Carburetor Holder Installation 4-32
Muffler 4-33
Removal 4-33
Installation 4-33

Exploded View

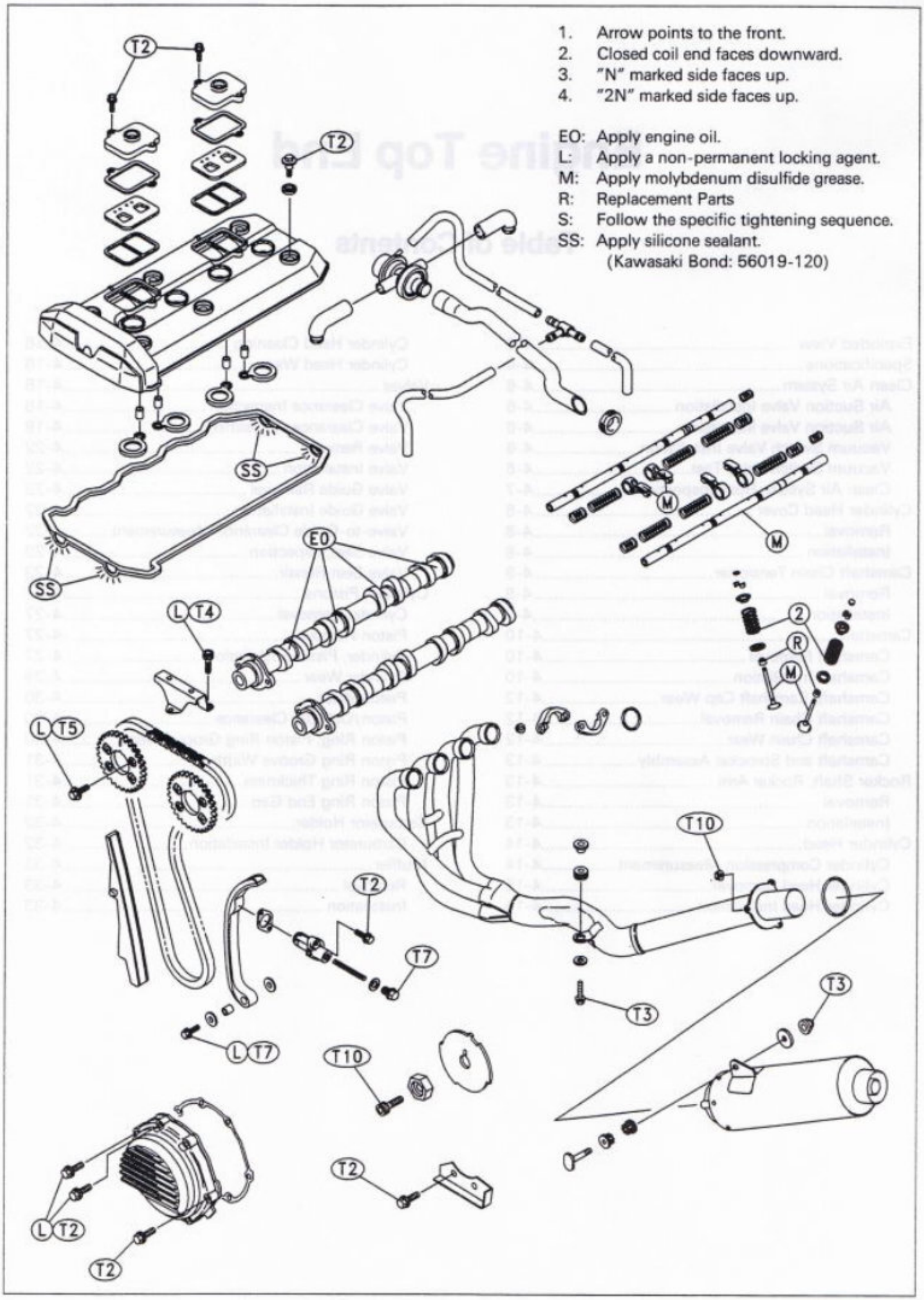

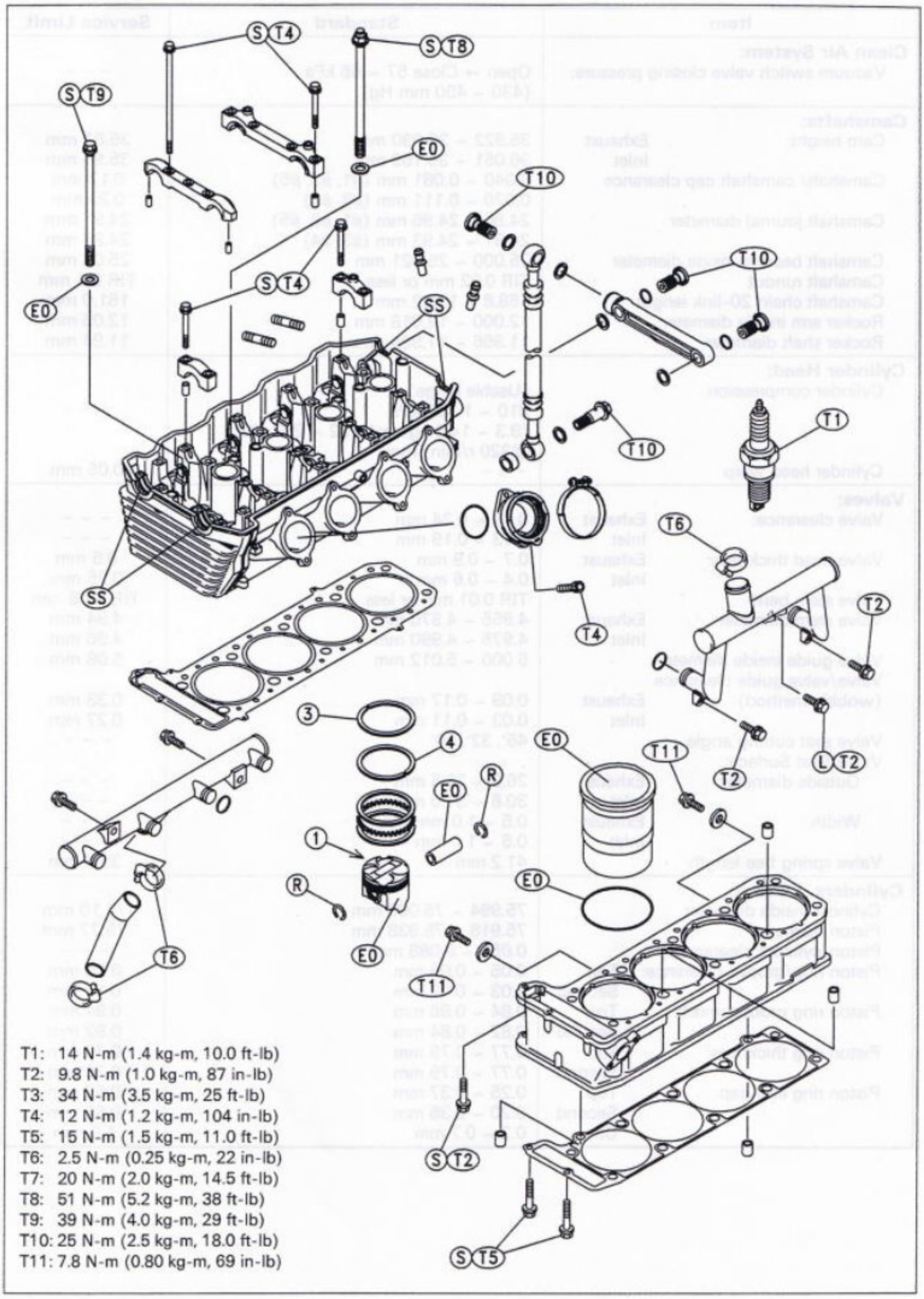

T1: 14 N-m (1.4 kg-m, 10.0 ft-lb)
T2: 9.8 N-m (1.0 kg-m, 87 in-lb)
T3: 34 N-m (3.5 kg-m, 25 ft-lb)
T4: 12 N-m (1.2 kg-m, 104 in-lb)
T5: 15 N-m (1.5 kg-m, 11.0 ft-lb)
T6: 2.5 N-m (0.25 kg-m, 22 in-lb)
T7: 20 N-m (2.0 kg-m, 14.5 ft-lb)
T8: 51 N-m (5.2 kg-m, 38 ft-lb)
T9: 39 N-m (4.0 kg-m, 29 ft-lb)
T10: 25 N-m (2.5 kg-m, 18.0 ft-lb)
T11: 7.8 N-m (0.80 kg-m, 69 in-lb)

Specifications

Item		Standard	Service Limit
Clean Air System:			
Vacuum switch valve closing pressure:		Open → Close 57 ~ 65 kPa (430 ~ 490 mm Hg)	– – –
Camshafts:			
Cam height:	Exhaust	35.922 ~ 36.030 mm	35.82 mm
	Inlet	36.051 ~ 36.159 mm	35.95 mm
Camshaft/ camshaft cap clearance		0.040 ~ 0.081 mm (#1, #2, #5)	0.17 mm
		0.070 ~ 0.111 mm (#3, #4)	0.20 mm
Camshaft journal diameter		24.94 ~ 24.96 mm (#1, #2, #5)	24.91 mm
		24.91 ~ 24.93 mm (#3, #4)	24.88 mm
Camshaft bearing inside diameter		25.000 ~ 25.021 mm	25.08 mm
Camshaft runout		TIR 0.02 mm or less	TIR 0.1 mm
Camshaft chain 20-link length		158.8 ~ 159.2 mm	161.0 mm
Rocker arm inside diameter		12.000 ~ 12.018 mm	12.05 mm
Rocker shaft diameter		11.966 ~ 11.984 mm	11.94 mm
Cylinder Head:			
Cylinder compression		(Usable range) 910 ~ 1 400 kPa (9.3 ~ 14.3 kg/cm², 132 ~ 203 psi) @320 r/min (rpm)	– – –
Cylinder head warp		– – –	0.05 mm
Valves:			
Valve clearance:	Exhaust	0.18 ~ 0.24 mm	– – –
	Inlet	0.13 ~ 0.19 mm	– – –
Valve head thickness:	Exhaust	0.7 ~ 0.9 mm	0.5 mm
	Inlet	0.4 ~ 0.6 mm	0.25 mm
Valve stem bend		TIR 0.01 mm or less	TIR 0.05 mm
Valve stem diameter:	Exhaust	4.955 ~ 4.970 mm	4.94 mm
	Inlet	4.975 ~ 4.990 mm	4.96 mm
Valve guide inside diameter		5.000 ~ 5.012 mm	5.08 mm
Valve/valve guide clearance (wobble method):	Exhaust	0.09 ~ 0.17 mm	0.33 mm
	Inlet	0.03 ~ 0.11 mm	0.27 mm
Valve seat cutting angle		45°, 32°, 60°	– – –
Valve Seat Surface:			
Outside diameter:	Exhaust	26.3 ~ 26.5 mm	– – –
	Inlet	30.8 ~ 31.0 mm	– – –
Width:	Exhaust	0.5 ~ 1.0 mm	– – –
	Inlet	0.5 ~ 1.0 mm	– – –
Valve spring free length:		41.2 mm	39.6 mm
Cylinders, Pistons:			
Cylinder inside diameter		75.994 ~ 76.006 mm	76.10 mm
Piston diameter		75.918 ~ 75.938 mm	75.77 mm
Piston/cylinder clearance		0.056 ~ 0.088 mm	– – –
Piston ring/groove clearance:	Top	0.05 ~ 0.09 mm	0.19 mm
	Second	0.03 ~ 0.07 mm	0.17 mm
Piston ring groove width:	Top	0.84 ~ 0.86 mm	0.94 mm
	Second	0.82 ~ 0.84 mm	0.92 mm
Piston ring thickness:	Top	0.77 ~ 0.79 mm	0.70 mm
	Second	0.77 ~ 0.79 mm	0.70 mm
Piston ring end gap:	Top	0.25 ~ 0.37 mm	0.67 mm
	Second	0.20 ~ 0.35 mm	0.65 mm
	Oil	0.2 ~ 0.7 mm	1.0 mm

Cam Height

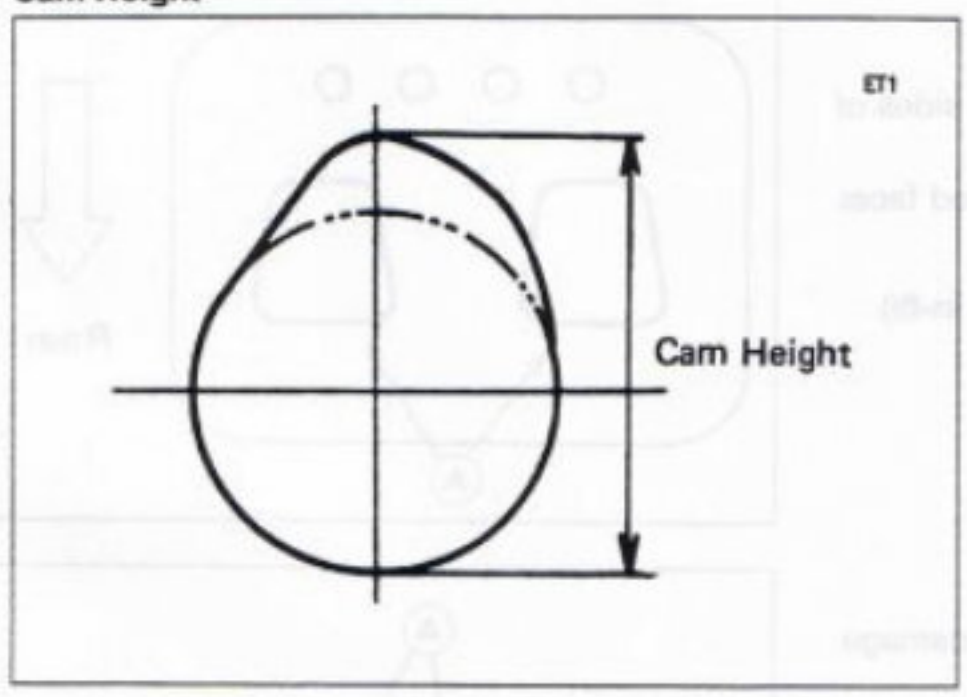

Camshaft Journals

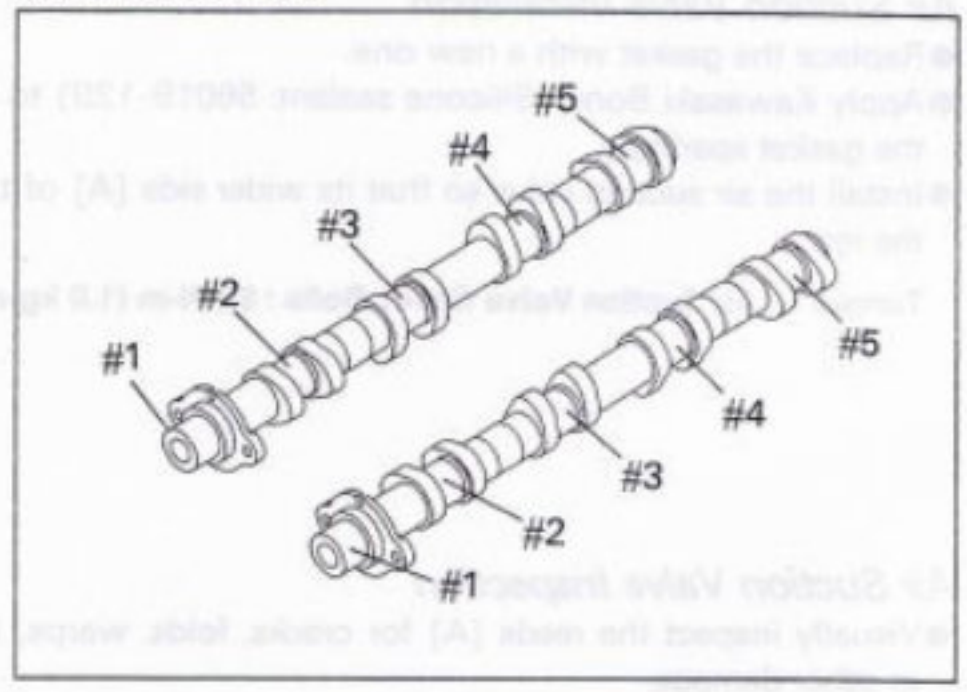

Valve Head Thickness

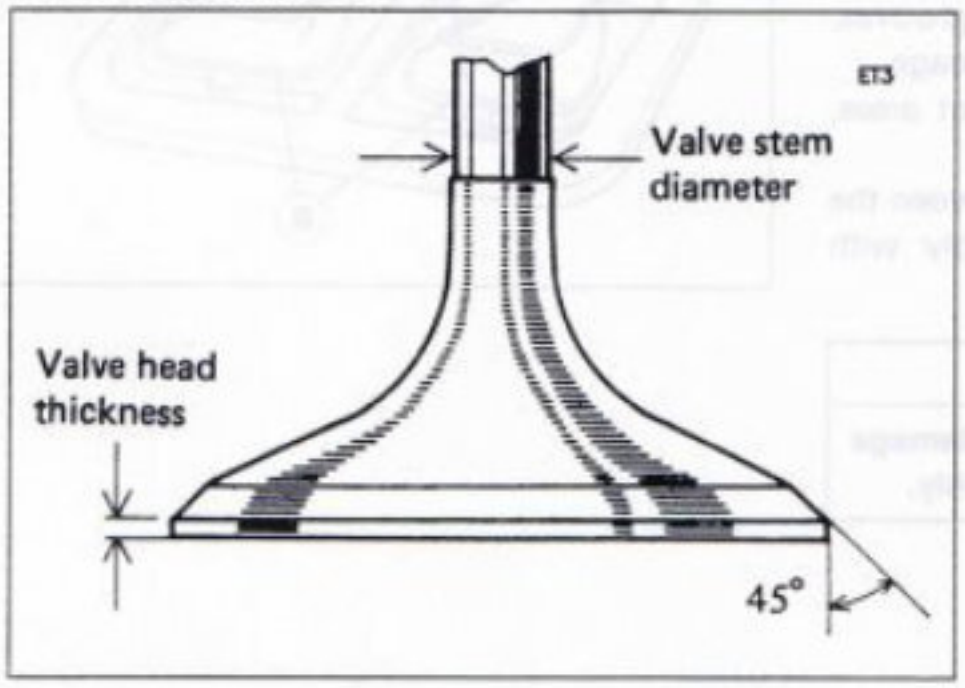

Valve Stem Bent

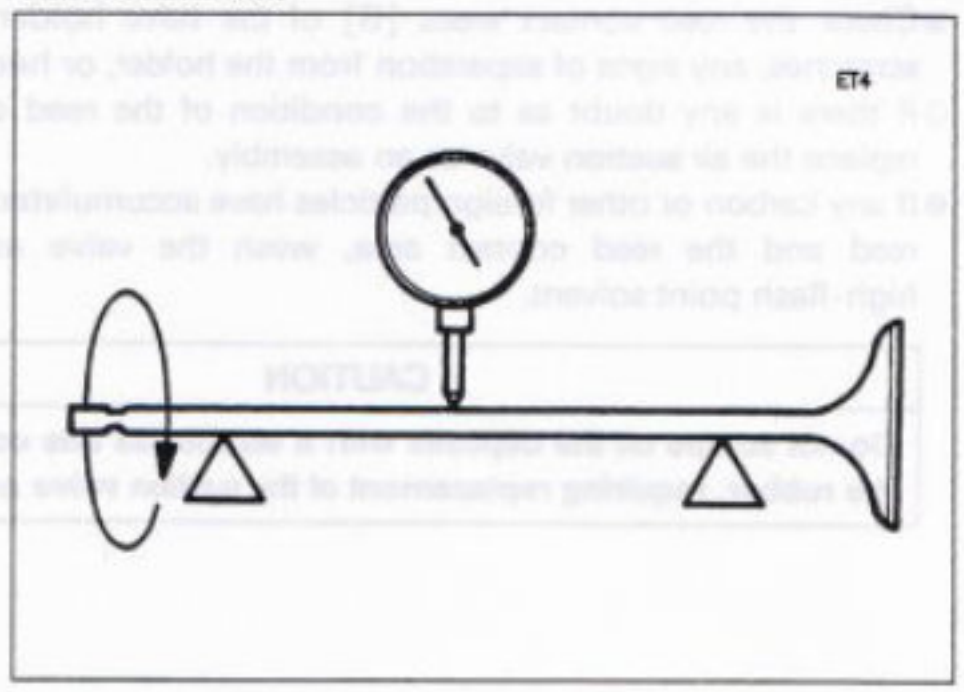

Special Tools – **Fork Oil Level Gauge: 57001-1290**
Spark Plug Wrench, Hex 16: 57001-1262
Compression Gauge: 57001-221
Compression Gauge Adapter, M10 X 1.0: 57001-1317
Valve Spring Compressor Assembly: 57001-241
Valve Spring Compressor Adapter, Φ22: 57001-1202
Valve Guide Arbor, Φ5: 57001-1203
Valve Guide Reamer, Φ5: 57001-1204
Valve Seat Cutter Holder, Φ5: 57001-1208
Valve Seat Cutter Holder Bar: 57001-1128
Valve Seat Cutter, 45° – Φ30: 57001-1187 , or
Valve Seat Cutter, 45° – Φ32: 57001-1115
Valve Seat Cutter, 32° – Φ28: 57001-1119 , or
Valve Seat Cutter, 32° – Φ30: 57001-1120
Valve Seat Cutter, 60° – Φ30: 57001-1123
Valve Seat Cutter, 45° – Φ32: 57001-1115 , or
Valve Seat Cutter, 45° – Φ35: 57001-1116
Valve Seat Cutter, 32° – Φ33: 57001-1199
Valve Seat Cutter, 60° – Φ33: 57001-1334
Piston Pin Puller Assembly: 57001-910

Sealant – **Kawasaki Bond (Silicone Sealant): 56019-120**

Clean Air System

Air Suction Valve Installation

- Replace the gasket with a new one.
- Apply Kawasaki Bond (Silicone sealant: 56019-129) to both sides of the gasket sparingly.
- Install the air suction valve so that its wider side [A] of the reed faces the rear.

Torque – Air Suction Valve Cover Bolts : 9.8 N-m (1.0 kg-m, 87 in-lb)

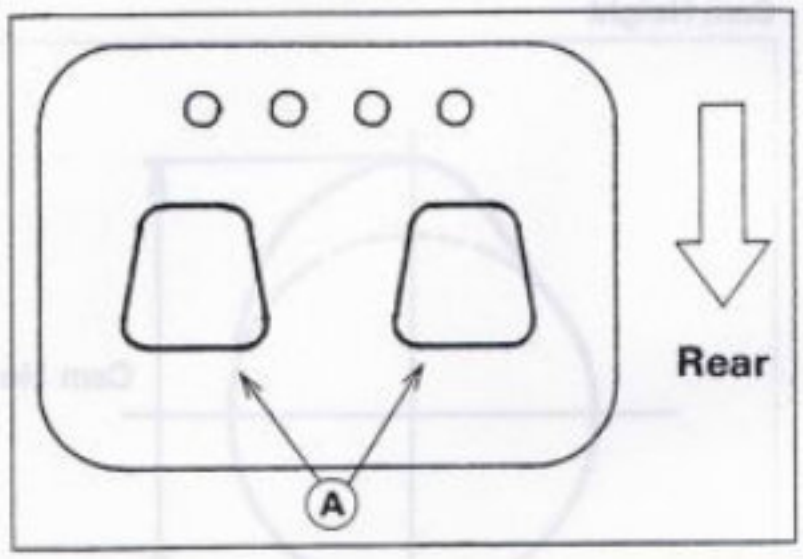

Air Suction Valve Inspection

- Visually inspect the reeds [A] for cracks, folds, warps, heat damage, or other damage.

★If there is any doubt as to the condition of the reed, replace the air suction valve as an assembly.

- Check the reed contact areas [B] of the valve holder for grooves, scratches, any signs of separation from the holder, or heat damage.

○If there is any doubt as to the condition of the reed contact areas, replace the air suction valve as an assembly.

- If any carbon or other foreign particles have accumulated between the reed and the reed contact area, wash the valve assembly with high-flash point solvent.

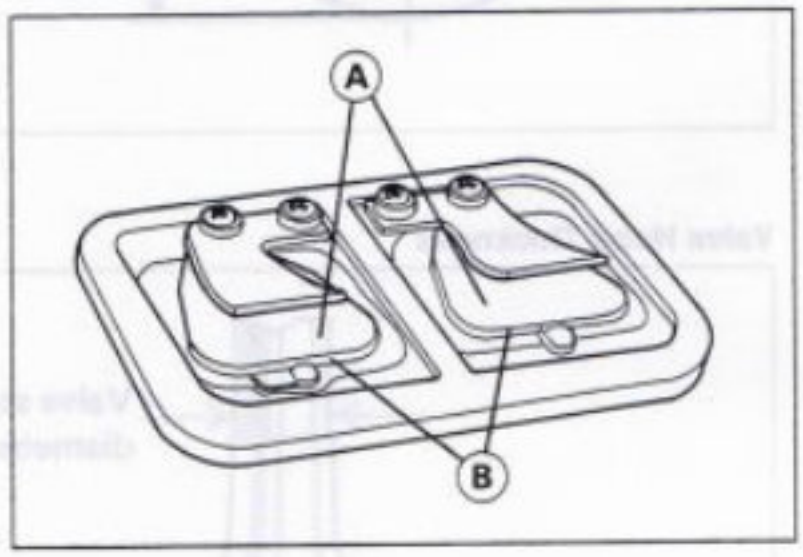

CAUTION
Do not scrape off the deposits with a scraper as this could damage the rubber, requiring replacement of the suction valve assembly.

Vacuum Switch Valve Installation

- Install the vacuum switch valve so that the air hole [A] faces downwards.
- Route the hoses correctly(see General Information chapter).

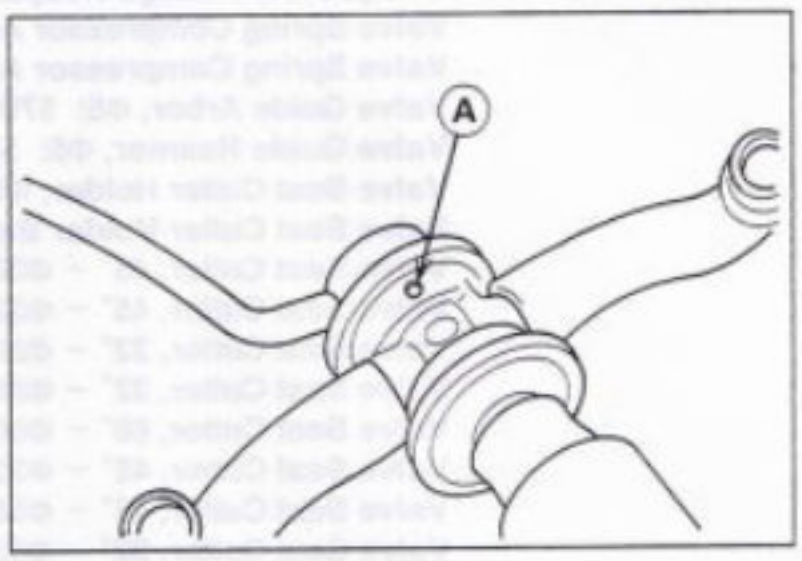

Vacuum Switch Valve Test

- Remove the fuel tank (see Fuel System chapter).
- Remove the vacuum switch valve.
- Connect a suitable vacuum gauge [A] and syringe [B] (or fork oil level gauge) to the vacuum hoses as shown.

Special Tool – Fork Oil Level Gauge: 57001-1290

Air Flow [C]

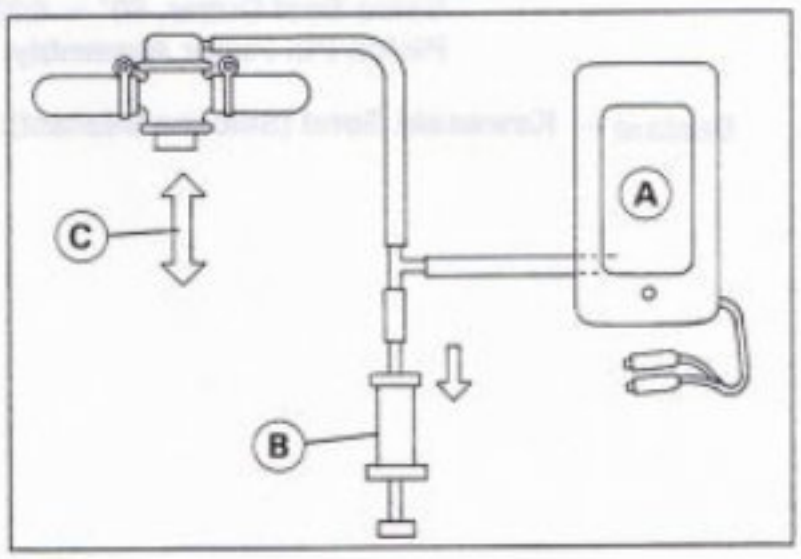

- Gradually raise the vacuum (lower the pressure) applied to the vacuum switch valve, and check the valve operation. When the vacuum is low, the vacuum switch valve should permit air to flow. When the vacuum raises to 57 ~ 65kPa (430 ~ 490 mm Hg), it should stop air flow.

★If the vacuum switch valve does not operate as described, replace it with a new one.

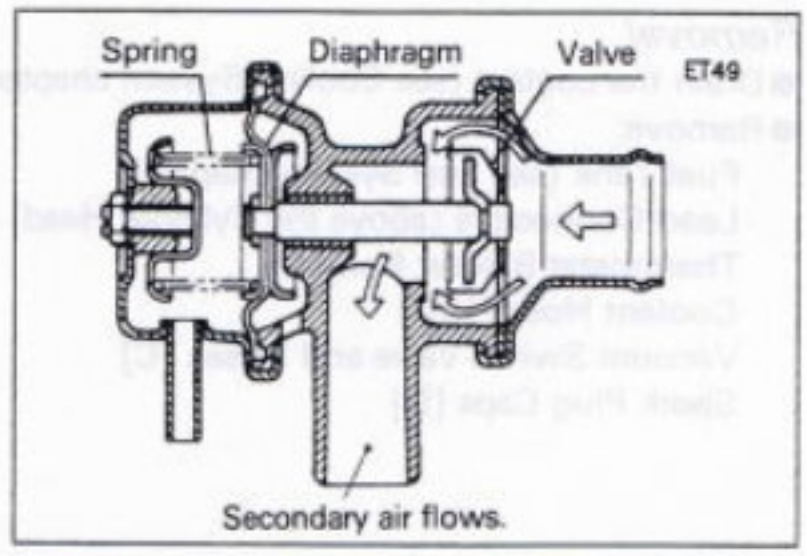

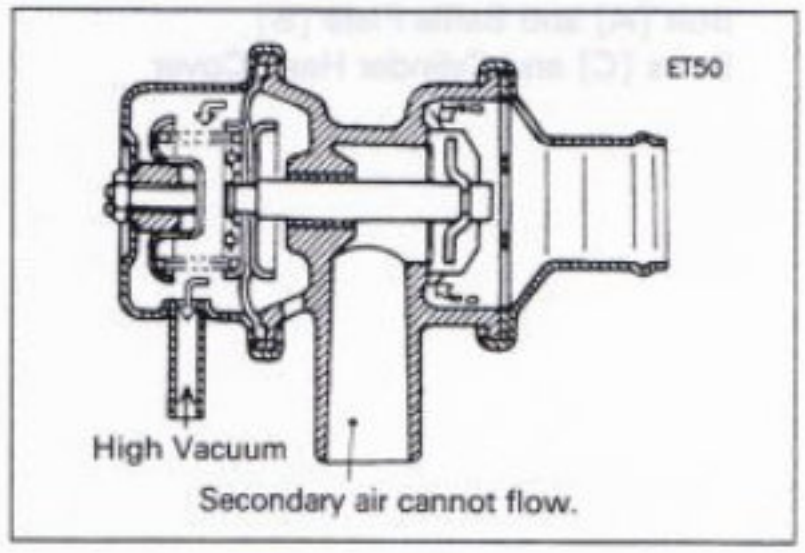

NOTE

○*To check air flow through the vacuum switch valve, just blow through the air cleaner hose.*

Vacuum Switch Valve Closing Pressure (Open → Close)

Standard: 57 ~ 65 kPa (430 ~ 490 mmHg)

Clean Air System Hose Inspection

- Be certain that all the hoses are routed without being flattened or kinked, and are connected correctly to the air cleaner housing, vacuum switch valve, #1 and #4 carburetors and air suction valve covers.

★If they are not, correct them. Replace them if they are damaged.

Cylinder Head Cover

Removal

- Drain the coolant (see Cooling System chapter)
- Remove:
  Fuel Tank (see Fuel System chapter)
  Lead Connectors (above the Cylinder Head)
  Thermostat Bracket Bolt [A]
  Coolant Hoses [B]
  Vacuum Switch Valve and Hoses [C]
  Spark Plug Caps [D]

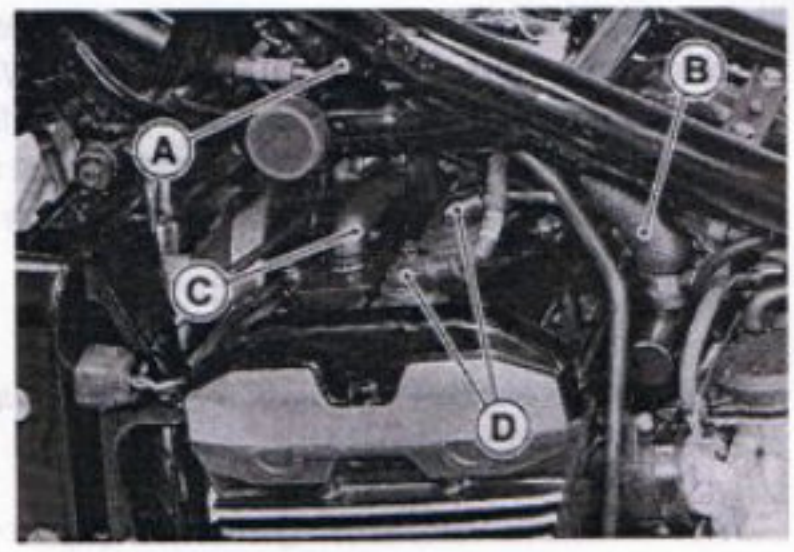

Bolt [A] and Baffle Plate [B]
Bolts [C] and Cylinder Head Cover

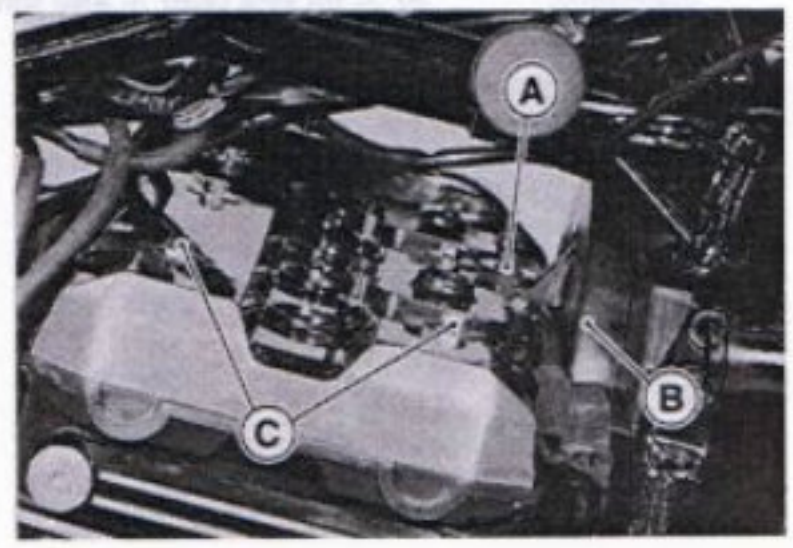

Installation

- Visually inspect the head cover gasket. If damaged, replace the head cover gasket with a new one.
- Apply silicone sealant [A] to the cylinder head as shown.

Sealant – Kawasaki Bond (Silicone Sealant): 56019-120

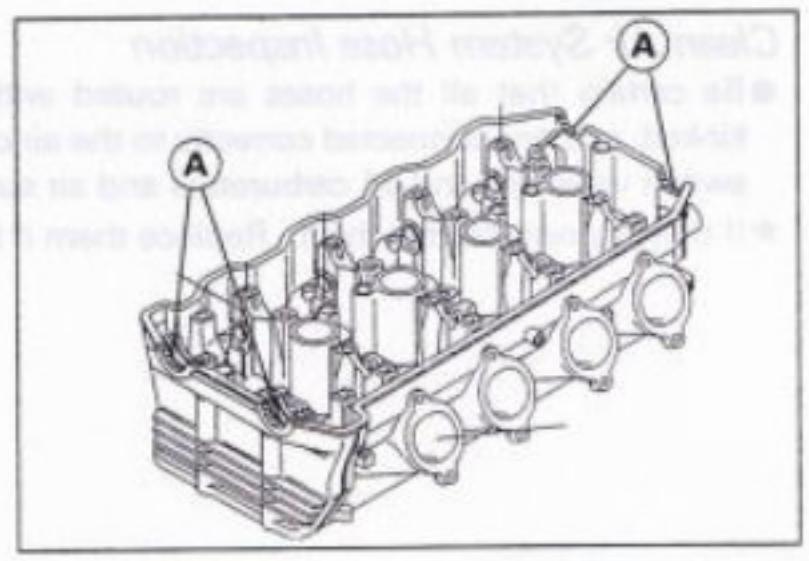

- Install:
  Dowel Pins [A]
  Plug Hole Gaskets [B]
- Tighten the head cover bolts.

Torque – Cylinder Head Cover Bolts: 9.8 N-m (1.0 kg-m, 87 in-lb)

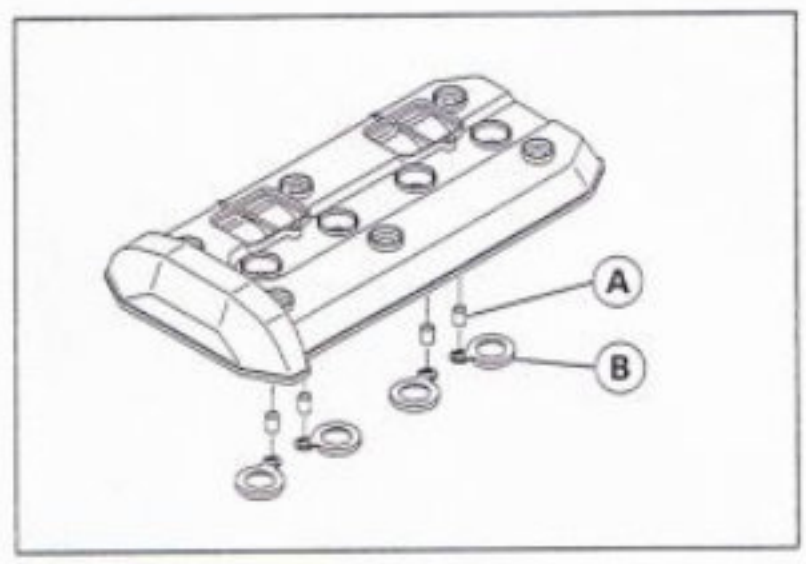

Camshaft Chain Tensioner

Removal

CAUTION

This is a non-return type cam chain tensioner. The push rod does not return to its original position once it moves out to take up camshaft chain slack. Observe all the rules listed below:
When removing the tensioner, do not take out the mounting bolts only halfway. Retightening the mounting bolts from this position could damage the tensioner and the camshaft chain. Once the bolts are loosened, the tensioner must be removed and reset as described in "Camshaft Chain Tensioner Installation."
Do not turn over the crankshaft while the tensioner is removed. This could upset the cam chain timing, and damage the valves.

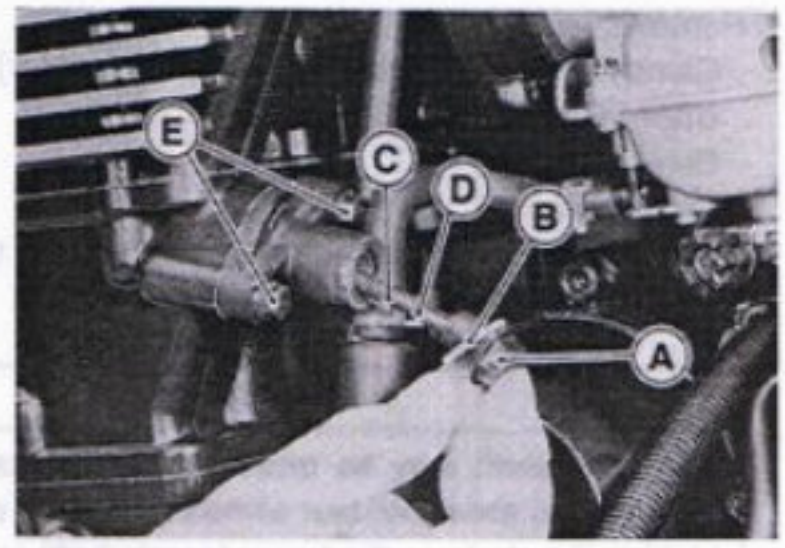

- Remove:
  Chain Tensioner Cap [A]
  Washer [B]
  Spring [C] and Pin [D]
  Tensioner Mounting Bolts [E]
  Camshaft Chain Tensioner

Installation

- Push the stopper [A] to release the ratchet and push the push rod [B] into the tensioner body.

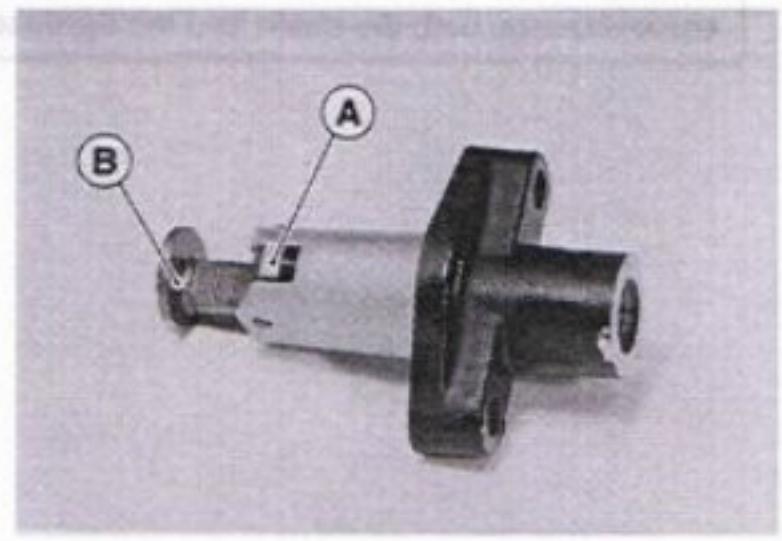

- Install the tensioner body [A] with the arrow [B] on it pointing upwards.
- Tighten the tensioner mounting bolts [C].

  Torque – Chain Tensioner Mounting Bolts: 9.8 N-m (1.0 kg-m, 87 in-lb)

- Install the pin, spring, and washer.
- Tighten the tensioner cap [D].

  Torque – Chain Tensioner Cap : 20 N-m (20 kg-m, 14.5 in-lb)

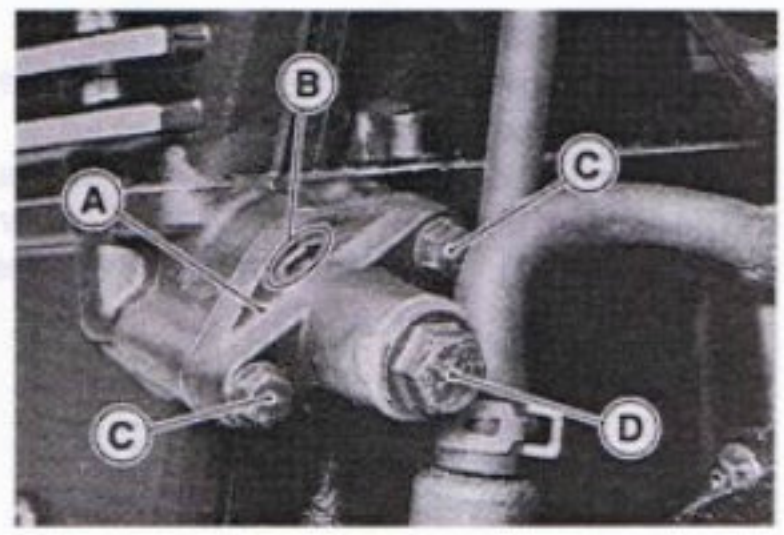

Camshaft

Camshaft Removal

- Remove:
  Cylinder Head Cover (see this chapter)
  Pickup Coil Cover
- Position the crankshaft at #1, 4 piston TDC.
  TDC Mark [A] for #1, 4 Pistons
  Crankcase Mark [B]

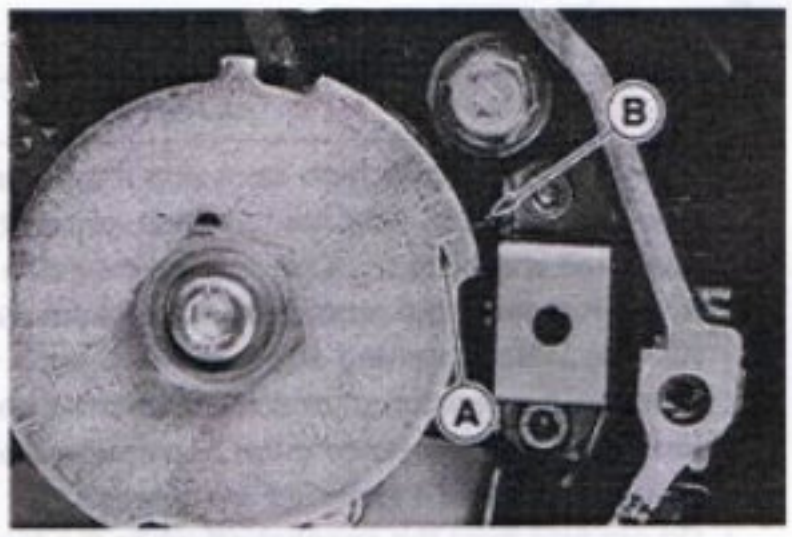

- Remove:
  Camshaft Chain Tensioner (see this chapter)
  Upper Chain Guide [A]
  Camshaft Caps [B]
  Camshafts [C]
- Stuff a clean cloth into the chain tunnel to keep any parts from dropping into the crankcase.

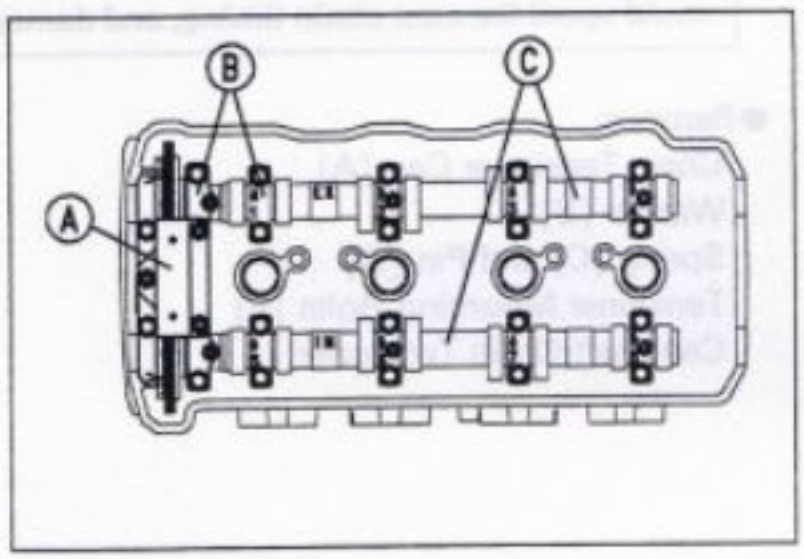

CAUTION

The crankshaft may be turned while the camshafts are removed. Always pull the chain taut while turning the crankshaft. This avoids kinking the chain on the lower (crankshaft) sprocket. A kinked chain could damage both the chain and the sprocket.

Camshaft Installation

- If a new camshaft is to be used, apply a thin coat of molybdenum disulfide grease to the cam surfaces.
- Apply engine oil to all cam parts and journals.
- ○ The exhaust camshaft has an EX mark [A] and the inlet camshaft has an IN mark[B]. Be careful not to mix up these shafts.

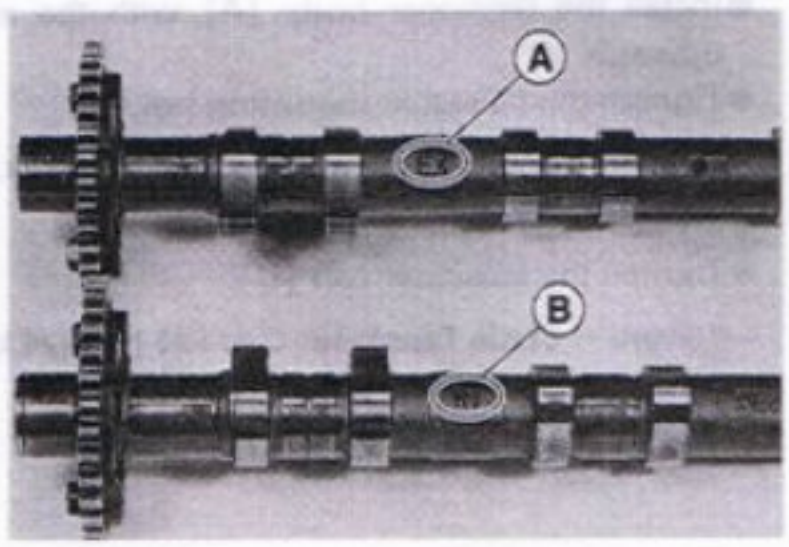

- Position the crankshaft at #1 and #4 piston TDC.
  TDC Mark [A] for #1 and #4 Pistons
  Crankcase Mark [B]

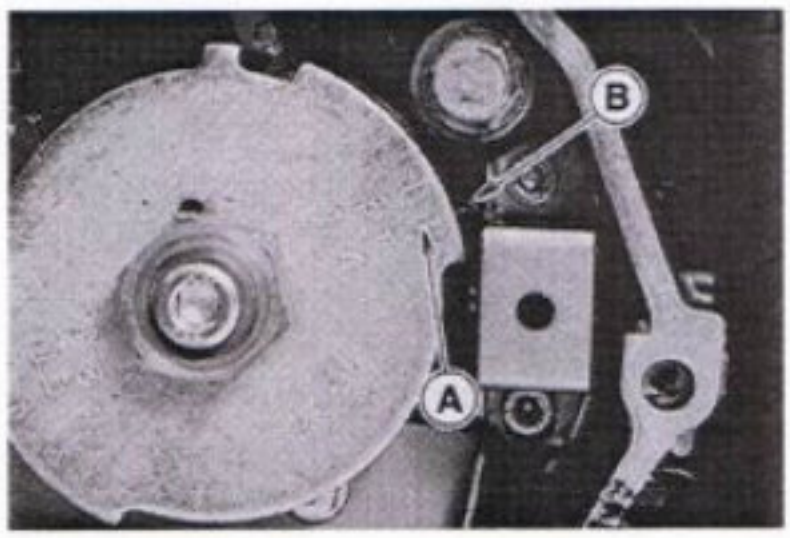

CAUTION

The crankshaft may be turned while the camshafts are removed, but always pull the chain taut while turning the crankshaft. This avoids kinking the chain on the lower (crankshaft) sprocket. A kinked chain could damage both the chain and the sprocket.

- Install the camshafts in the order listed.
  Exhaust Camshaft and Caps (time the camshaft)
  Inlet Camshaft and Caps (time the camshaft)
  - Pull the tension side (exhaust side) of the chain taut to install the chain.
  - Engage the camshaft chain with the camshaft sprockets so that the timing marks on the sprockets are positioned as shown.
  - The timing marks must be aligned with the cylinder head upper surface and positioned respectively as shown after the camshaft chain slack is taken up by the tensioner.

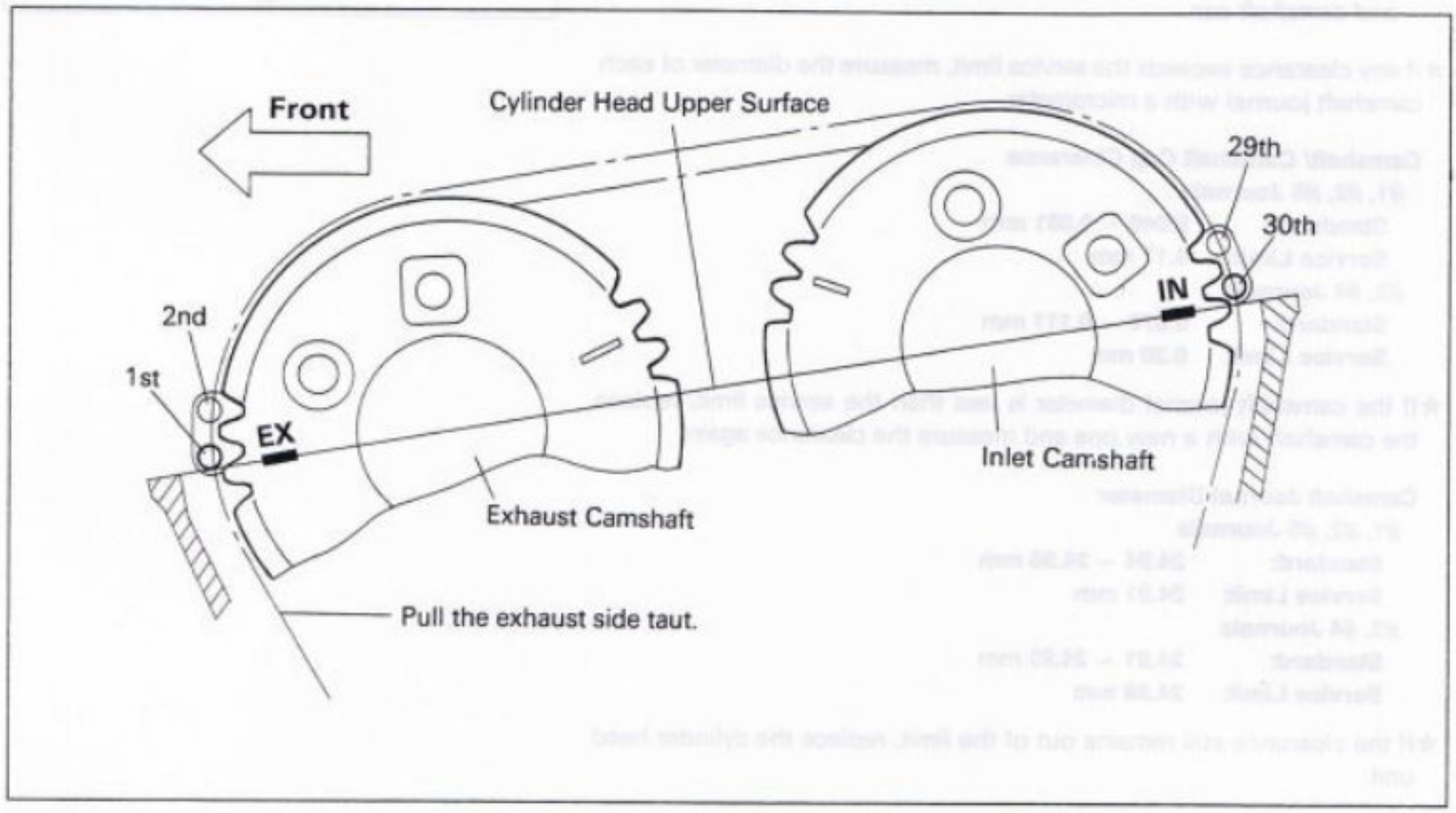

- Install the camshaft caps in the correct positions shown.
  - The camshaft cap locations are numbered and the arrow mark must face forward.

CAUTION
The camshaft caps are machined with the cylinder head. So, if a cap is installed in a wrong location, the camshaft may seize because of improper oil clearance in the bearings.

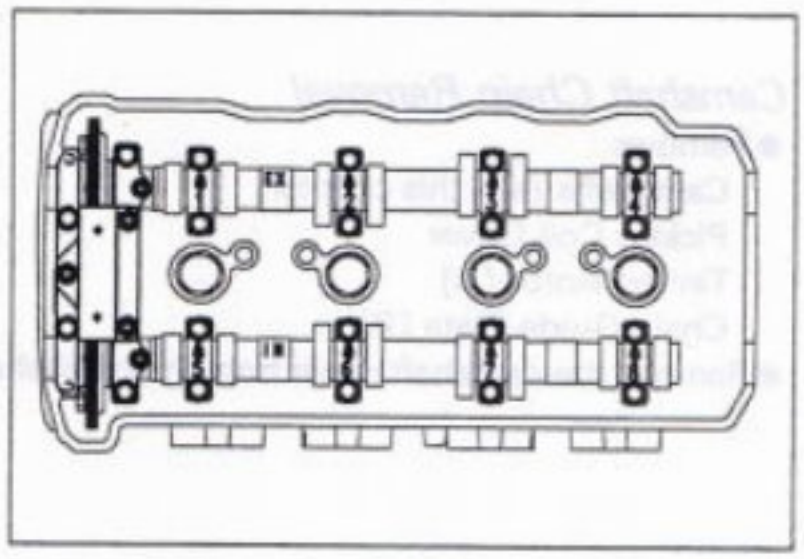

- Tighten the camshaft cap bolts in the order shown.

  Torque – Camshaft Cap Bolts : 12 N-m (1.2 kg-m, 104 in-lb)

- Tighten the upper chain guide bolts [A].

  Non-permanent Locking Agent – Upper Chain Guide Bolts
  Torque – Upper Chain Guide Bolts: 12 N-m (1.2 kg-m, 104 in-lb)

- Install:
  Camshaft Chain Tensioner (see this chapter)
  Pickup Coil Cover (see Pickup Coil Installation in Electrical System chapter).
- Check the chain timing.

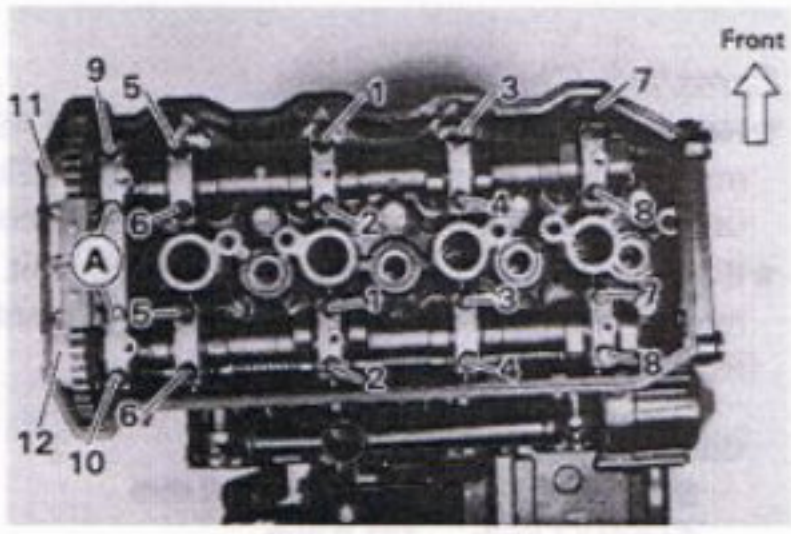

Camshaft/ Camshaft Cap Wear

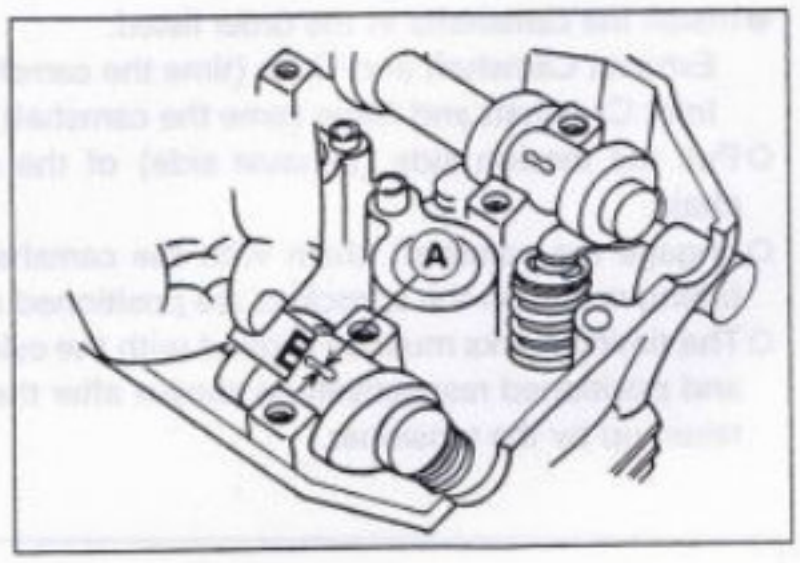

- Cut strips of plastigage to journal width. Place a strip on each journal parallel to the camshaft installed in the correct position.
- Measure each clearance between the camshaft and the camshaft cap using plastigage(press gauge) [A].
- ○ Tighten the camshaft cap bolts to the specified torque.

Torque – Camshaft Cap Bolts: 12N-m(1.2 kg-m, 104 in-lb)

NOTE

○ *Do not turn the camshaft when the plastigage is between the journal and camshaft cap.*

★ If any clearance exceeds the service limit, measure the diameter of each camshaft journal with a micrometer.

Camshaft/ Camshaft Cap Clearance
#1, #2, #5 Journals
Standard: 0.040 ~ 0.081 mm
Service Limit: 0.17 mm
#3, #4 Journals
Standard: 0.070 ~ 0.111 mm
Service Limit: 0.20 mm

★ If the camshaft journal diameter is less than the service limit, replace the camshaft with a new one and measure the clearance again.

Camshaft Journal Diameter
#1, #2, #5 Journals
Standard: 24.94 ~ 24.96 mm
Service Limit: 24.91 mm
#3, #4 Journals
Standard: 24.91 ~ 24.93 mm
Service Limit: 24.88 mm

★ If the clearance still remains out of the limit, replace the cylinder head unit.

Camshaft Chain Removal

- Remove:
  Camshafts (see this chapter)
  Pickup Coil Cover
  Timing Rotor [A]
  Chain Guide Plate [B]
- Remove the camshaft chain from the crankshaft sprocket.

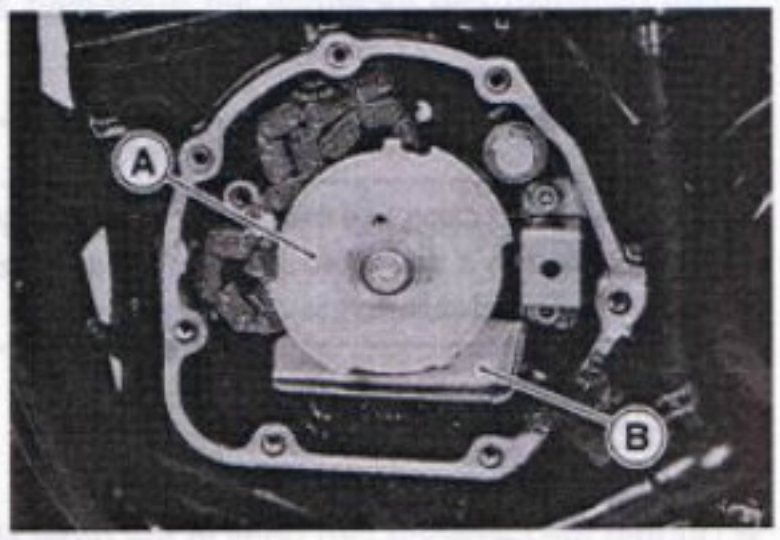

Camshaft Chain Wear

- Hold the chain taut with a force of about 49N (5 kg, 11lb) in some manner, and measure a 20-link length. Since the chain may wear unevenly, take measurements at several places.

★ If any measurement exceeds the service limit, replace the chain. Also, replace the camshaft sprockets and the crankshaft when the chain is replaced.

Camshaft Chain 20-link Length
Standard: 158.8 ~ 159.2 mm
Service Limit: 161.0 mm

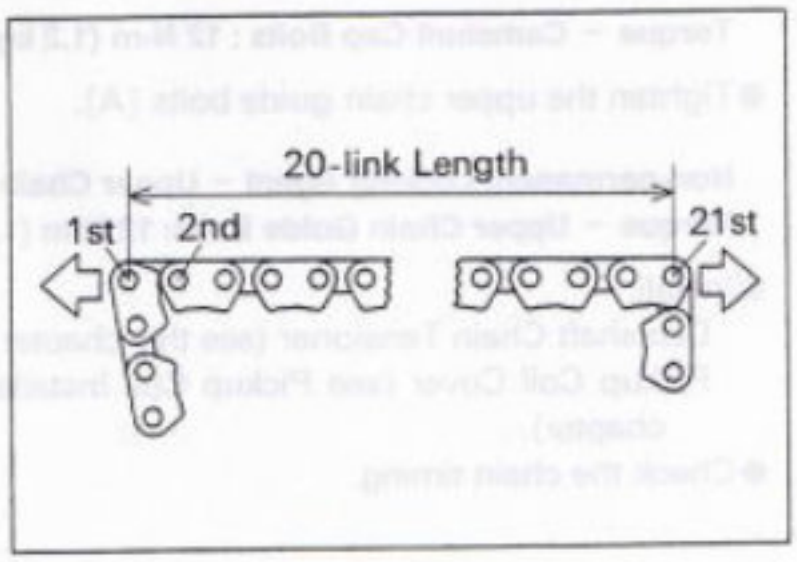

Camshaft and Sprocket Assembly

- Since the inlet and exhaust camshaft sprockets are the same, they have a set of bolt holes for the exhaust camshaft and another for the intake. Install the sprockets as shown in the Camshaft Chain Timing illustration.
  Bolt Holes for the Inlet Camshaft [A]
  Bolt Holes for the Exhaust Camshaft [B]
- Install the sprockets so that the marked side faces ourwards.
- Apply a non-permanent locking agent to the camshaft sprocket bolts and tighten them.

Torque – Camshaft Sprocket Bolts: 15 N-m (1.5 kg-m, 11.0 ft-lb)

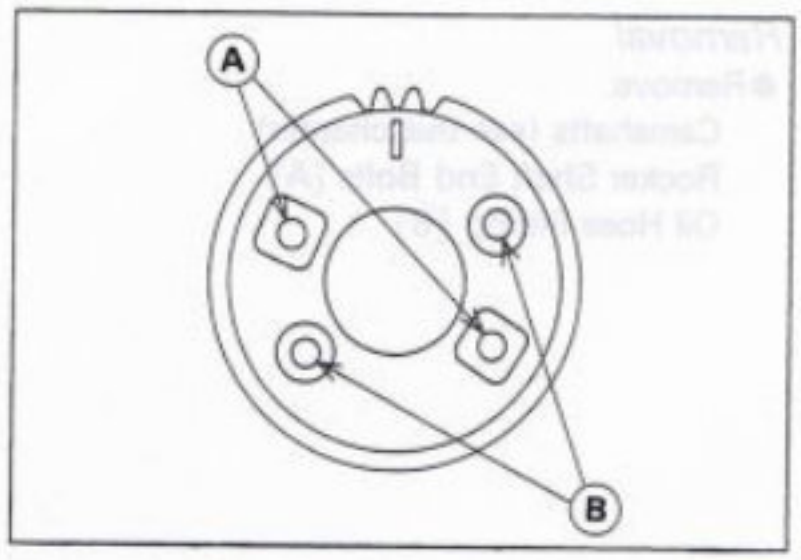

Rocker Shaft, Rocker Arm

Removal

- Remove:
  Camshafts (see this chapter)
  Rocker Shaft End Bolts [A]
  Oil Hose Fitting [B]

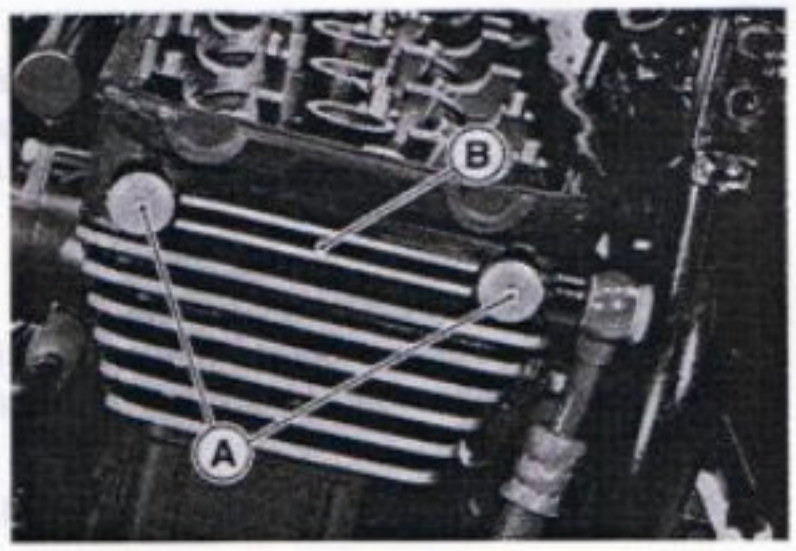

- Using a suitable bolt (M8 P1.25 × more than 20 mm long) [A], pull the rocker shaft [B] out.
  - The rocker arms and springs come off with the rocker shaft.
  - Mark and record the rocker arm locations so that the rocker arm can be reinstalled in their original positions.

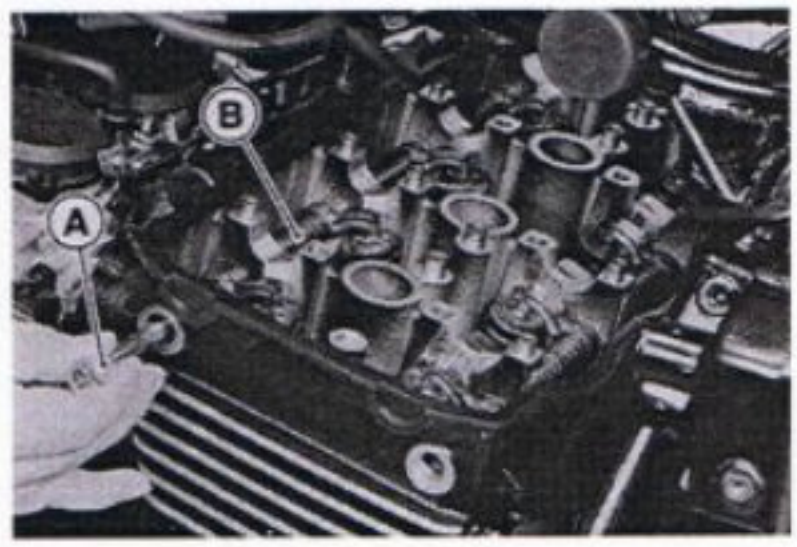

Installation

- Apply engine oil to all rocker arms and the rocker shafts.
  - The inlet rocker shaft [A] has a blue paint mark [B] and the exhaust rocker shaft [C] a red paint mark [D]. Be careful not to mix up the inlet and exhaust rocker shafts.
- Install the rocker shaft from the right side of the cylinder head so that the non-threaded end [E] goes in first.
- Install the rocker arms [F] in their original positions.
- Install the spring as shown.
- Push the rocker shaft all the way in.
- Tighten:

Torque – Rocker Shaft End Bolts : 25 N-m (2.5 kg-m, 18.0 ft-lb)

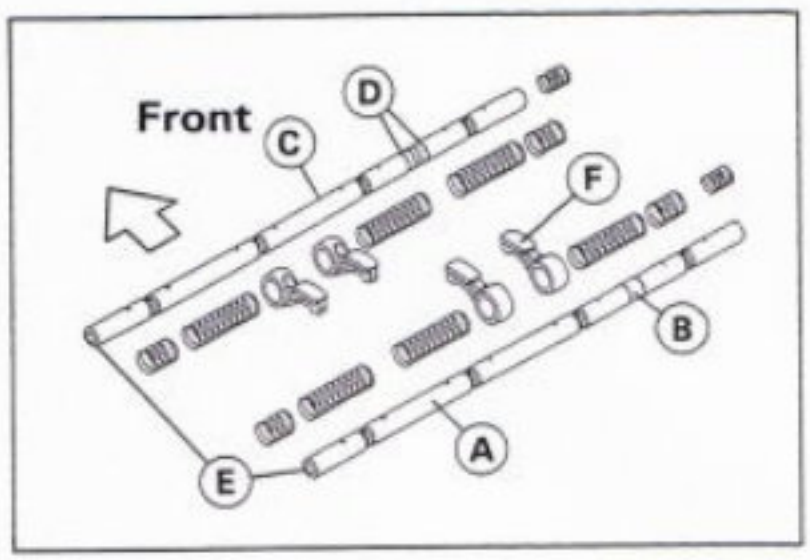

Cylinder Head

Cylinder Compression Measurement

NOTE

○ *Use the battery which is fully charged*

- Warm up the engine thoroughly.
- Stop the engine.
- Remove:
  Fuel Tank (see Fuel System chapter)
  Spark Plugs

Special Tool – Spark Plug Wrench, Hex 16: 57001-1262

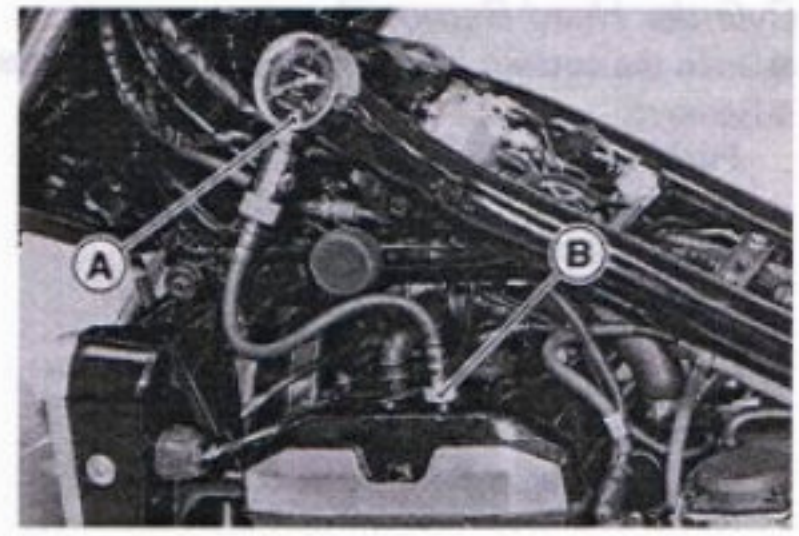

- Attach the compression gauge [A] and adapter [B] firmly into the spark plug hole.
- Using the starter motor, turn the engine over with the throttle fully open until the compression gauge stops rising; the compression is the highest reading obtainable.

Special Tools – Compression Gauge: 57001-221
Compression Gauge Adapter, M10 X 1.0: 57001-1317

Cylinder Compression
Usable Range : 910 ~ 1400 kPa (9.3 ~ 14.3 kg/cm², 132 ~ 203 psi) @ 320 r/min (rpm)

- Repeat the measurement for the other cylinders.
- Install the spark plugs.

Torque – Spark Plugs : 14 N-m (1.4 kg-m, 10.0 ft-lb)

The following table should be consulted if the obtainable compression reading is not within the usable range.

Problem	Diagnosis	Remedy (Action)
Cylinder compression is higher than usable range	Carbon accumulation on piston and in combustion chamber possibly due to damaged valve stem oil seal and/or damaged piston oil rings (This may be indicated by white exhaust smoke).	Remove the carbon deposits and replace damaged parts if necessary.
	Incorrect cylinder head gasket thickness.	Replace the gasket with a standard part.
Cylinder compression is lower than usable range	Gas leakage around cylinder head	Replace damaged gasket and check cylinder head warp.
	Bad condition of valve seating	Repair if necessary.
	Incorrect valve clearance.	Adjust the valve clearance.
	Incorrect piston/cylinder clearance	Replace the piston and/or cylinder
	Piston seizure.	Inspect the cylinder (and liner) and replace/repair the cylinder and/or piston as necessary.
	Bad condition of piston ring and/or piston ring grooves	Replace the piston and/or the piston rings.

Cylinder Head Removal

- Drain the coolant (see Cooling System chapter).
- Remove:
  Fuel Tank (see Fuel System chapter)
  Radiator (see Cooling System chapter)
  Muffler (see this chapter)
  Carburetors (see Fuel System chapter)
  Cylinder Head Cover (see this chapter)
  Camshaft Chain Tensioner
  Camshafts (see this chapter)
  Oil Hose Banjo Bolt [A] and Oil Hose [B]

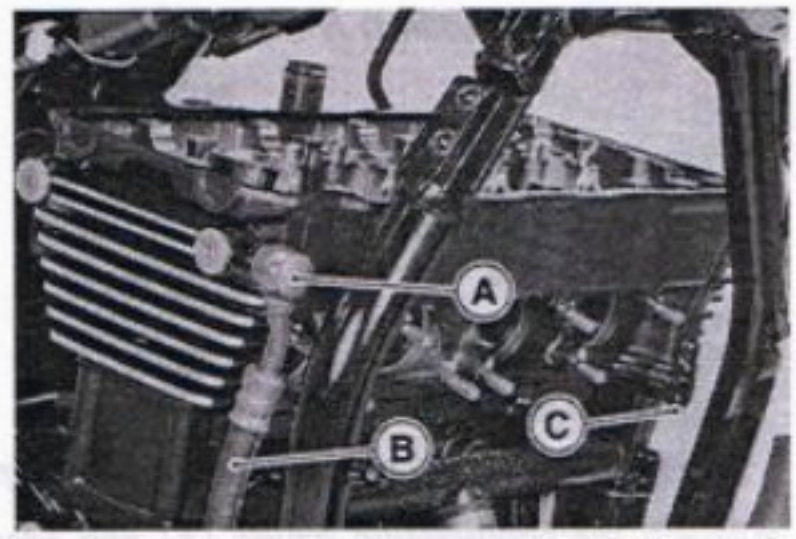

NOTE

○ *Remove the cylinder head bolt (6 mm) [C] first, then remove the cylinder head bolts. This prevents excessive stress on the small bolts.*

- Remove the cylinder head bolts.

- Tap lightly up the cylinder head with a plastic mallet [A] to separate from the cylinder.
- Remove the cylinder head gasket.

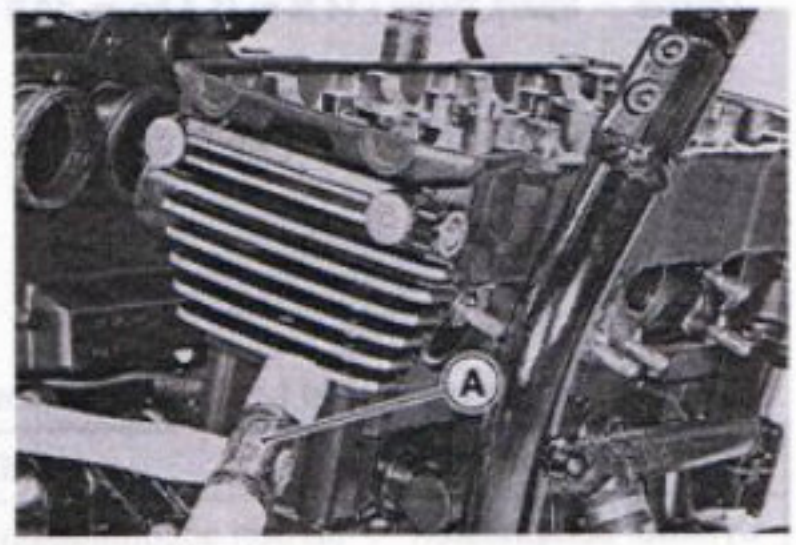

Cylinder Head Installation

- Install:
  Dowel Pins [A]
  New Cylinder Head Gasket [B]

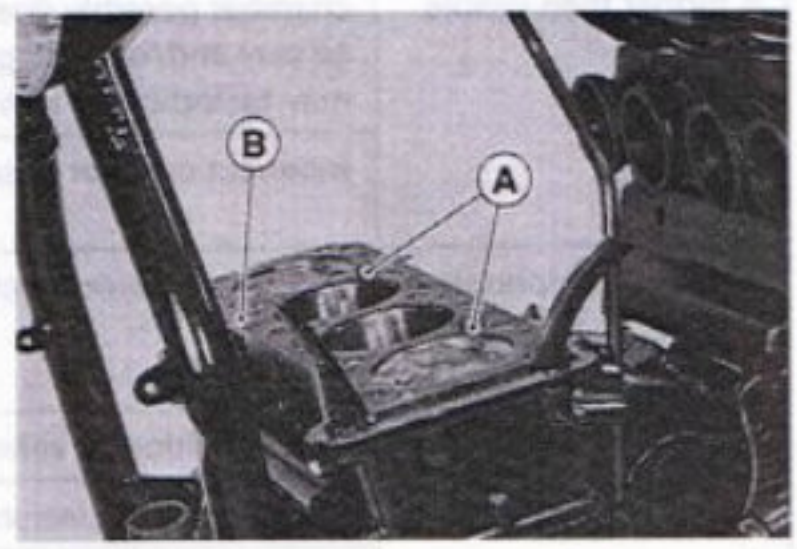

NOTE

○ *The camshaft caps are machined with the cylinder head so if a new cylinder head is installed, use the caps that are supplied with the new head.*

- Install the cylinder head on the cylinder.

- Apply engine oil [A] to both sides of the cylinder head bolt washers [B].

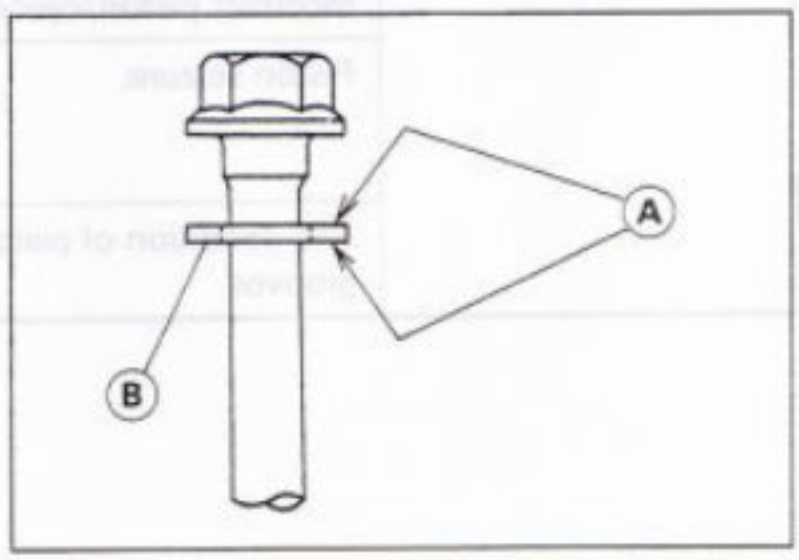

- Install the cylinder head bolts as shown.
  10 mm Bolts [A]
  11 mm Bolts [B]

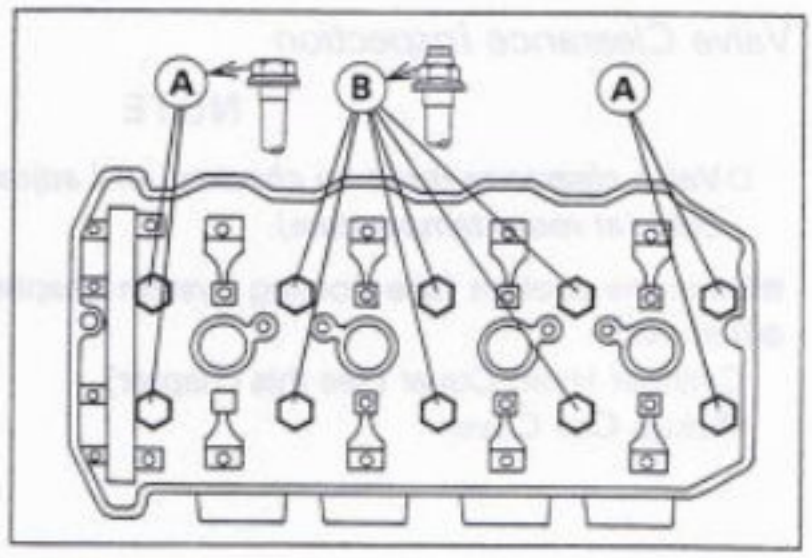

- Tighten the cylinder head bolts (11, 10mm), following the tightening sequence.

Torque – Cylinder Head Bolts:

First	**20 N-m (2.0 kg-m, 14.5 ft-lb)**
Final	**11 mm: 51 N-m (5.2 kg-m, 38 ft-lb)**
	10 mm: 39 N-m (4.0 kg-m, 29 ft-lb)

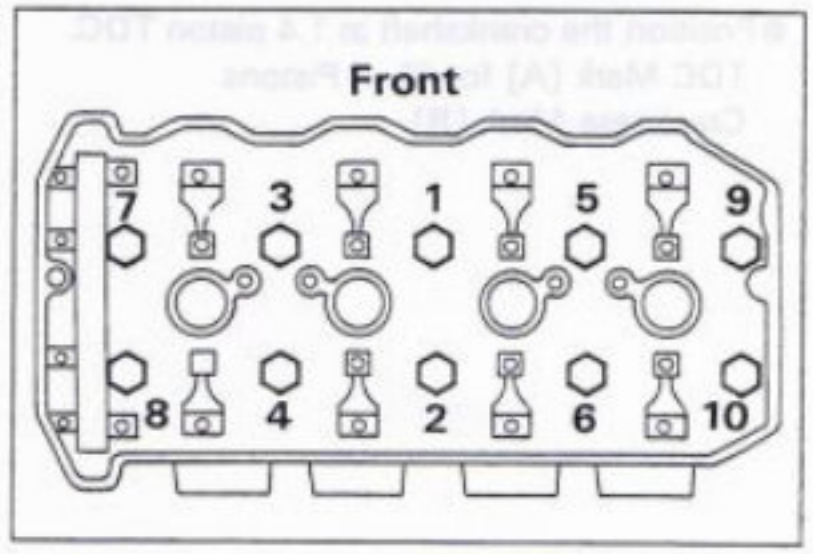

- Tighten:

Torque – Cylinder Head Bolt (6 mm): 9.8 N-m (1.0 kg-m, 87 in-lb)
Oil Hose Banjo Bolt: 25 N-m (2.5 kg-m, 18.0 ft-lb)

Valves

Valve Clearance Inspection

NOTE

○ *Valve clearance must be checked and adjusted when the engine is cold (at room temperature).*

- Drain the coolant (see Cooling System chapter).
- Remove:
  Cylinder Head Cover (see this chapter)
  Pickup Coil Cover

- Position the crankshaft at 1,4 piston TDC.
  TDC Mark [A] for #1, 4 Pistons
  Crankcase Mark [B]

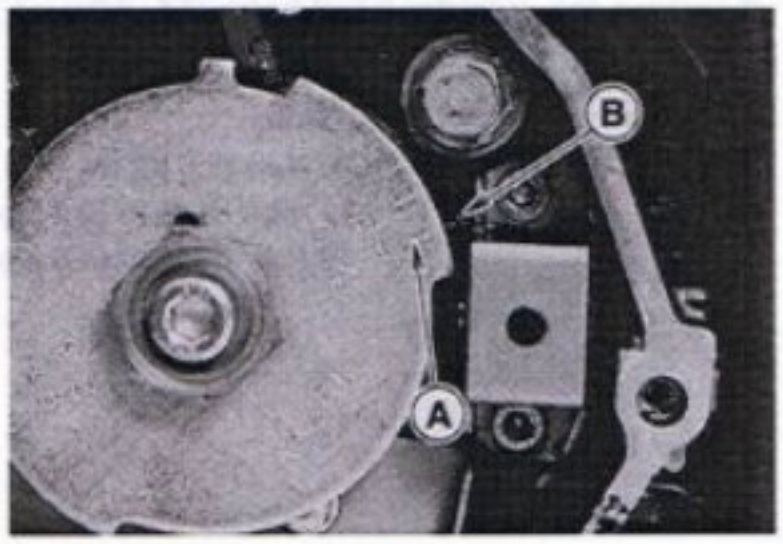

- Using a thickness gauge [A], measure the valve clearance between the rocker arm and the shim.

Valve Clearance
Standard: **Exhaust: 0.18 ~ 0.24 mm**
Inlet: 0.13 ~ 0.19 mm

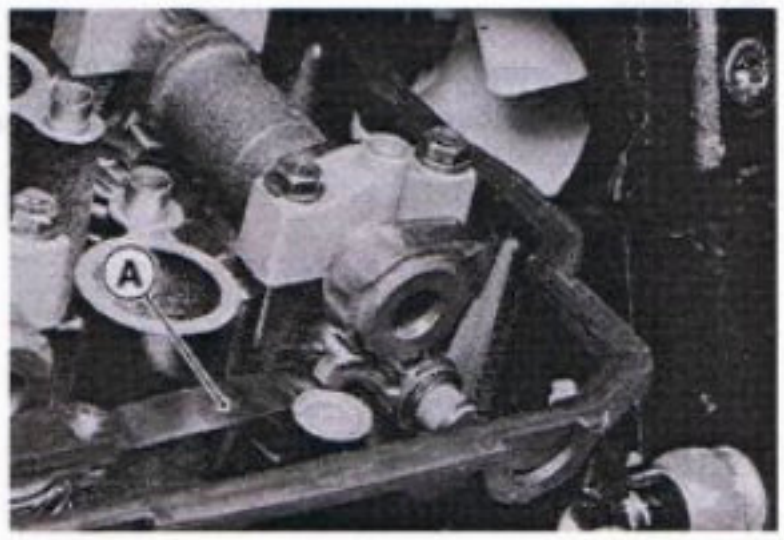

○ **When positioning #4 piston TDC at the end of the compression stroke:**
Exhaust valve clearance of #3 and #4 cylinders
Inlet valve clearance of #2 and #4 cylinders

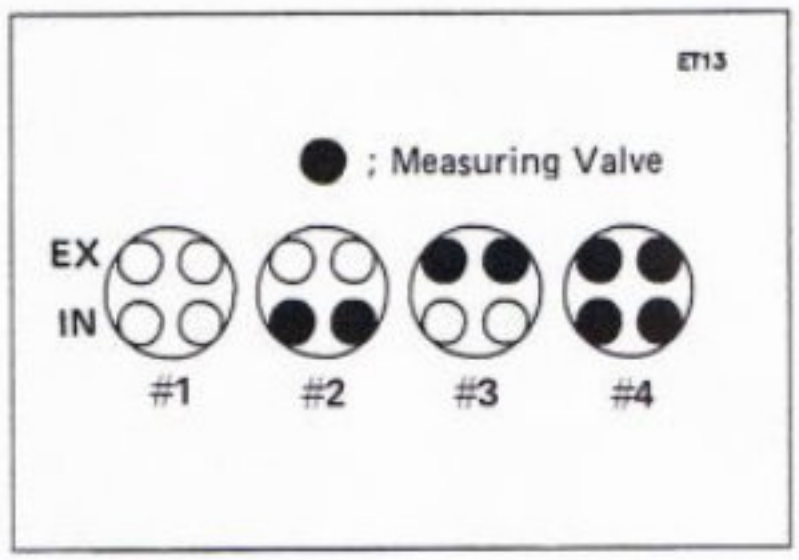

○ **When positioning #1 piston TDC at the end of the compression stroke:**
Exhaust valve clearance of #1 and #2 cylinders.
Inlet valve clearance of #1 and #3 cylinders

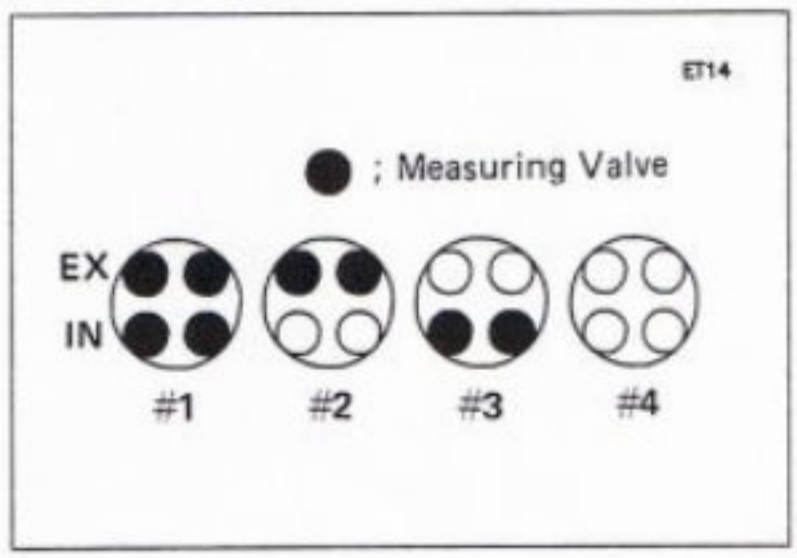

Valve Clearance Adjustment

★If the valve clearance is not within the specified range, first record the clearance, and then adjust it.

●To change the valve clearance, slide the rocker arm [A] sideways and change the shim [B]. Replace the shim with one of a different thickness.

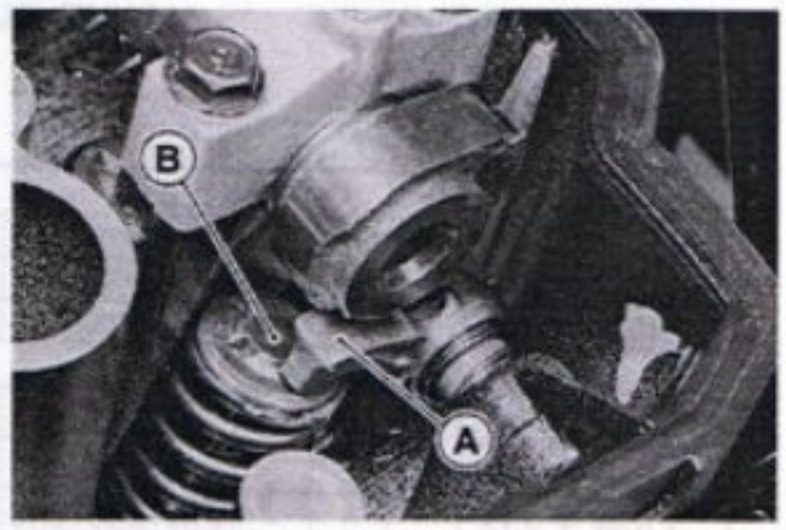

NOTE

○*Mark and record the shim locations so that the shims can be reinstalled in their original positions.*

●To select a new shim which brings the valve clearance within the specified range, refer to the Valve Clearance Adjustment Charts.

●Apply a thin coat of molybdenum disulfide grease to the rocker arms.

○Remeasure any valve clearance that was adjusted. Readjust if necessary.

CAUTION

Do not put shim stock under the shim. This may cause the shim to pop out at high rpm, causing extensive engine damage.
Do not grind the shim. This may cause it to fracture, causing extensive engine damage.

VALVE CLEARANCE ADJUSTMENT CHART
EXHAUST VALVE

	PRESENT SHIM (Example)																				
PART No. (92025 -)	1870	1871	1872	1873	1874	1875	1876	1877	1878	1879	1880	1881	1882	1883	1884	1885	1886	1887	1888	1889	1890
MARK	0	5	10	15	20	25	30	35	40	45	50	55	60	65	70	75	80	85	90	95	00
THICKNESS (mm)	2.00	2.05	2.10	2.15	2.20	2.25	2.30	2.35	2.40	2.45	2.50	2.55	2.60	2.65	2.70	2.75	2.80	2.85	2.90	2.95	3.00
VALVE CLEARANCE MEASUREMENT (Example)																					
0.00 ~ 0.03	–	–	–	–	2.00	2.05	2.10	2.15	2.20	2.25	2.30	2.35	2.40	2.45	2.50	2.55	2.60	2.65	2.70	2.75	2.80
0.04 ~ 0.08	–	–	–	2.00	2.05	2.10	2.15	2.20	2.25	2.30	2.35	2.40	2.45	2.50	2.55	2.60	2.65	2.70	2.75	2.80	2.85
0.09 ~ 0.13	–	–	2.00	2.05	2.10	2.15	2.20	2.25	2.30	2.35	2.40	2.45	2.50	2.55	2.60	2.65	2.70	2.75	2.80	2.85	2.90
0.14 ~ 0.17	–	2.00	2.05	2.10	2.15	2.20	2.25	2.30	2.35	2.40	2.45	2.50	2.55	2.60	2.65	2.70	2.75	2.80	2.85	2.90	2.95
0.18 ~ 0.24	SPECIFIED CLEARANCE/NO CHANGE REQUIRED																				
0.25 ~ 0.29	2.05	2.10	2.15	2.20	2.25	2.30	2.35	2.40	2.45	2.50	2.55	2.60	2.65	2.70	2.75	2.80	2.85	2.90	2.95	3.00	
0.30 ~ 0.34	2.10	2.15	2.20	2.25	2.30	2.35	2.40	2.45	2.50	2.55	2.60	2.65	2.70	2.75	2.80	2.85	2.90	2.95	3.00		
0.35 ~ 0.39	2.15	2.20	2.25	2.30	2.35	2.40	2.45	2.50	2.55	2.60	2.65	2.70	2.75	2.80	2.85	2.90	2.95	3.00			
0.40 ~ 0.44	2.20	2.25	2.30	2.35	2.40	2.45	2.50	2.55	2.60	2.65	2.70	2.75	2.80	2.85	2.90	2.95	3.00				
0.45 ~ 0.49	2.25	2.30	2.35	2.40	2.45	2.50	2.55	2.60	2.65	2.70	2.75	2.80	2.85	2.90	2.95	3.00					
0.50 ~ 0.54	2.30	2.35	2.40	2.45	2.50	2.55	2.60	2.65	2.70	2.75	2.80	2.85	2.90	2.95	3.00						
0.55 ~ 0.59	2.35	2.40	2.45	2.50	2.55	2.60	2.65	2.70	2.75	2.80	2.85	2.90	2.95	3.00							
0.60 ~ 0.64	2.40	2.45	2.50	2.55	2.60	2.65	2.70	2.75	2.80	2.85	2.90	2.95	3.00								
0.65 ~ 0.69	2.45	2.50	2.55	2.60	2.65	2.70	2.75	2.80	2.85	2.90	2.95	3.00									
0.70 ~ 0.74	2.50	2.55	2.60	2.65	2.70	2.75	2.80	2.85	2.90	2.95	3.00										
0.75 ~ 0.79	2.55	2.60	2.65	2.70	2.75	2.80	2.85	2.90	2.95	3.00											
0.80 ~ 0.84	2.60	2.65	2.70	2.75	2.80	2.85	2.90	2.95	3.00												
0.85 ~ 0.89	2.65	2.70	2.75	2.80	2.85	2.90	2.95	3.00													
0.90 ~ 0.94	2.70	2.75	2.80	2.85	2.90	2.95	3.00														
0.95 ~ 0.99	2.75	2.80	2.85	2.90	2.95	3.00															
1.00 ~ 1.04	2.80	2.85	2.90	2.95	3.00																
1.05 ~ 1.09	2.85	2.90	2.95	3.00																	
1.10 ~ 1.14	2.90	2.95	3.00																		
1.15 ~ 1.19	2.95	3.00																			
1.20 ~ 1.24	3.00																				

INSTALL THE SHIM OF THIS THICKNESS (mm)

1. Measure the clearance (with engine cold).
2. Check present shim size.
3. Match clearance in vertical column with present shim size in horizontal column.
4. Install the shim specified where the lines intersect. This shim will give the proper clearance.

   Example: Present shim is **2.60 mm.**
   Measured clearance is **0.30 mm.**
   Replace **2.60 mm** shim with **2.70 mm** shim.
5. Remeasure the valve clearance and readjust if necessary.

CAUTION

Be sure to remeasure the clearance after selecting a shim according to the table. The clearance can be out of the specified range because of the shim tolerance.

NOTE

○ *If the valve clearance is smaller (larger) than the standard, select a thinner (thicker) shim and then measure the clearance again.*

VALVE CLEARANCE ADJUSTMENT CHART

INLET VALVE

	PRESENT SHIM (Example)																				
PART No. (92025 -)	1870	1871	1872	1873	1874	1875	1876	1877	1878	1879	1880	1881	1882	1883	1884	1885	1886	1887	1888	1889	1890
MARK	0	5	10	15	20	25	30	35	40	45	50	55	60	65	70	75	80	85	90	95	00
THICKNESS (mm)	2.00	2.05	2.10	2.15	2.20	2.25	2.30	2.35	2.40	2.45	2.50	2.55	2.60	2.65	2.70	2.75	2.80	2.85	2.90	2.95	3.00
VALVE CLEARANCE MEASUREMENT (Example)	INSTALL THE SHIM OF THIS THICKNESS (mm)																				
0.00 ~ 0.03	–	–	–	2.00	2.05	2.10	2.15	2.20	2.25	2.30	2.35	2.40	2.45	2.50	2.55	2.60	2.65	2.70	2.75	2.80	2.85
0.04 ~ 0.08	–	–	2.00	2.05	2.10	2.15	2.20	2.25	2.30	2.35	2.40	2.45	2.50	2.55	2.60	2.65	2.70	2.75	2.80	2.85	2.90
0.09 ~ 0.12	–	2.00	2.05	2.10	2.15	2.20	2.25	2.30	2.35	2.40	2.45	2.50	2.55	2.60	2.65	2.70	2.75	2.80	2.85	2.90	2.95
0.13 ~ 0.19	SPECIFIED CLEARANCE/NO CHANGE REQUIRED																				
0.20 ~ 0.24	2.05	2.10	2.15	2.20	2.25	2.30	2.35	2.40	2.45	2.50	2.55	2.60	2.65	2.70	2.75	2.80	2.85	2.90	2.95	3.00	
0.25 ~ 0.29	2.10	2.15	2.20	2.25	2.30	2.35	2.40	2.45	2.50	2.55	2.60	2.65	2.70	2.75	2.80	2.85	2.90	2.95	3.00		
0.30 ~ 0.34	2.15	2.20	2.25	2.30	2.35	2.40	2.45	2.50	2.55	2.60	2.65	2.70	2.75	2.80	2.85	2.90	2.95	3.00			
0.35 ~ 0.39	2.20	2.25	2.30	2.35	2.40	2.45	2.50	2.55	2.60	2.65	2.70	2.75	2.80	2.85	2.90	2.95	3.00				
0.40 ~ 0.44	2.25	2.30	2.35	2.40	2.45	2.50	2.55	2.60	2.65	2.70	2.75	2.80	2.85	2.90	2.95	3.00					
0.45 ~ 0.49	2.30	2.35	2.40	2.45	2.50	2.55	2.60	2.65	2.70	2.75	2.80	2.85	2.90	2.95	3.00						
0.50 ~ 0.54	2.35	2.40	2.45	2.50	2.55	2.60	2.65	2.70	2.75	2.80	2.85	2.90	2.95	3.00							
0.55 ~ 0.59	2.40	2.45	2.50	2.55	2.60	2.65	2.70	2.75	2.80	2.85	2.90	2.95	3.00								
0.60 ~ 0.64	2.45	2.50	2.55	2.60	2.65	2.70	2.75	2.80	2.85	2.90	2.95	3.00									
0.65 ~ 0.69	2.50	2.55	2.60	2.65	2.70	2.75	2.80	2.85	2.90	2.95	3.00										
0.70 ~ 0.74	2.55	2.60	2.65	2.70	2.75	2.80	2.85	2.90	2.95	3.00											
0.75 ~ 0.79	2.60	2.65	2.70	2.75	2.80	2.85	2.90	2.95	3.00												
0.80 ~ 0.84	2.65	2.70	2.75	2.80	2.85	2.90	2.95	3.00													
0.85 ~ 0.89	2.70	2.75	2.80	2.85	2.90	2.95	3.00														
0.90 ~ 0.94	2.75	2.80	2.85	2.90	2.95	3.00															
0.95 ~ 0.99	2.80	2.85	2.90	2.95	3.00																
1.00 ~ 1.04	2.85	2.90	2.95	3.00																	
1.05 ~ 1.09	2.90	2.95	3.00																		
1.10 ~ 1.14	2.95	3.00																			
1.15 ~ 1.19	3.00																				

1. Measure the clearance (with engine cold).
2. Check present shim size.
3. Match clearance in vertical column with present shim size in horizontal column.
4. Install the shim specified where the lines intersect. This shim will give the proper clearance.

   Example: Present shim is **2.55 mm.**
   Measured clearance is **0.35 mm.**
   Replace **2.55 mm** shim with **2.75 mm** shim.
5. Remeasure the valve clearance and readjust if necessary.

CAUTION

Be sure to remeasure the clearance after selecting a shim according to the table. The clearance can be out of the specified range because of the shim tolerance.

NOTE

○ *If the valve clearance is smaller (larger) than the standard, select a thinner (thicker) shim and then measure the clearance again.*

Valve Removal

- Remove the cylinder head (see Cylinder Head Removal).
- Swing open the rocker arm.
- ○ Mark and record the shim locations so that the shims can be installed in their original positions.
- Using the valve spring compressor assembly, remove the valve.

Special Tools – Valve Spring Compressor Assembly: 57001-241 [A]
Valve Spring Compressor Adapter, Φ22: 57001-1202 [B]

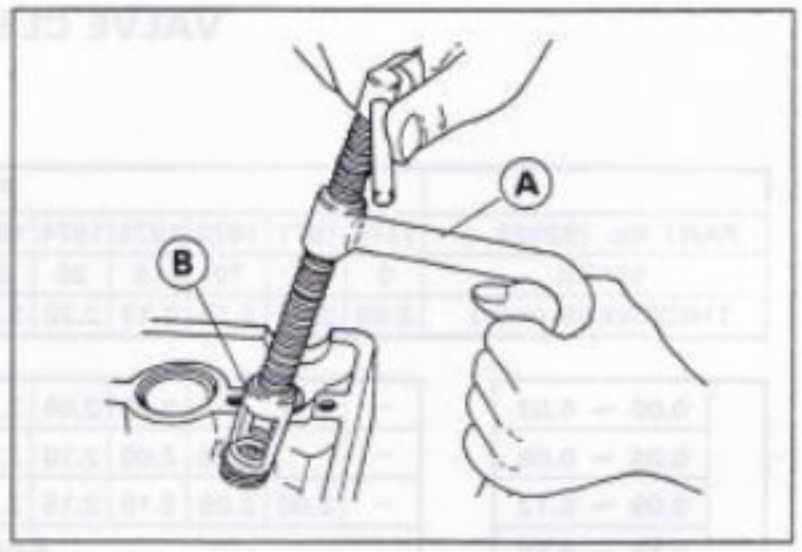

Valve Installation

- Replace the oil seal with a new one.
- Apply a thin coat of molybdenum disulfide grease to the valve stem before valve installation.
- Install the springs so that the closed coil end faces downwards.

Valve Stem [A]	Retainer [E]
Oil Seal [B]	Split Keepers [F]
Spring Seat [C]	Closed Coil End [G]
Vavle Spring [D]	

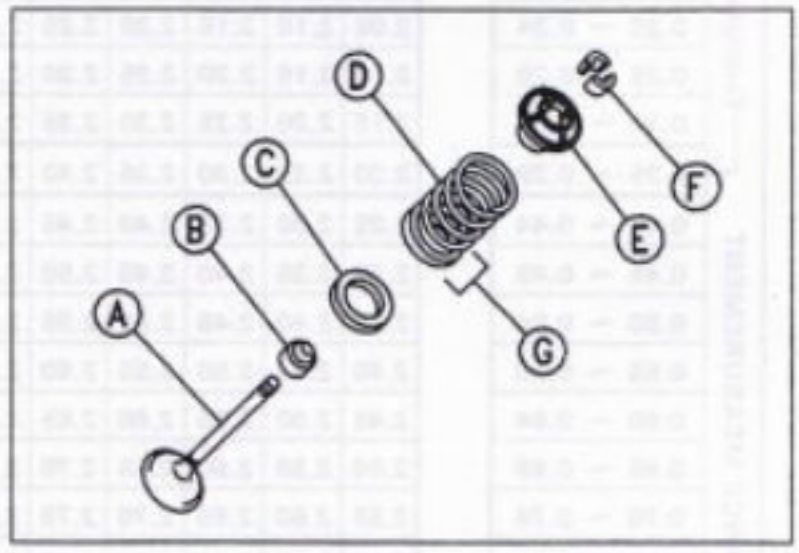

Valve Guide Removal

- Remove:
  Valve (see Valve Removal)
  Oil Seal
  Spring Seat
- Heat the area around the valve guide to 120 ~ 150°C (248 ~ 302 °F), and hammer lightly on the valve guide arbor [A] to remove the guide from the top of the head.

Special Tool – Valve Guide Arbor, Φ5: 57001-1203

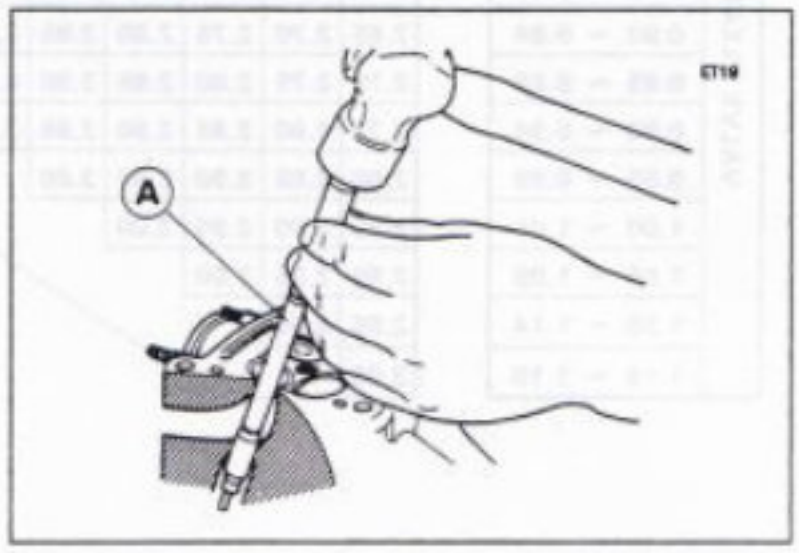

Valve Guide Installation

- Apply oil to the valve guide outer surface before installation.
- Heat the area around the valve guide hole to about 120 ~ 150 °C (248 ~ 302 °F).
- Drive the valve guide in from the top of the head using the valve guide arbor. The flange stops the guide from going in too far.

Special Tool – Valve Guide Arbor, Φ5: 57001-1203

- Ream the valve guide with valve guide reamer [A] even if the old guide is reused.

Special Tool – Valve Guide Reamer, Φ5: 57001-1204

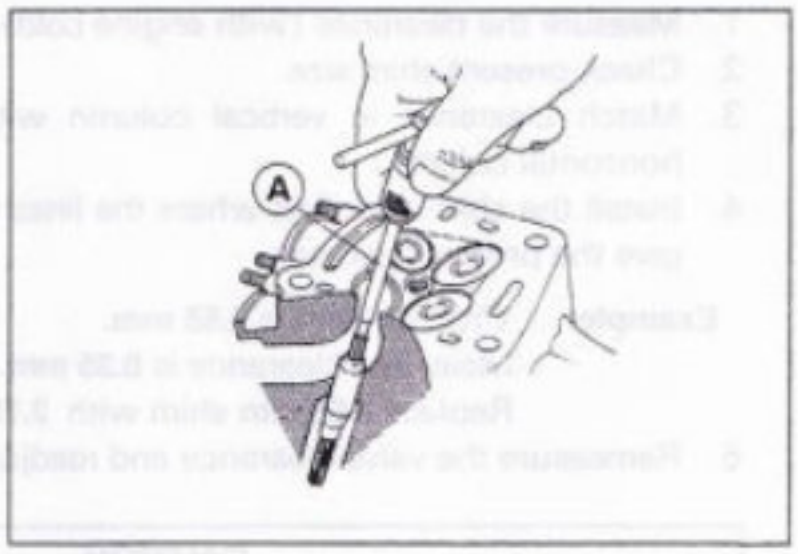

Valve-to-Guide Clearance Measurement (Wobble Method)

If a small bore gauge is not available, inspect the valve guide wear by measuring the valve to valve guide clearance with the wobble method as indicated below.

- Insert a new valve [A] into the guide [B] and set a dial gauge against the stem perpendicular to it as close as possible to the cylinder head mating surface.
- Move the stem back and forth [C] to measure valve/valve guide clearance.
- Repeat the measurement in a direction at a right angle to the first.

★ If the reading exceeds the service limit, replace the guide.

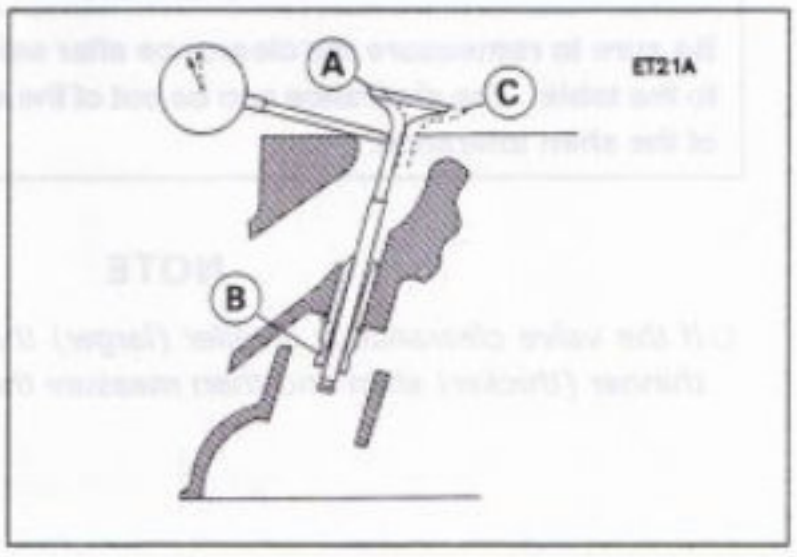

NOTE

○*The reading is not actual valve/valve guide clearance because the measuring point is above the guide.*

Valve/Valve Guide Clearance (Wobble Method)

	Standard	Service Limit
Exhaust	**0.09 ~ 0.17 mm**	**0.33 mm**
Inlet	**0.03 ~ 0.11 mm**	**0.27 mm**

Valve Seat Inspection

●Remove the valve (see Valve Removal).

●Check the valve seating surface [A] between the valve [B] and valve seat [C].

○Measure the outside diameter [D] of the seating pattern on the valve seat.

★If the outside diameter is too large or too small, repair the seat (see Seat Repair).

Valve Seating Surface Outside Diameter

Standard:	**Exhaust**	**26.3 ~ 26.5 mm**
	Inlet	**30.8 ~ 31.0 mm**

○Measure the seat width [E] of the portion where there is no build-up carbon (white portion) of the valve seat with a vernier caliper.

★If the width is too wide, too narrow or uneven, repair the seat (see Valve Seat Repair).

Valve Seating Surface Width

Standard:	**Exhaust, Inlet**	**0.5 ~ 1.0 mm**

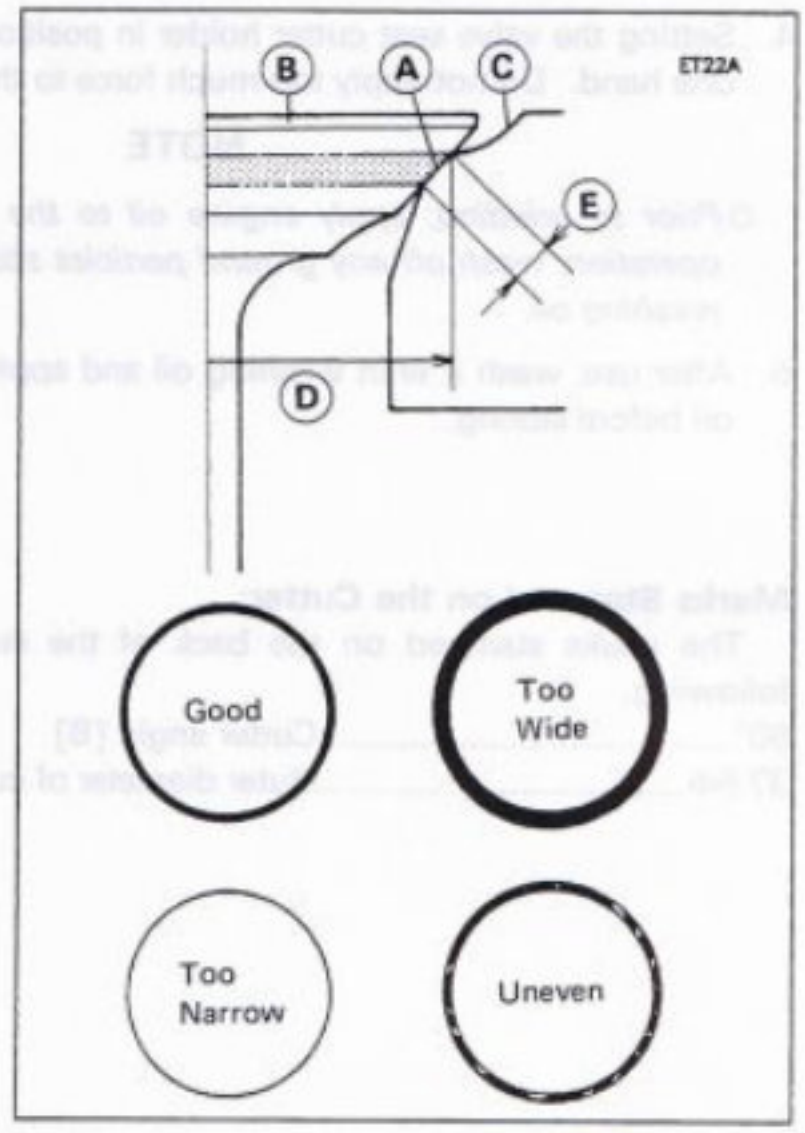

Valve Seat Repair

●Repair the valve seat with the valve seat cutters [A].

Special Tools – Valve Seat Cutter Holder, Φ5: 57001-1208 [B]
Valve Seat Cutter Holder Bar: 57001-1128 [C]

[For Exhaust Valve Seat]
Valve Seat Cutter, 45° – Φ30: 57001-1187 or 1115
Valve Seat Cutter, 32° – Φ28: 57001-1119 or 1120
Valve Seat Cutter, 60° – Φ30: 57001-1123

[For Inlet Valve Seat]
Valve Seat Cutter, 45° – Φ32: 57001-1115 or 1116
Valve Seat Cutter, 32° – Φ33: 57001-1199
Valve Seat Cutter, 60° – Φ33: 57001-1334

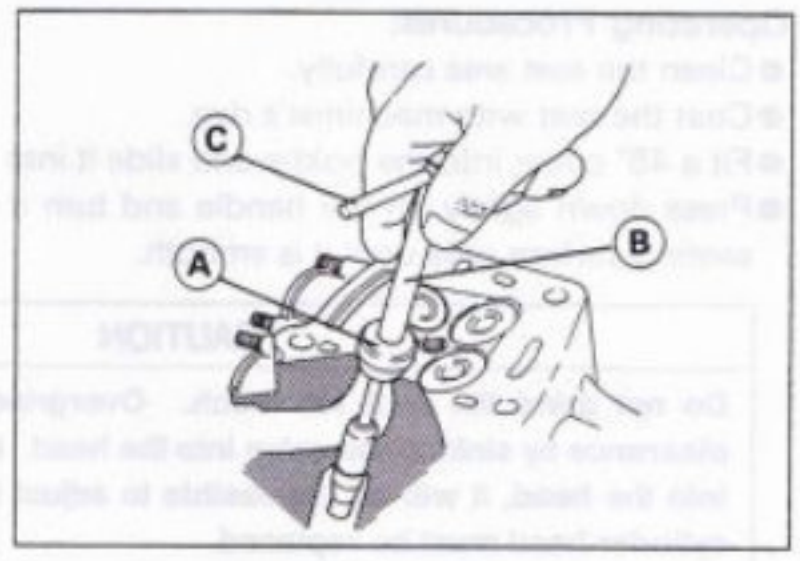

★If the manufacturer's instructions are not available, use the following procedure.

Seat Cutter Operation Care:

1. This valve seat cutter is developed to grind the valve for repair. Therefore the cutter must not be used for other purposes than seat repair.
2. Do not drop or shock the valve seat cutter, or the diamond particles may fall off.
3. Do not fail to apply engine oil to the valve seat cutter before grinding the seat surface. Also wash off ground particles sticking to the cutter with washing oil.

NOTE

○ *Do not use a wire brush to remove the metal particles from the cutter. It will take off the diamond particles.*

4. Setting the valve seat cutter holder in position, operate the cutter in one hand. Do not apply too much force to the diamond portion.

NOTE

○ *Prior to grinding, apply engine oil to the cutter and during the operation, wash off any ground particles sticking to the cutter with washing oil.*

5. After use, wash it with washing oil and apply a thin layer of engine oil before storing.

Marks Stamped on the Cutter:

The marks stamped on the back of the cutter [A] represent the following.

60° .....Cutter angle [B]
37.5Φ.....Outer diameter of cutter [C]

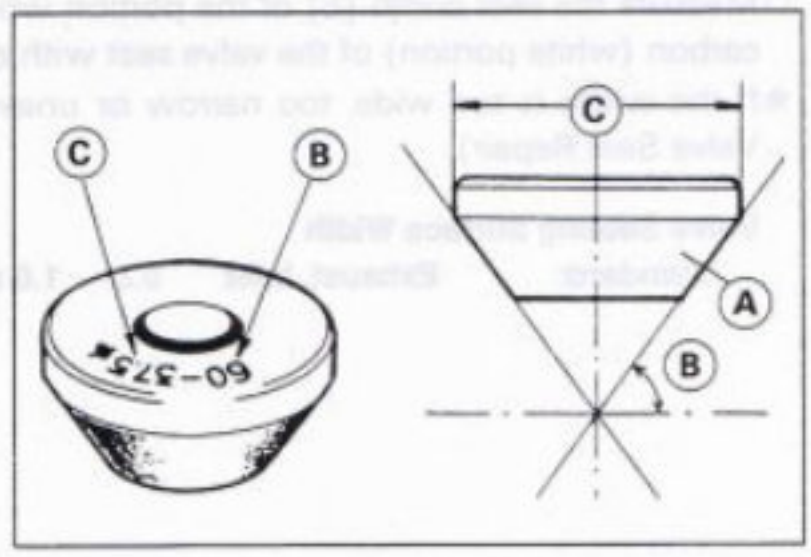

Operating Procedures:

- Clean the seat area carefully.
- Coat the seat with machinist's dye.
- Fit a 45° cutter into the holder and slide it into the valve guide.
- Press down lightly on the handle and turn it right or left. Grind the seating surface only until it is smooth.

CAUTION
Do not grind the seat too much. Overgrinding will reduce valve clearance by sinking the valve into the head. If the valve sinks too far into the head, it will be impossible to adjust the clearance, and the cylinder head must be replaced.

- Measure the outside diameter of the seating surface with a vernier caliper.

★ If the outside diameter of the seating surface is too small, repeat the 45° grind until the diameter is within the specified range.

★ If the outside diameter of the seating surface is too large, make the 32° grind described below.

★ If the outside diameter of the seating surface is within the specified range, measure the seat width as described below.

- Grind the seat at a 32° angle until the seat O.D. is within the specified range.

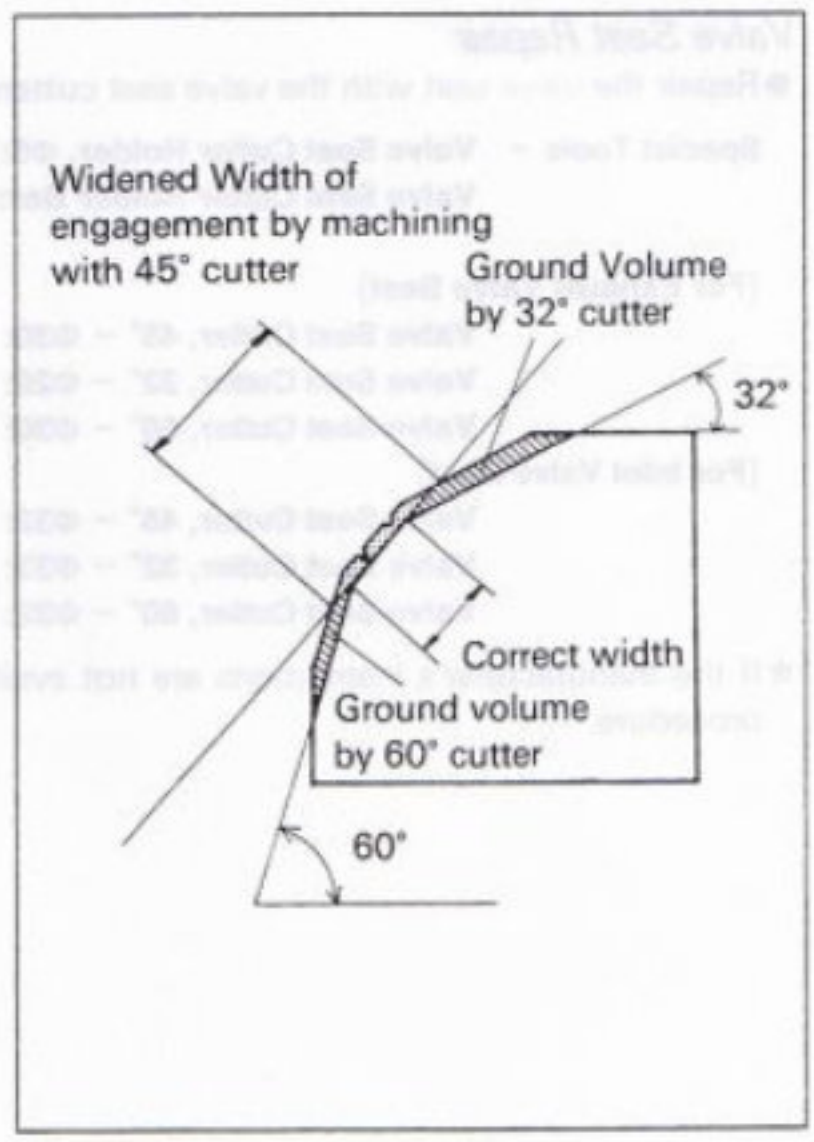

○To make the 32° grind, fit a 32° cutter into the holder, and slide it into the valve guide.
○Turn the holder one turn at a time while pressing down very lightly. Check the seat after each turn.

CAUTION
The 32° cutter removes material very quickly. Check the seat outside diameter frequently to prevent overgrinding.

○After making the 32° grind, return to the seat O.D. measurement step above.
●To measure the seat width, use a vernier caliper to measure the width of the 45° angle portion of the seat at several places around the seat.
★If the seat width is too narrow, repeat the 45° grind until the seat is slightly too wide, and then return to the seat O.D. measurement step above.
★If the seat width is too wide, make the 60° grind described below.
★If the seat width is within the specified range, lap the valve to the seat as described below.
●Grind the seat at a 60° angle until the seat width is within the specified range.
○To make the 60° grind, fit 60° cutter into the holder, and slide it into the valve guide.
○Turn the holder, while pressing down lightly.
○After making the 60° grind, return to the seat width measurement step above.
●Lap the valve to the seat, once the seat width and O.D. are within the ranges specified above.
○Put a little coarse grinding compound on the face of the valve in a number of places around the valve head.
○Spin the valve against the seat until the grinding compound produces a smooth, matched surface on both the seat and the valve.
○Repeat the process with a fine grinding compound.

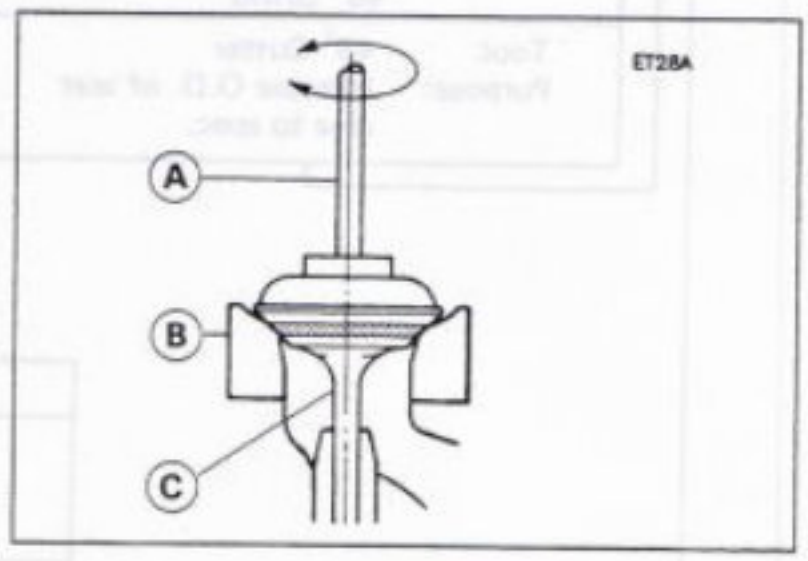

Lapper [A]
Valve Seat [B]
Valve [C]

●The seating area should be marked about in the middle of the valve face.
★If the seat area is not in the right place on the valve, check to be sure the valve is the correct part. If it is, it may have been refaced too much; replace it.
●Be sure to remove all grinding compound before assembly.
●When the engine is assembled, be sure to adjust the valve clearance (see Valve Clearance Adjustment).

Valve Seat Repair

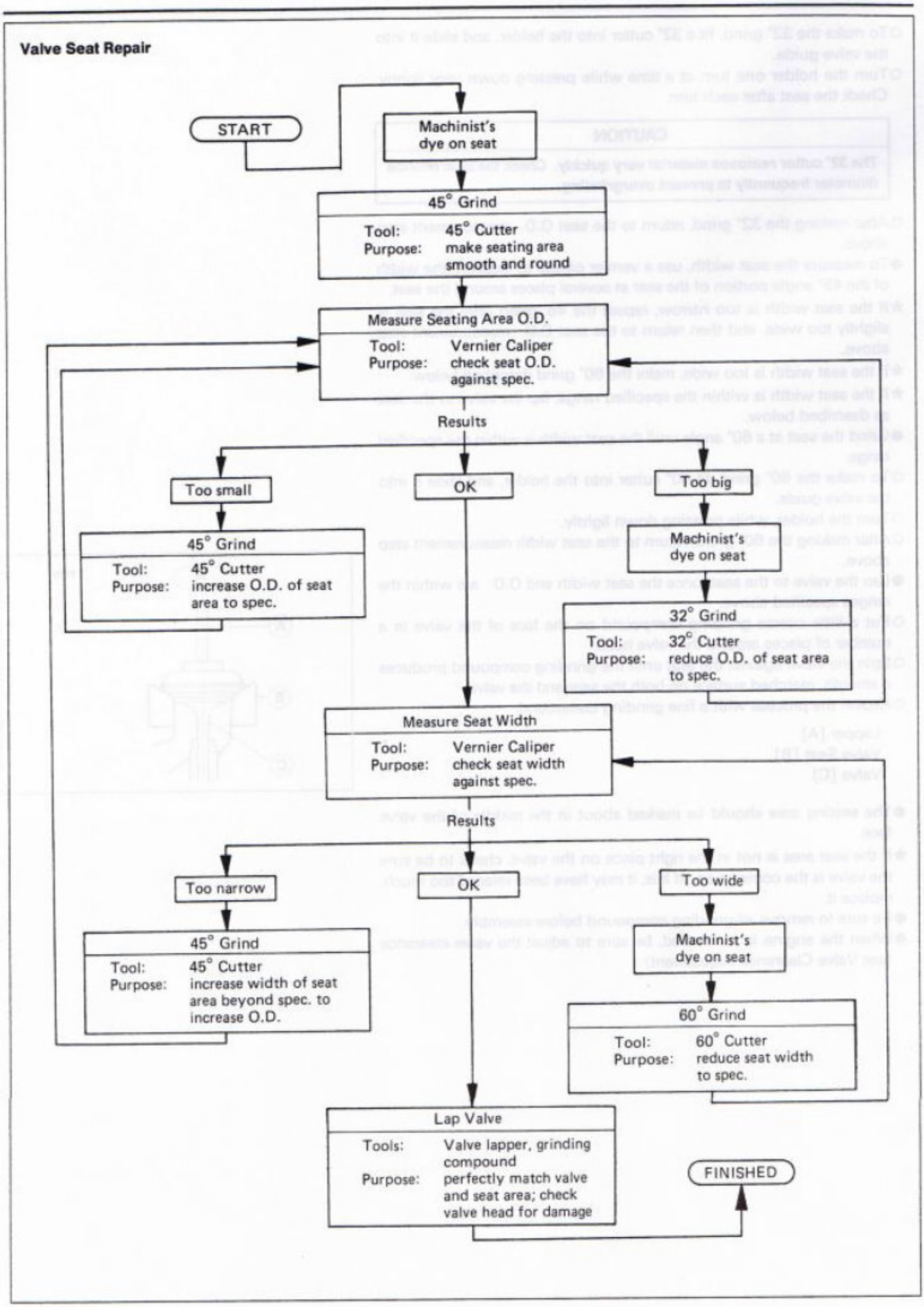

Cylinder, Pistons

Cylinder Removal

- Remove:
  - Cylinder Head (see Cylinder Head Removal)
  - Coolant Hose [A]
  - Front Camshaft Chain Guide [B]
  - Cylinder Bolts [C]
- Tap lightly up the cylinder with a plastic mallet to separate from the crankcase.
- Remove the cylinder and base gasket.

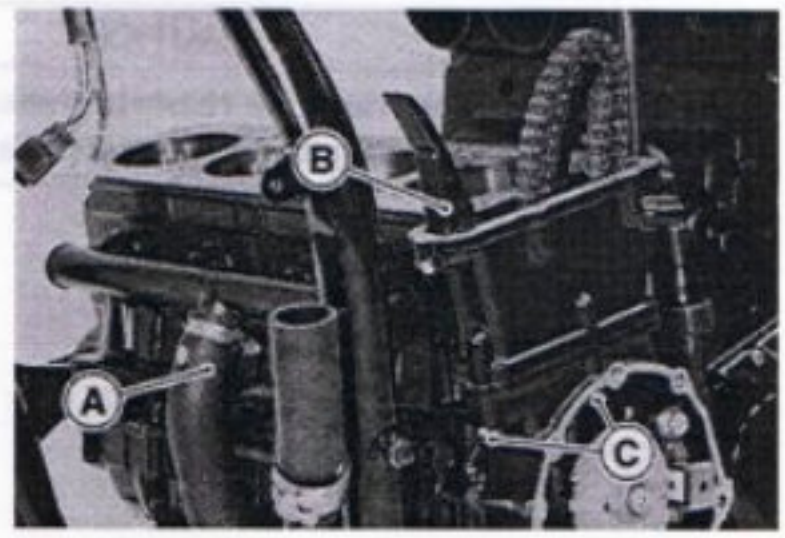

Piston Removal

- Remove the cylinder (see Cylinder Removal).
- Place a clean cloth under the pistons and remove the piston pin snap ring [A] from the outside of each piston.

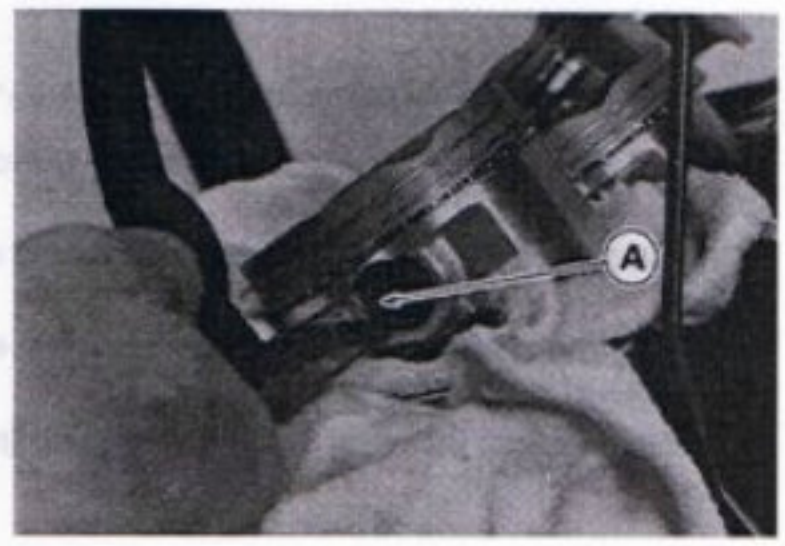

- Remove the piston pins.

  Special Tool – Piston Pin Puller Assembly: 57001-910 [A]
- Remove the piston.

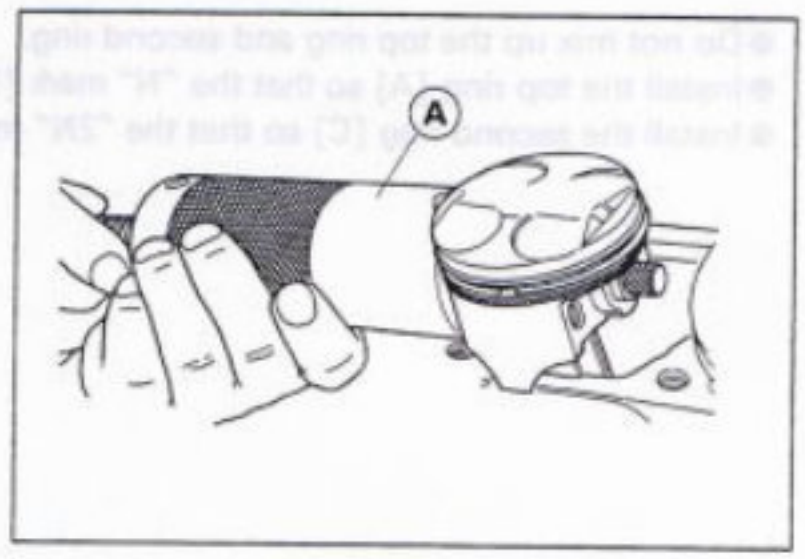

- Carefully spread the ring opening with your thumbs and then push up on the opposite side of the ring [A] to remove it.
- Remove the 3-piece oil ring with your thumbs in the same manner.

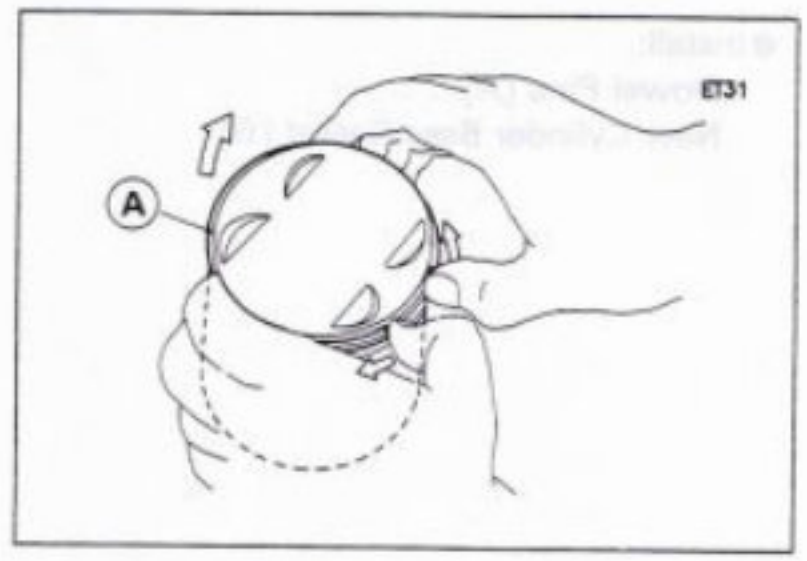

Cylinder, Piston Installation

NOTE

○ *If a new piston or cylinder is used, check piston to cylinder clearance (see Piston/Cylinder Clearance), and use new piston ring.*

- The arrow on the piston head must point toward the front of the engine.
- Fit a new piston pin snap ring into the side of the piston so that the ring opening [A] does not coincide with the slit [B] of the piston pin hole.

○ When installing the piston pin snap ring, compress it only enough to install it and no more.

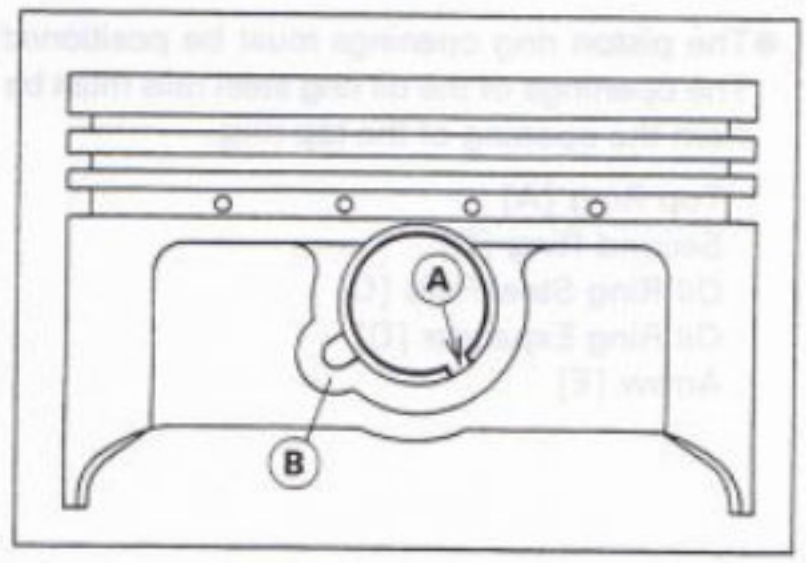

CAUTION

Do not reuse snap rings, as removal weakens and deforms them. They could fall out and score the cylinder wall.

NOTE

○ *The oil ring rails have no "top" or "bottom".*

- Install the oil ring expander [A] in the bottom piston ring groove so the ends [B] butt together.
- Install the oil ring steel rails, one above the expander and one below it.

○ Spread the rail with your thumbs, but only enough to fit the rail over the piston.
○ Release the rail into the bottom piston ring groove.

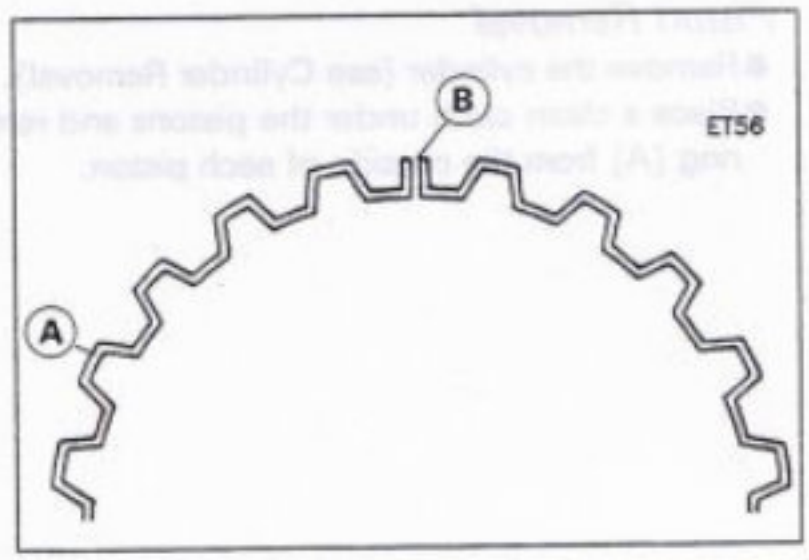

- Do not mix up the top ring and second ring.
- Install the top ring [A] so that the "N" mark [B] faces up.
- Install the second ring [C] so that the "2N" mark [D] faces up.

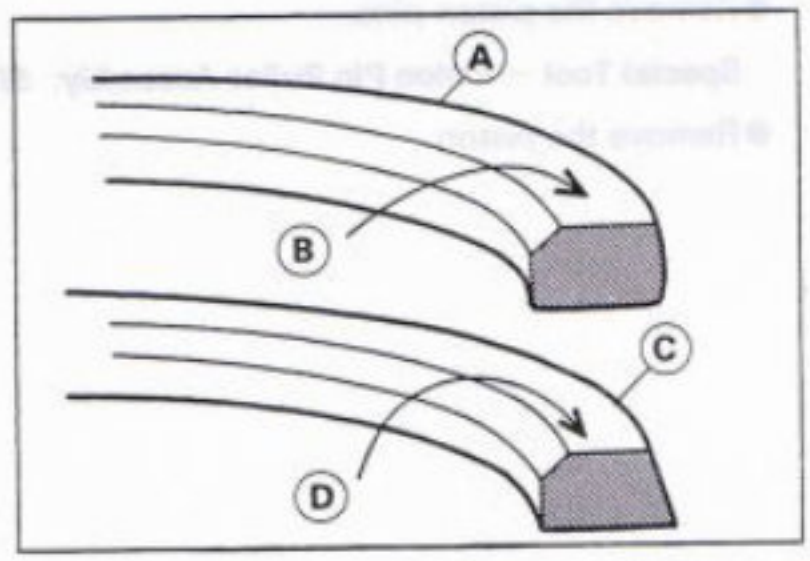

- Install:
  Dowel Pins [A]
  New Cylinder Base Gasket [B]

- The piston ring openings must be positioned as shown in the figure. The openings of the oil ring steel rails must be about 30 ~ 40° of angle from the opening of the top ring.

  Top Ring [A]
  Second Ring [B]
  Oil Ring Steel Rails [C]
  Oil Ring Expander [D]
  Arrow [E]

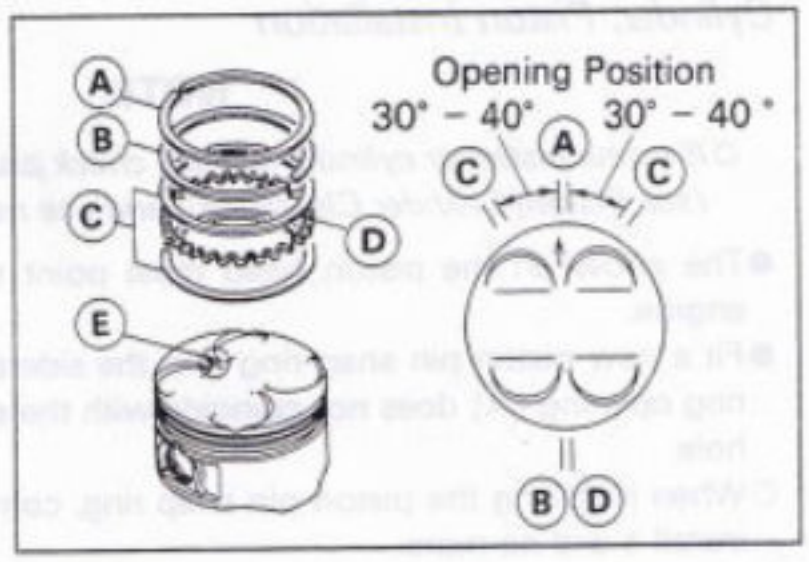

- Apply engine oil to the cylinder bore.
- Prepare two auxiliary head bolts with their head cut.
- Install the two bolts [A] diagonally in the crankcase.

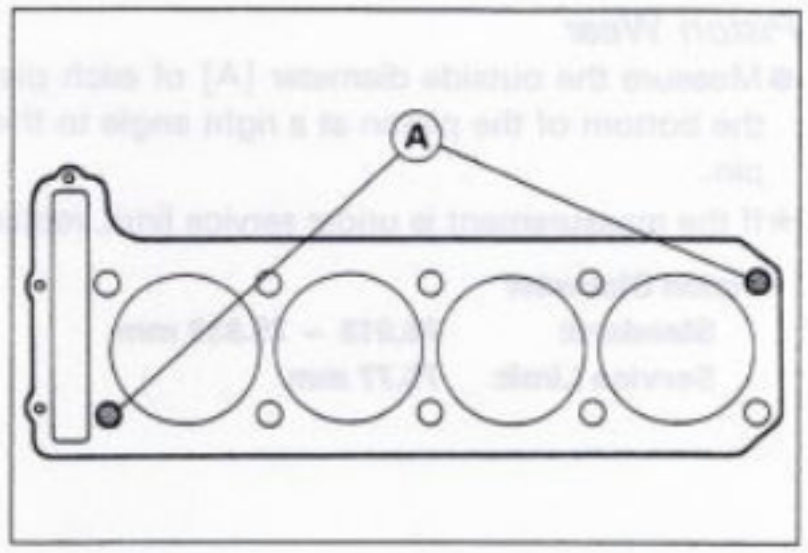

- Position the crankshaft so that all the piston heads are almost level.
- Install the cylinder block [A].
  Auxiliary Head Bolts [B]
  Pistons [C]
- ○ Insert the piston rings with your thumbs.

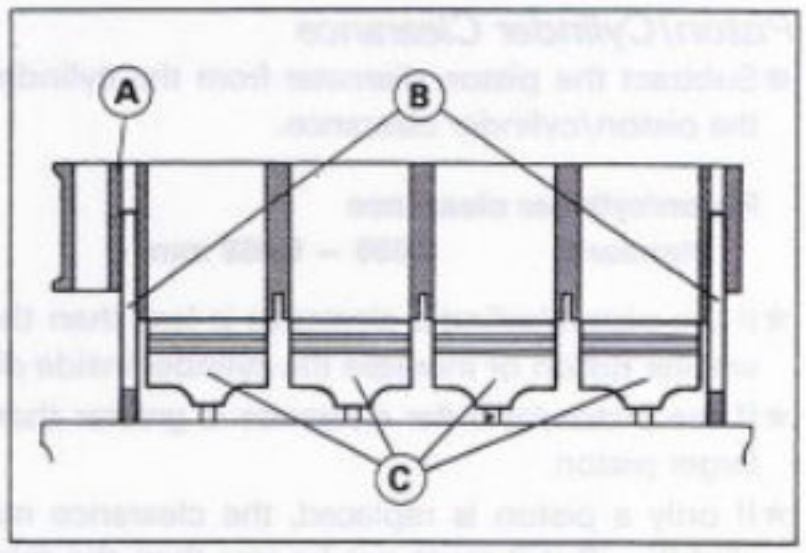

- Insert the front camshaft chain guide [A]. Push the guide all the way down.
- If the rear camshaft chain guide [B] removed, install it.
- ○ Apply a non-permanent locking agent to the threads of the rear camshaft chain guide bolt [C] and tighten it.

Torque – Rear Camshaft Chain Guide Bolt : 20 N-m (2.0 kg-m, 14.5 ft-lb)

- Tighten the cylinder bolts (6 mm) [D].

Torque – Cylinder Bolts (6 mm): 15 N-m (1.5 kg-m, 11.0 ft-lb)

- ○ After installing the cylinder head, recheck the torque.

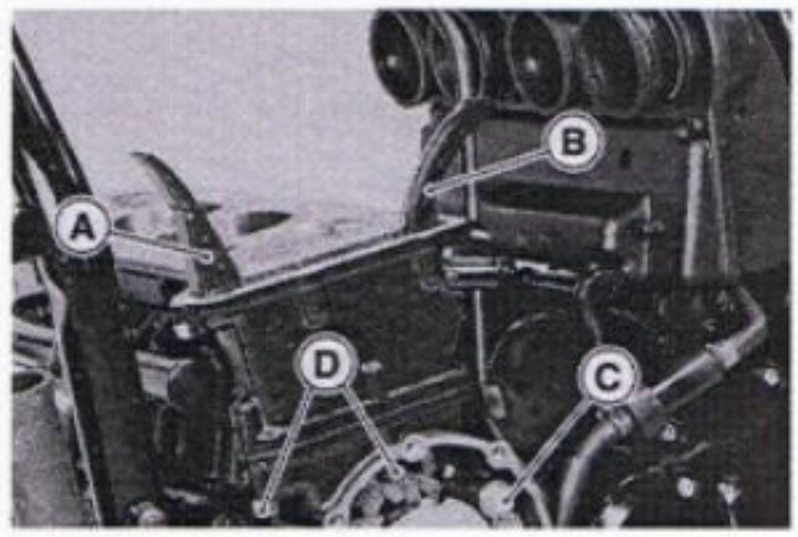

Cylinder Wear

- Since there is a difference in cylinder wear in different directions, take a side-to-side and a front-to-back measurement at each of the two locations (total of four measurements) shown in the figure.
- ★ If any of the cylinder inside diameter measurements exceeds the service limit, replace the cylinder.

10 mm [A]
60 mm [B]

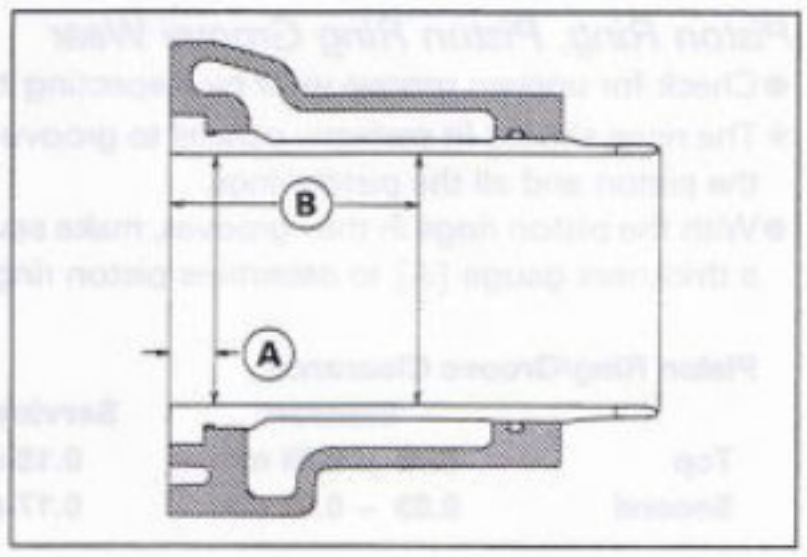

Cylinder Inside Diameter

Standard: **75.994 ~ 76.006 mm, and less than 0.01 mm difference between any two measurements.**

Service Limit: **76.10 mm, or 0.05 mm difference between any two measurements.**

Piston Wear

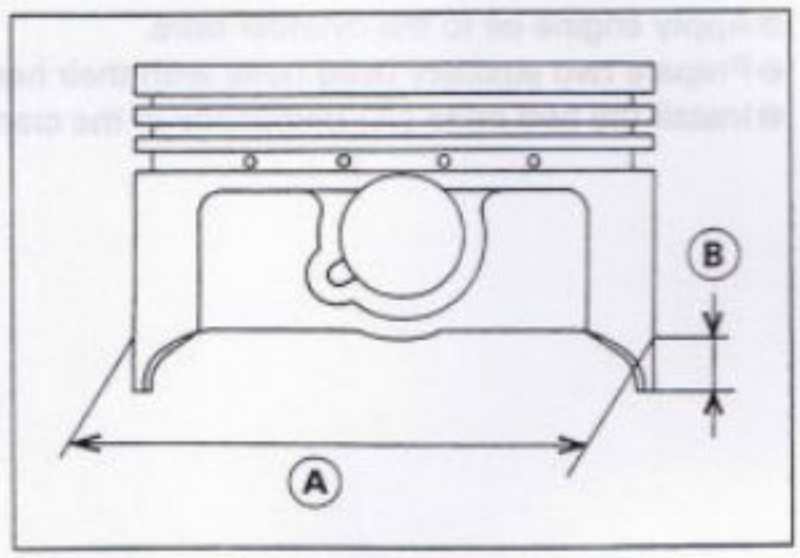

- Measure the outside diameter [A] of each piston 5 mm [B] up from the bottom of the piston at a right angle to the direction of the piston pin.

★If the measurement is under service limit, replace the piston.

Piston Diameter

Standard:	**75.918 ~ 75.938 mm**
Service Limit:	**75.77 mm**

Piston/Cylinder Clearance

- Subtract the piston diameter from the cylinder inside diameter to get the piston/cylinder clearance.

Piston/cylinder clearance

Standard:	**0.056 ~ 0.088 mm**

★If the piston/cylinder clearance is less than the specified range, use a smaller piston or increase the cylinder inside diameter by honing.

★If the piston/cylinder clearance is greater than specified range, use a larger piston.

★If only a piston is replaced, the clearance may exceed the standard slightly. But it must not be less than the minimum in order to avoid piston seizure.

Piston Ring, Piston Ring Groove Wear

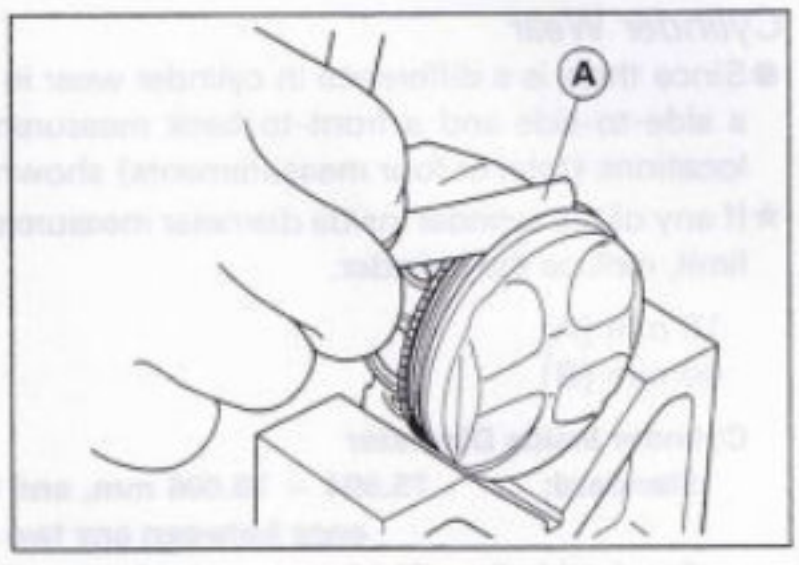

- Check for uneven groove wear by inspecting the ring seating.

★The rings should fit perfectly parallel to groove surfaces. If not, replace the piston and all the piston rings.

- With the piston rings in their grooves, make several measurements with a thickness gauge [A] to determine piston ring/groove clearance.

Piston Ring/Groove Clearance

	Standard	Service Limit
Top	**0.05 ~ 0.09 mm**	**0.19 mm**
Second	**0.03 ~ 0.07 mm**	**0.17 mm**

★If the piston ring groove clearance is greater than the service limit, measure the ring thickness and groove width as follows to decide whether to replace the rings, the piston or both.

Piston Ring Groove Width

● Measure the piston ring groove width.
○ Use a vernier caliper at several points around the piston.

Piston Ring Groove Width

Top	**Standard**	**0.84 ~ 0.86 mm**
	Service Limit:	**0.94 mm**
Second	**Standard**	**0.82 ~ 0.84 mm**
	Service Limit:	**0.92 mm**

★ If the width of any of the two grooves is wider than the service limit at any point, replace the piston.

Piston Ring Thickness

● Measure the piston ring thickness.
○ Use a micrometer to measure at several points around the ring.

Piston Ring Thickness (Top, Second)

Standard:	**0.77 ~ 0.79 mm**
Service Limit:	**0.70 mm**

★ If any of the measurements is less than the service limit on either of the rings, replace all the rings.

NOTE

○ *When using new rings in a used piston, check for uneven groove wear. The rings should fit perfectly parallel to the groove sides. If not, replace the piston.*

Piston Ring End Gap

● Place the piston ring [A] inside the cylinder, using the piston to locate the ring squarely in place. Set it close to the bottom of the cylinder, where cylinder wear is low.
● Measure the gap [B] between the ends of the ring with a thickness gauge.

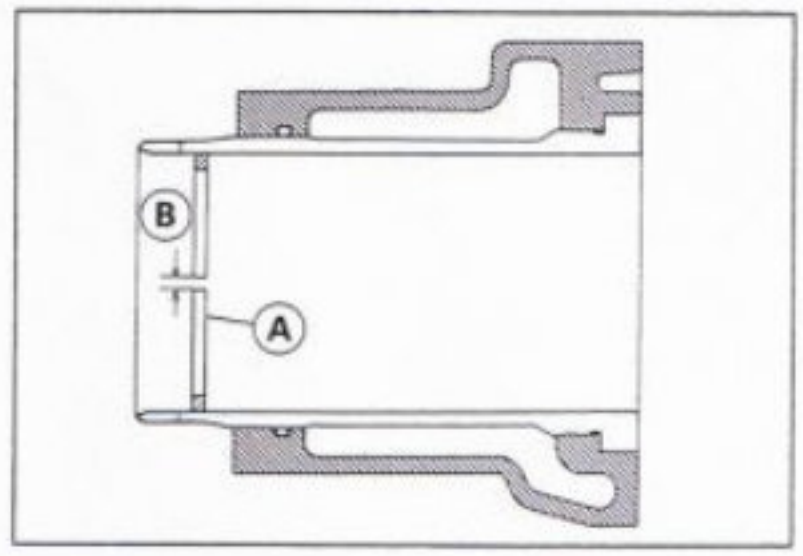

Piston Ring End Gap

	Standard	Service Limit
Top	**0.25 ~ 0.37 mm**	**0.67 mm**
Second	**0.20 ~ 0.35 mm**	**0.65 mm**
Oil	**0.2 ~ 0.7 mm**	**1.0 mm**

★ If the end gap of either ring is greater than the service limit, replace all the rings.

Carburetor Holder

Carburetor Holder Installation

- Install the carburetor holder with the grooves [A] downward.

Torque – Carburetor Holder Bolts: 12 N-m (1.2 kg-m, 104 in-lb)

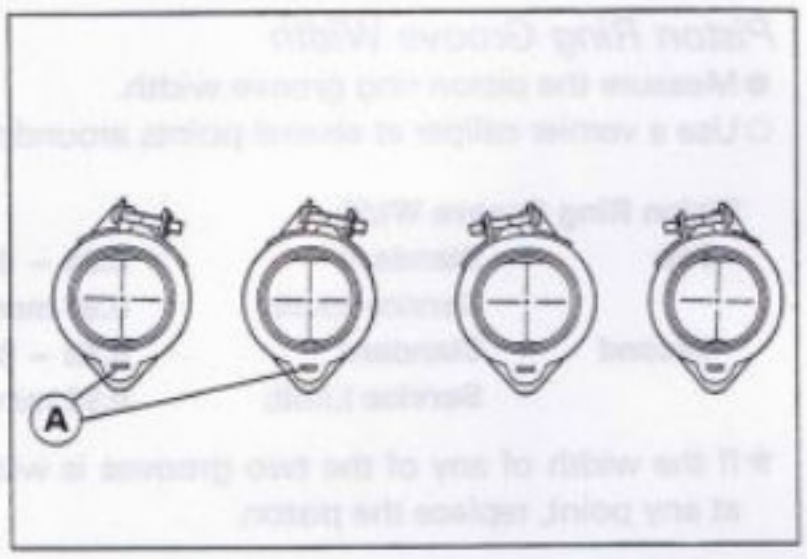

Muffler

Muffler Removal

- Drain the coolant (see Cooling System chapter).
- Remove:
  Radiator (see Cooling System chapter)
  Muffler Body Clamp Nut [A] and Washer
  Muffler Clamp Bolt [B]
  Exhaust Pipe Holder Nuts [C]
  Muffler

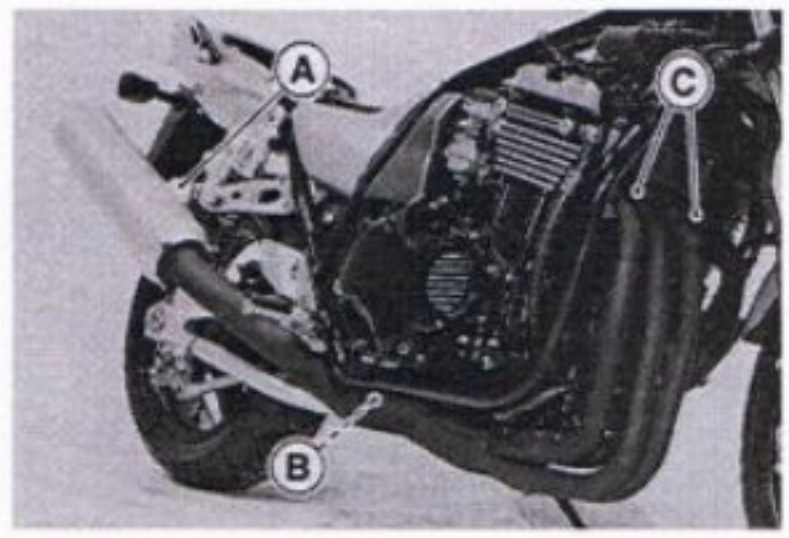

Muffler Installation

- Replace the exhaust pipe gaskets with new ones.
- Tighten:

Torque – Muffler Clamp Bolt: 34 N-m (3.5 kg-m, 25 ft-lb)
Muffler Body Clamp Nut: 34 N-m (3.5 kg-m, 25 ft-lb)

Muffler Body Removal

- Remove:
  Muffler Body Mounting Nuts [A]
  Muffler Body Clamp Nut [B] and Washer
  Muffler Body [C]

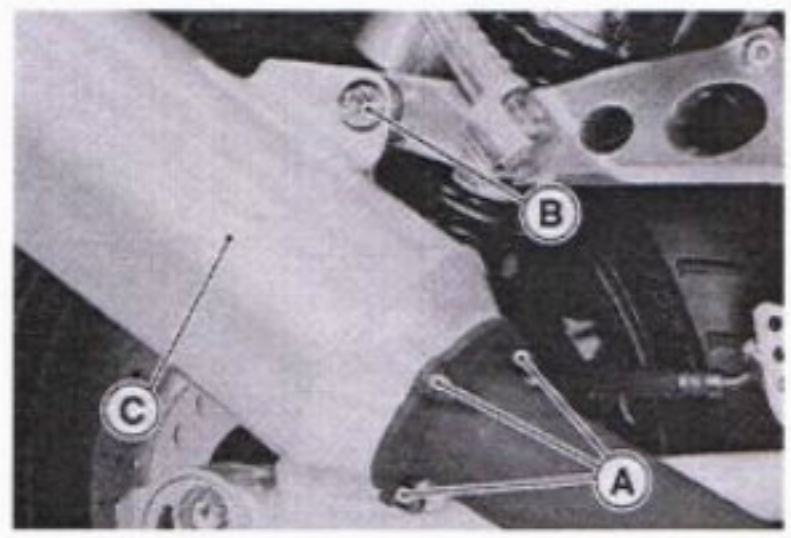

Muffler Body Installation

- Tighten:

Torque – Muffler Body Mounting Nuts: 25 N-m (2.5 kg-m, 18.0 ft-lb)
Muffler Body Clamp Nut: 34 N-m (3.5 kg-m, 25 ft-lb)

Clutch

Table of Contents

Exploded View 5-2
Specifications 5-4
Clutch Fluid 5-5
Fluid Level Inspection 5-5
Clutch Fluid Change 5-5
Bleeding the Clutch Line 5-6
Clutch Master Cylinder 5-7
Clutch Master Cylinder Removal 5-7
Clutch Master Cylinder Installation 5-7
Clutch Master Cylinder Disassembly 5-8
Clutch Master Cylinder Assembly 5-8
Clutch Master Cylinder Inspection (Visual Inspection) 5-8
Clutch Slave Cylinder 5-10
Clutch Slave Cylinder Removal 5-10
Clutch Slave Cylinder Installation 5-10
Clutch Slave Cylinder Disassembly 5-11
Clutch Slave Cylinder Assembly 5-11
Clutch 5-12
Clutch Removal 5-12
Clutch Installation 5-13
Clutch Disassembly 5-14
Friction and Steel Plate Damage, Wear 5-14
Friction and Steel Plate Warp 5-15
Clutch Spring Free Length Measurement 5-15
Clutch Housing Finger Damage 5-15
Clutch Hub Spline Damage 5-15
Cam Damper Inspection 5-15

Exploded View

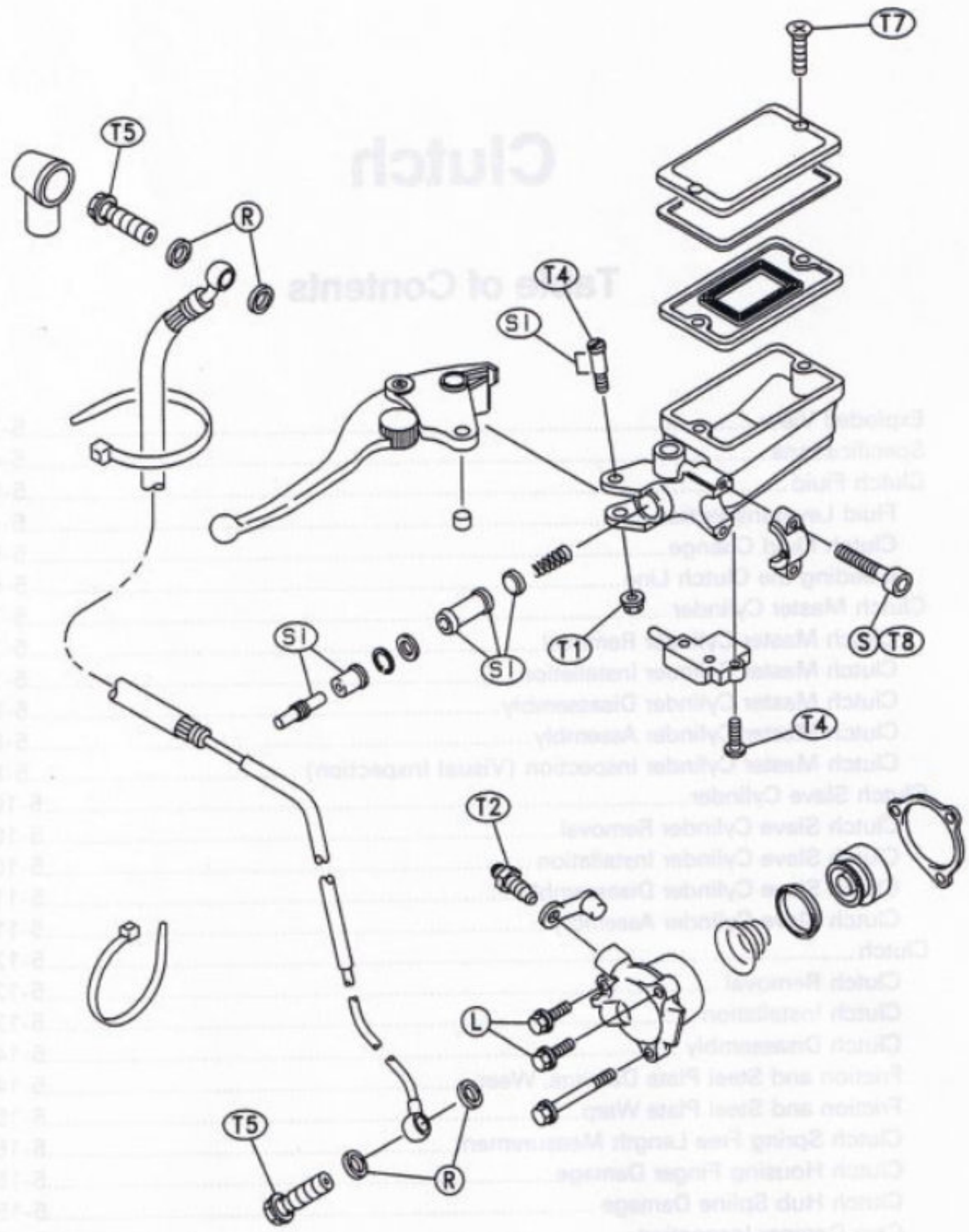

T1: 5.9 N-m (0.60 kg-m, 52 in-lb)
T2: 7.8 N-m (0.80 kg-m, 69 in-lb)
T3; 11 N-m (1.1 kg-m, 95 in-lb)
T4: 1.0 N-m (0.10 kg-m, 9 in-lb)
T5: 25 N-m(2.5 kg-m, 18.0 ft-lb)
T6: 130 N-m(13.5 kg-m, 98 ft-lb)
T7: 1.5 N-m (0.15 kg-m, 13 in-lb)
T8: 8.8 N-m (0.90 kg-m, 78 in-lb)
T9: 9.8 N-m (1.0 kg-m, 87 in-lb)
T10: 12 N-m (1.2 kg-m, 104 in-lb)

Si: Apply silicone grease.
EO: Apply engine oil.
L: Apply a non-permanent locking agent.
M: Apply molybdenum disulfide grease.
R: Replacement Parts
S: Follow the specified tightening sequence.

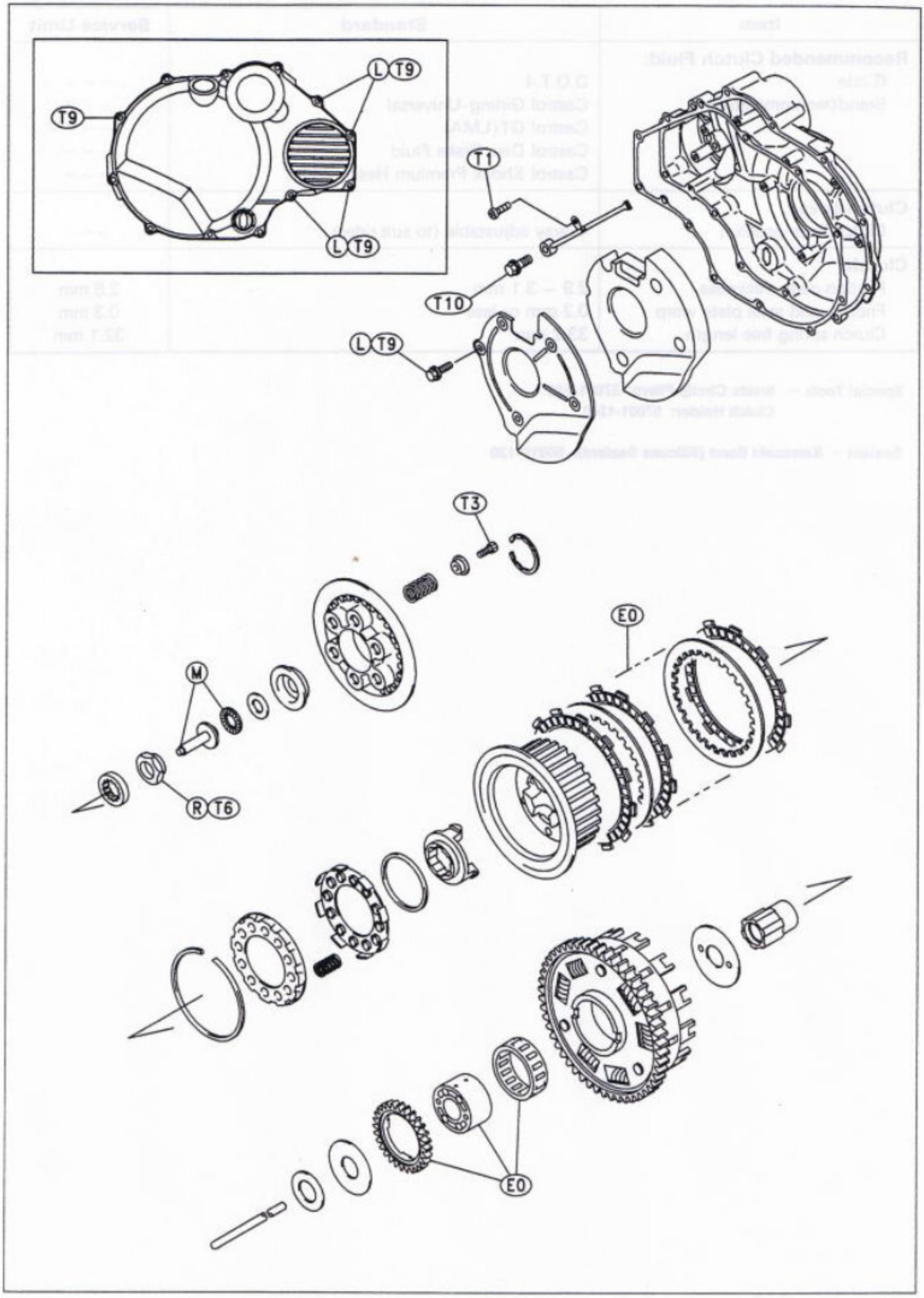
L T9
T9
L T9
T1
T10
L T9
T3
EO
M
R T6
EO

Specifications

Item	Standard	Service Limit
Recommended Clutch Fluid:		
Grade	D.O.T.4	- - -
Brand(recommended)	Castrol Girling-Universal	- - -
	Castrol GT(LMA)	- - -
	Castrol Disc Brake Fluid	- - -
	Castrol Shock Premium Heavy Duty	- - -
Clutch Lever:		
Clutch lever position	4-way adjustable (to suit rider)	---
Clutch:		
Friction plate thickness	2.9 ~ 3.1 mm	2.8 mm
Friction and steel plate warp	0.2 mm or less	0.3 mm
Clutch spring free length	33.2 mm	32.1 mm

Special Tools – Inside Circlip Pliers: 57001-143
Clutch Holder: 57001-1243

Sealant – Kawasaki Bond (Silicone Sealant): 56019-120

Clutch Fluid

Fluid Level Inspection

- Check that the brake fluid level in the clutch reservoir [A] is above the lower level line [B].

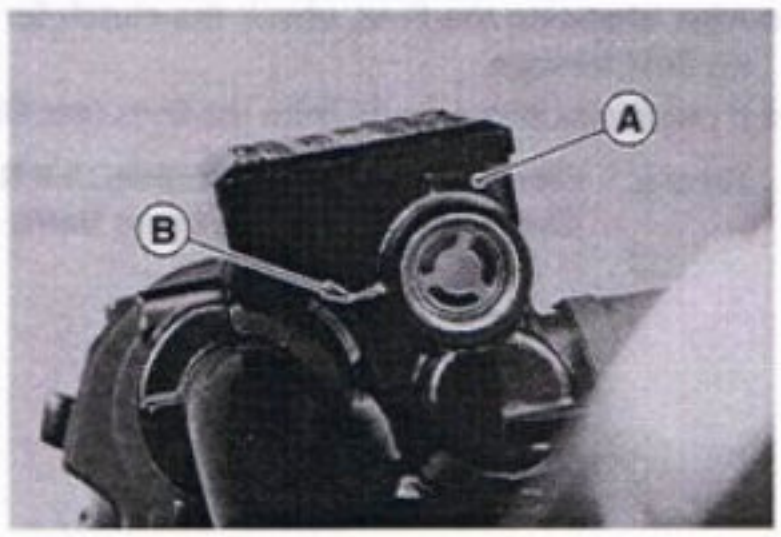

NOTE

○ *Hold the reservoir horizontal when checking clutch fluid level.*

★If the fluid level is lower than the lower level line, fill the reservoir to the upper level line [A] in the reservoir.

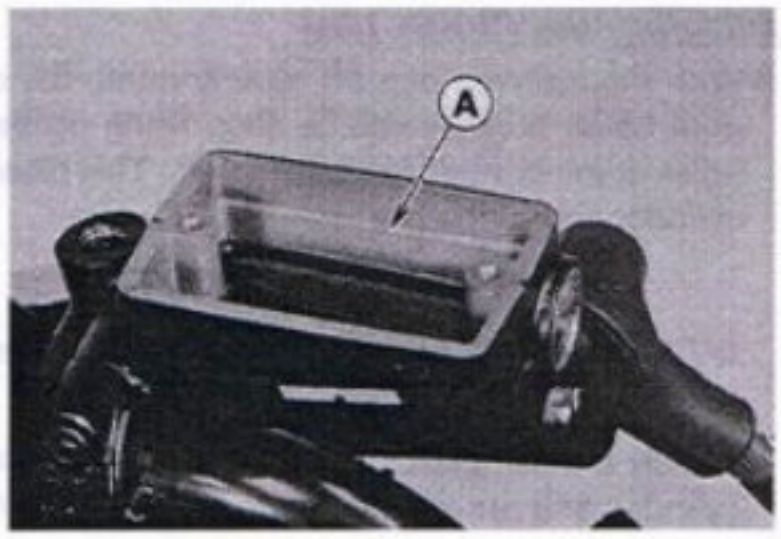

⚠WARNING

Change the fluid in the clutch line completely if the fluid must be refilled but the type and brand of the fluid that already is in the reservoir are unidentified.
After changing the fluid, use only the same type and brand of fluid thereafter. Mixing different types and brands of fluid lowers the fluid boiling point and could cause the clutch to be ineffective. It may also cause the rubber clutch parts to deteriorate.

Recommended Clutch Fluid
Grade: D.O.T.4
Brand: Castrol Girling-Universal
Castrol GT (LMA)
Castrol Disc Brake Fluid
Castrol Shock Premium Heavy Duty

NOTE

○ *Since the clutch fluid is the same as the brake fluid, refer to Brake Fluid Section in Brakes chapter for further details.*

Torque – Clutch Reservoir Cap Screws : 1.5 N-m (0.15 kg-m, 13 in-lb)

Clutch Fluid Change

- Remove the clutch slave cylinder cover (see Clutch Slave Cylinder Removal).
- Level the clutch fluid reservoir and remove the reservoir cap.
- Remove the rubber cap from the bleed valve on the clutch slave cylinder.
- Attach a clear plastic hose to the bleed valve and run the other end of the hose into a container.
- Fill the reservoir with fresh fluid.
- Change the clutch fluid as follows.
  Open the bleed valve [A], using a wrench.
  Apply the clutch lever and hold it [B].
  Close the bleed valve [C].
  Release the clutch lever [D].

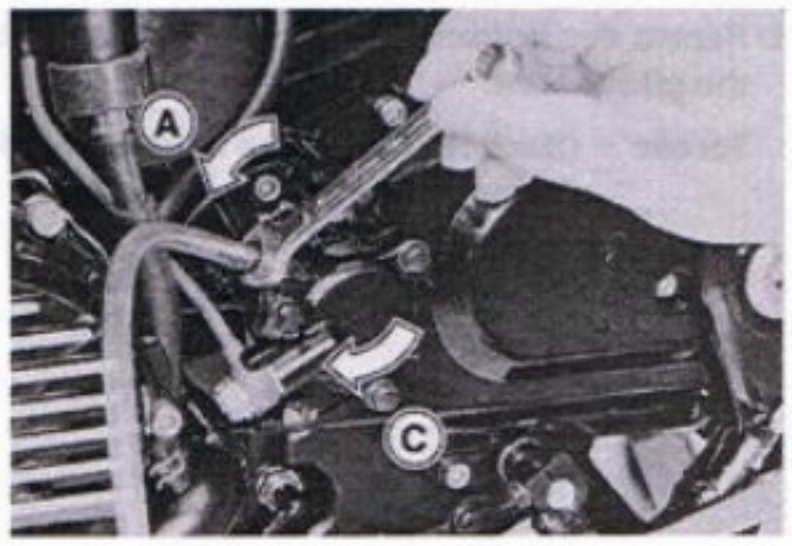

○ Repeat this operation until fresh fluid comes out from the plastic hose or the color of the fluid changes.
○ Check the fluid level in the reservoir often, replenishing it as necessary.

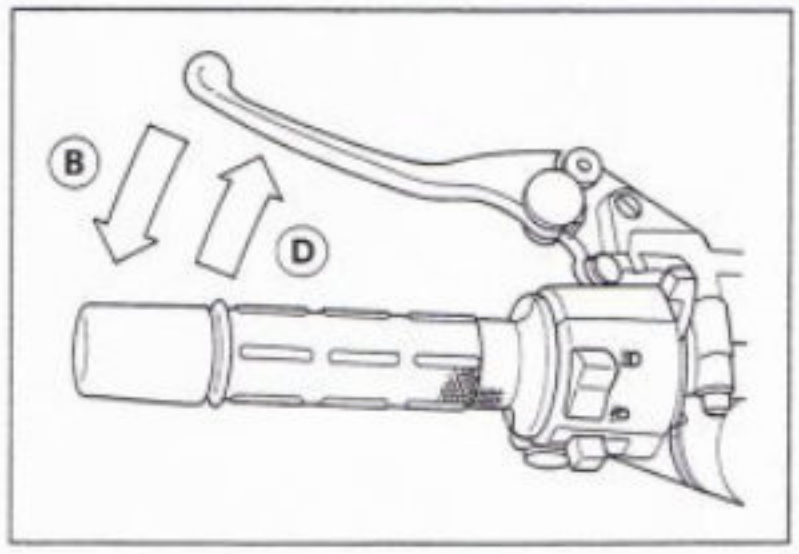

NOTE

○ *If the fluid in the reservoir runs completely out any time during fluid changing, the bleeding operation must be done over again from the beginning since air will have entered the line.*

- After changing the fluid, check the clutch for good clutch power and no fluid leakage.

★If necessary, bleed the air from the lines (see Bleeding the Clutch Line).

Torque – Clutch Reservoir Cap Screws : 1.5 N-m (0.15 kg-m, 13 in-lb)
Clutch Slave Cylinder Bleed Valve : 7.8 N-m (0.80 kg-m, 69 in-lb)

Bleeding the Clutch Line

- With the reservoir cap off, slowly pump the clutch lever several times until no air bubbles can be seen rising up through the fluid from the holes at the bottom of the reservoir. This bleeds the air from the master cylinder end of the line.

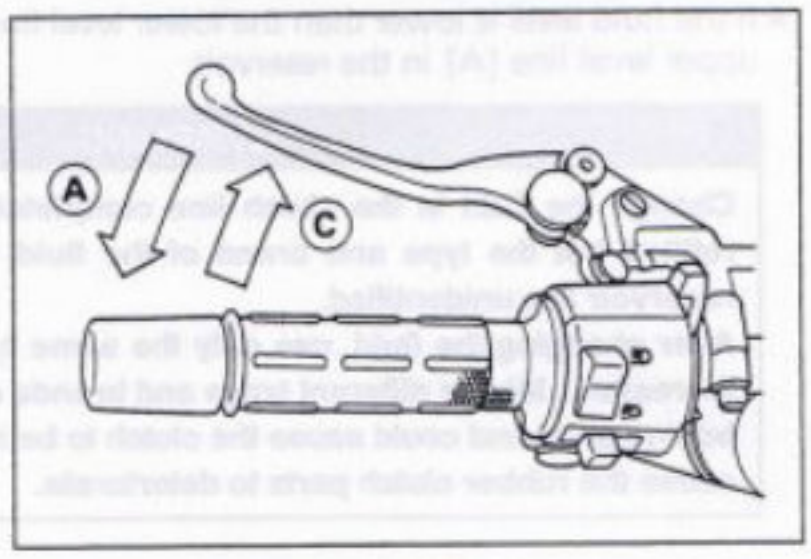

NOTE

○ *Tap the clutch hose lightly going from the lower end to the upper end and bleed the air off at the reservoir.*

- Attach a clear plastic hose to the bleed valve on the clutch slave cylinder, and run the other end of the hose into a container.

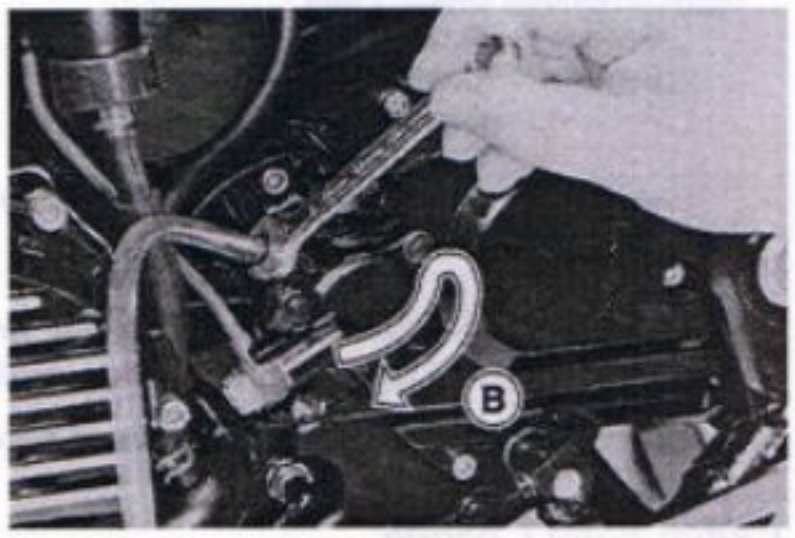

- Bleed the clutch line as follows:
  Pump the clutch lever a few times until it becomes hard and then hold it applied [A].
  Quickly open and close the bleed valve [B].
  Release the clutch lever [C].
  Check the fluid level in the reservoir often, replenishing it as necessary.

NOTE

○ *If the fluid in the reservoir runs completely out any time during bleeding, the bleeding operation must be done over again from the beginning since air will have entered the line.*

○ Repeat this operation until no more air can be seen coming out into the plastic hose.

Torque – Clutch Reservoir Cap Screws : 1.5 N-m (0.15 kg-m, 13 in-lb)
Clutch Slave Cylinder Bleed Valve : 7.8 N-m (0.80 kg-m, 69 in-lb)

Clutch Master Cylinder

Clutch Master Cylinder Removal

- Disconnect the starter lockout switch connector [A].
- Drain the clutch fluid from the reservoir (see Clutch Fluid Change).

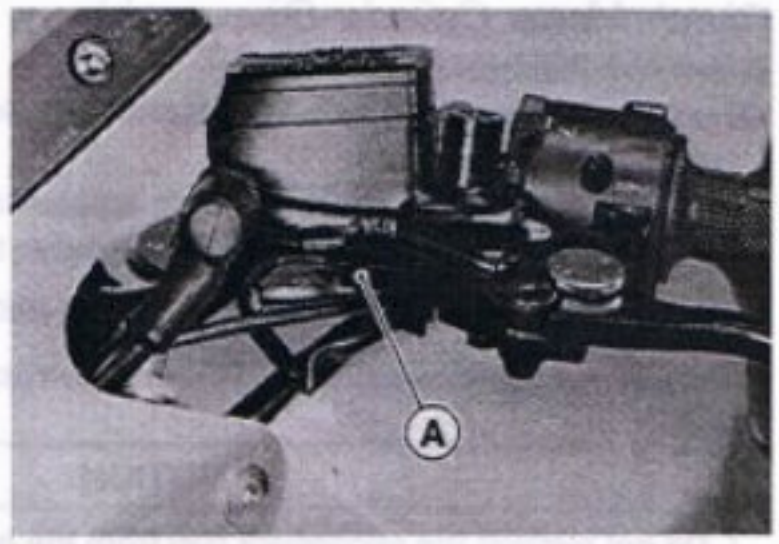

- Remove the banjo bolt [A] to disconnect the clutch hose from the master cylinder.
- Unscrew the clamp bolts [B], and take off the master cylinder [C] as an assembly with the clutch reservoir, clutch lever, and starter lockout switch installed.

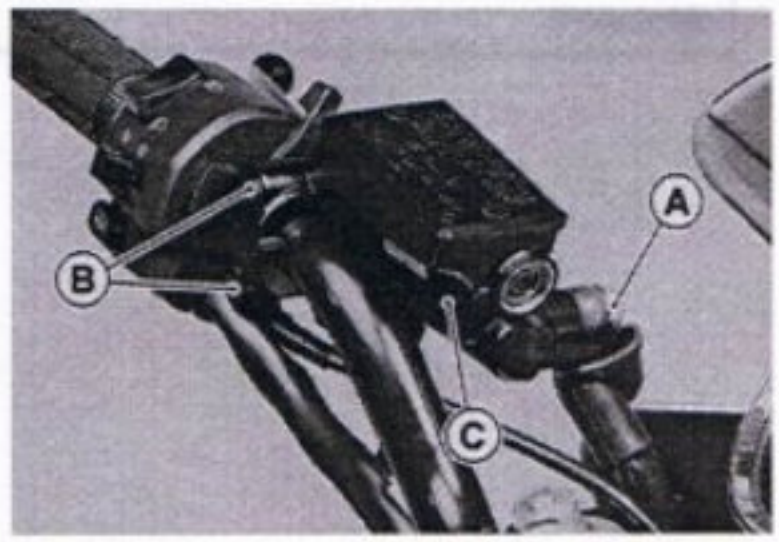

CAUTION
Clutch fluid quickly ruins painted surface; any spilled fluid should be completely washed away immediately.

Clutch Master Cylinder Installation

- Align the punch mark [A] on the handlebar with the mating surface [B] of the master cylinder clamp.

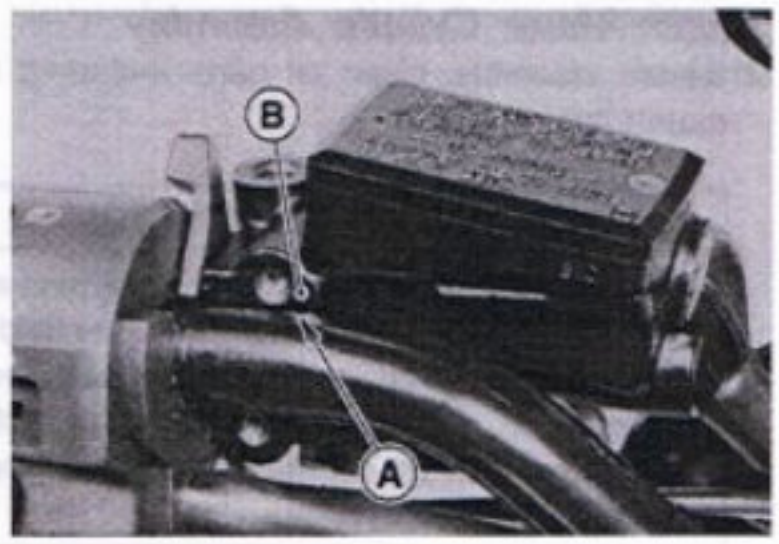

- The master cylinder clamp must be installed with the arrow mark [A] upward.
- Tighten the upper clamp bolt [B] first, and then the lower clamp bolt. There will be a gap at the lower part of the clamp after tightening.

  Torque – Master Cylinder Clamp Bolts : 8.8 N-m (0.90 kg-m, 78 in-lb)

- Replace the washers that are on each side of the hose fitting with new ones.
- Tighten the clutch hose banjo bolt.

  Torque – Clutch Hose Banjo Bolt: 25 N-m(2.5 kg-m, 18.0 ft-lb)

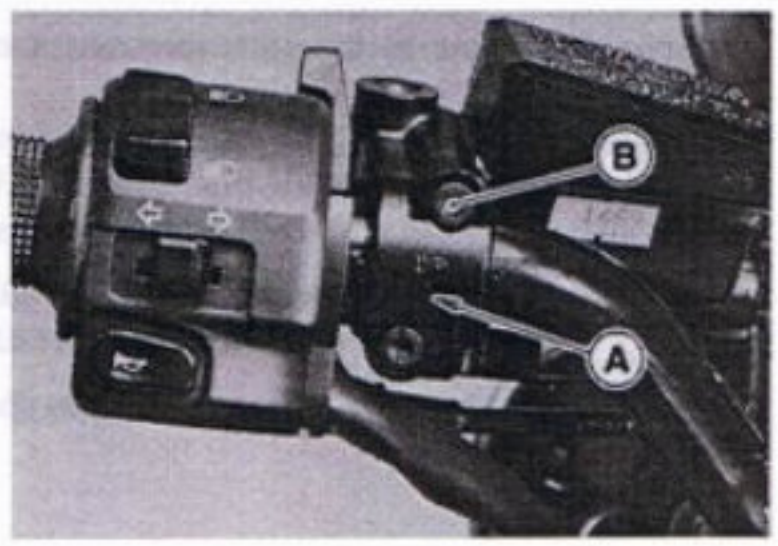

- Bleed the clutch line (see Bleeding the Clutch Line).
- Check that the clutch line has proper fluid pressure and no fluid leakage.

Clutch Master Cylinder Disassembly

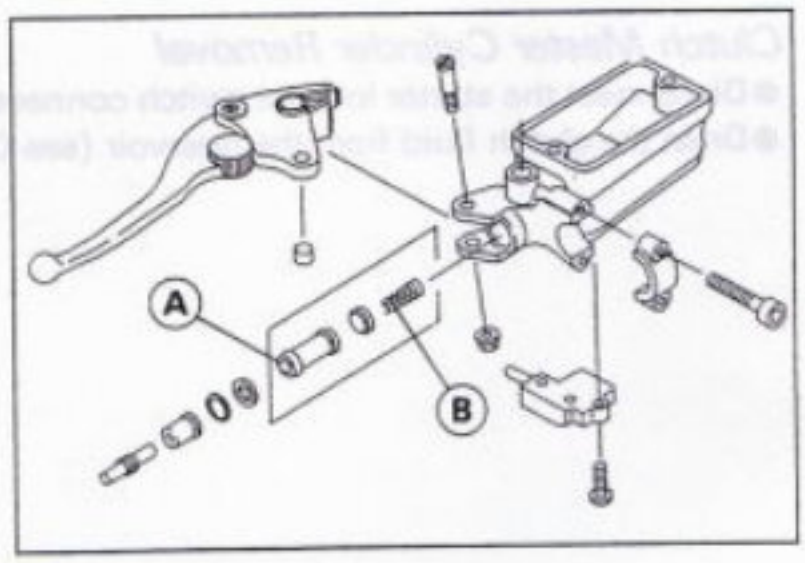

- Remove the master cylinder.
- Remove the reservoir cap and diaphragm, and pour the clutch fluid into a container.
- Unscrew the locknut and pivot bolt, and remove the clutch lever.
- Pull the dust cover out of place, and remove the circlip.

Special Tool – Inside Circlip Pliers: 57001-143

- Pull out the piston assembly [A] and return spring [B].

CAUTION
Do not remove the secondary cup from the piston since removal will damage it.

Clutch Master Cylinder Assembly

- Before assembly, clean all parts including the master cylinder with clutch fluid or alcohol.

CAUTION
Use only disc brake/clutch fluid, isopropyl alcohol, or ethyl alcohol, for cleaning parts. Do not use any other fluid for cleaning these parts. Gasoline, motor oil, or any other petroleum distillate will cause deterioration of the rubber parts. Oil spilled on any part will be difficult to wash off completely, and will eventually deteriorate the rubber used in the cylinder.

- Apply clutch fluid to the parts removed and to the inner wall of the cylinder.
- Take care not to scratch the piston or the inner wall of the cylinder.
- Install the push rod with the dust seal fitted into the groove.
  - ○ The push rod round end must be faced inwards.

Torque – Clutch Lever Pivot Bolt : 1.0 N-m (0.10 kg-m, 9 in-lb)
Clutch Lever Pivot Bolt Locknut : 5.9 N-m (0.60 kg-m, 52 in-lb)

- Install the clutch master cylinder (see this chapter).

Clutch Master Cylinder Inspection (Visual Inspection)

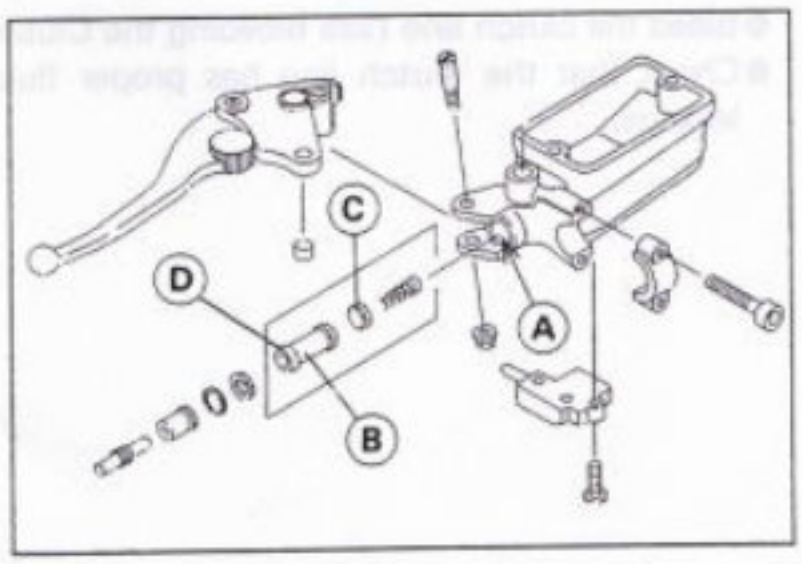

- Disassemble the clutch master cylinder.
- Check that there are no scratches, rust or pitting on the inside of the master cylinder [A] and on the outside of the piston [B].
- ★ If the mastery cylinder or piston shows any damage, replace them.
- Inspect the primary cup [C] and secondary cup [D].
- ★ If a cup is worn, damaged, softened (rotted), or swollen, the piston assembly should be replaced to renew the cups.
- If fluid leakage is noted at the clutch lever, the piston assembly should be replaced to renew the cups.
- Check the dust cover for damage.
- If it is damaged, replace it.

- Check that the relief and supply ports are not plugged.

★If the small relief port becomes plugged, the clutch will slip. Blow the ports clean with compressed air.

- Check the piston return spring for any damage.

★If the spring is damaged, replace it.

Clutch Slave Cylinder

Clutch Slave Cylinder Removal

● Remove:
Cover Bolts [A]
Clutch Slave Cylinder Cover [B]

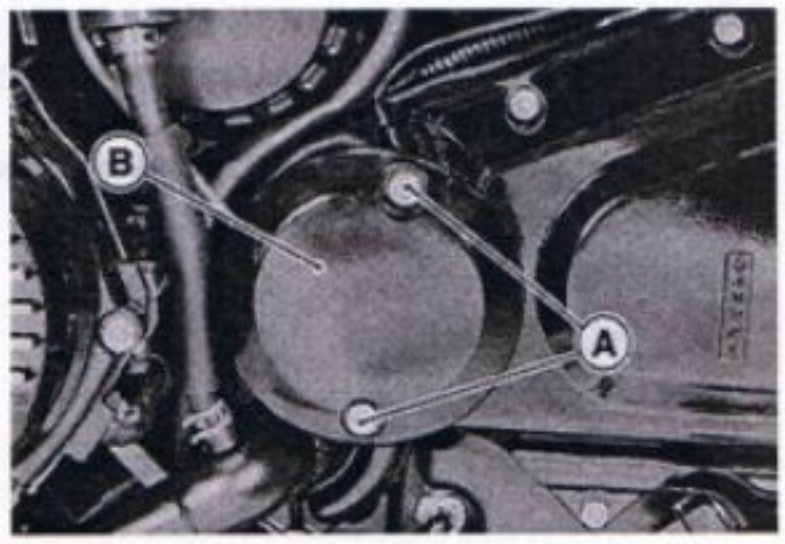

Banjo Bolt [A]
Clutch Slave Cylinder Bolts [B]
Slave Cylinder [C]

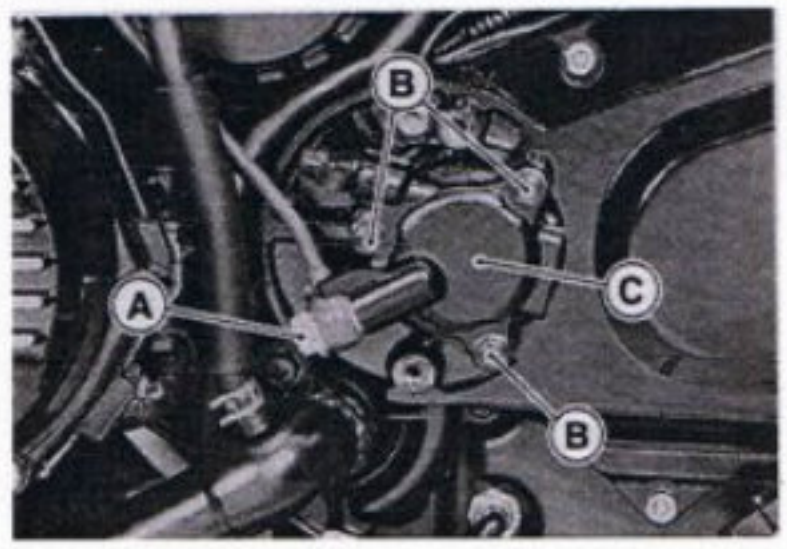

CAUTION

Immediately wash away any clutch fluid that spills. It may damage painted surfaces.

● Perform the following if the clutch slave cylinder is to be removed but not disassembled.

CAUTION

If the clutch salve cylinder is removed and left alone, the piston will be pushed out by the spring and the clutch fluid will drain out.

○ Remove the clutch slave cylinder from the engine with the pipe installed. Push [A] the piston into the cylinder as far as it will go.

○ Apply the clutch lever [A] slowly and hold it with a band [B].

NOTE

○ *Holding the clutch lever keeps the piston from coming out.*

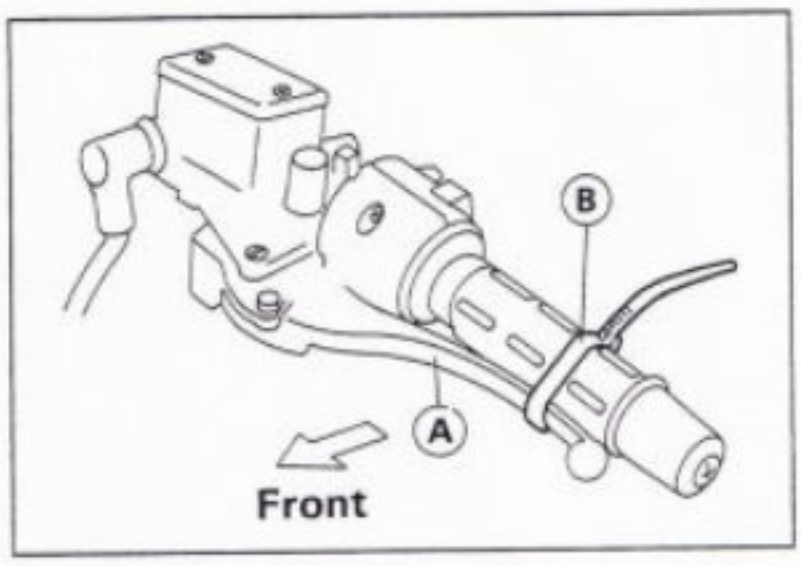

Clutch Slave Cylinder Installation

● Install the spacer [A] so that the stepped side [B] faces outward.

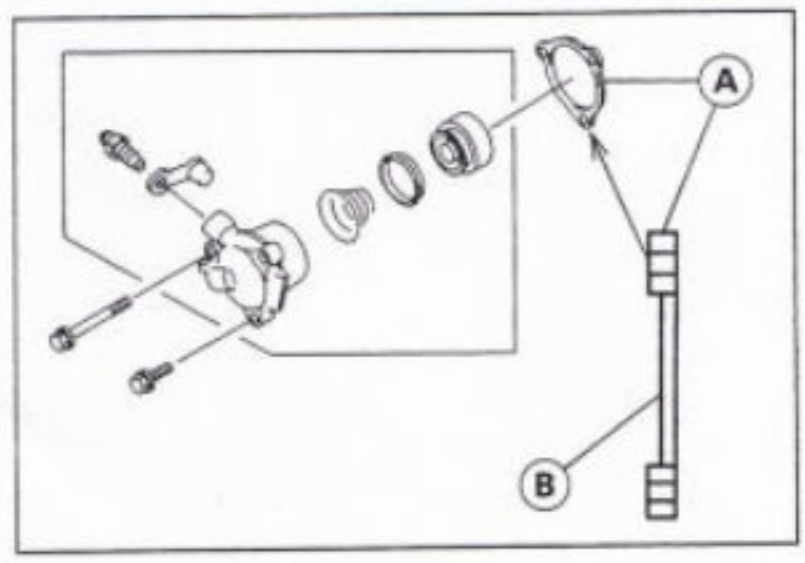

- Apply a non-permanent locking agent to the two slave cylinder bolts [A] shown.
- Replace the washers on each side of the clutch hose fitting with new ones.
- Tighten the banjo bolt to the specified torque.

Torque – Clutch Pipe Banjo Bolt : 25 N-m (2.5 kg-m, 18.0 ft-lb)

- Check the fluid level in the master cylinder reservoir, and bleed the sir in the clutch line.
- Check the clutch operation.

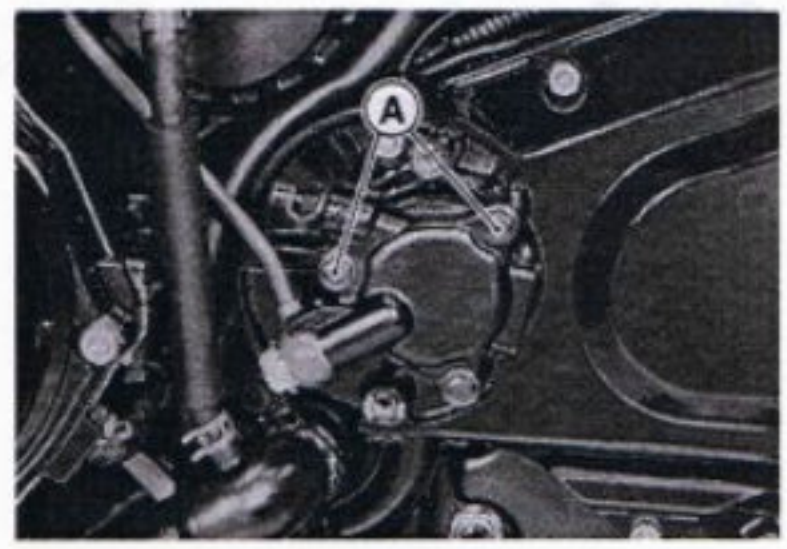

Clutch Slave Cylinder Disassembly

- Loosen the banjo bolt [A] at the clutch pipe lower end, and tighten it loosely.
- Unscrew the slave cylinder bolts [B] and detach the slave cylinder with the pipe installed from the engine.
- Pump the clutch lever until the piston comes out of the cylinder.
- Unscrew the banjo bolt and remove the slave cylinder.

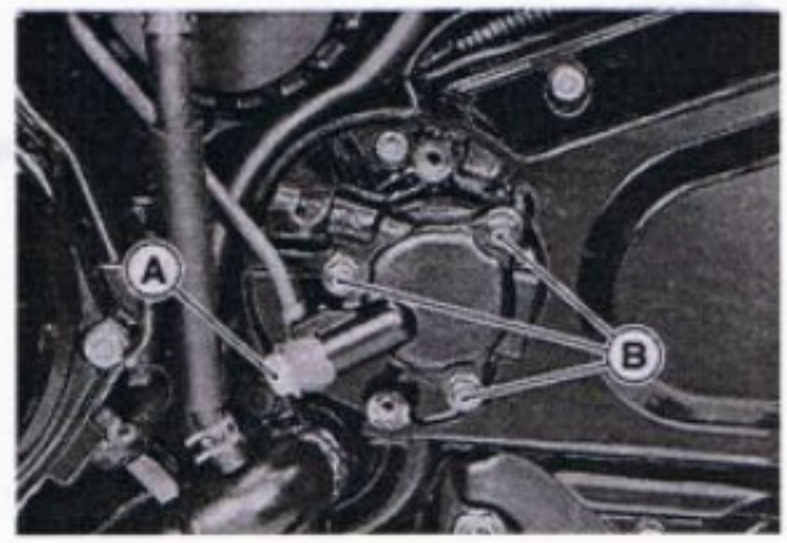

CAUTION
Immediately wash away any clutch fluid that spills. It may damage painted surfaces.

- Remove:
  Spring
  Fluid Seal

Clutch Slave Cylinder Assembly

CAUTION
Replace the fluid seal with a new one if it was removed from the piston.

- Apply clutch fluid to the outside of the piston and the fluid seal.
- Install the fluid seal as shown.
  Cylinder [A]
  Piston [B]
  Fluid Seal [C]
  Spring [D]

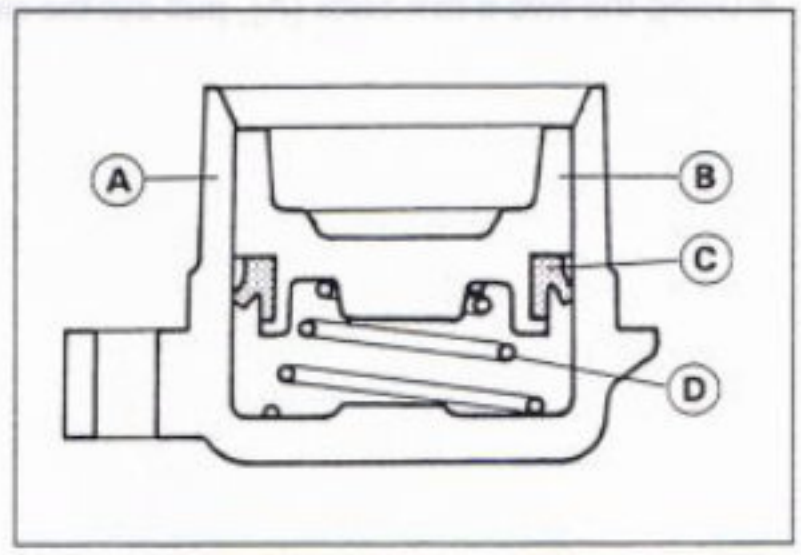

Clutch

Clutch Removal

- Drain the engine oil (see Engine Lubrication System chapter).
- Remove:
  Clutch Cover Bolts [A]
  Clutch Cover [B]

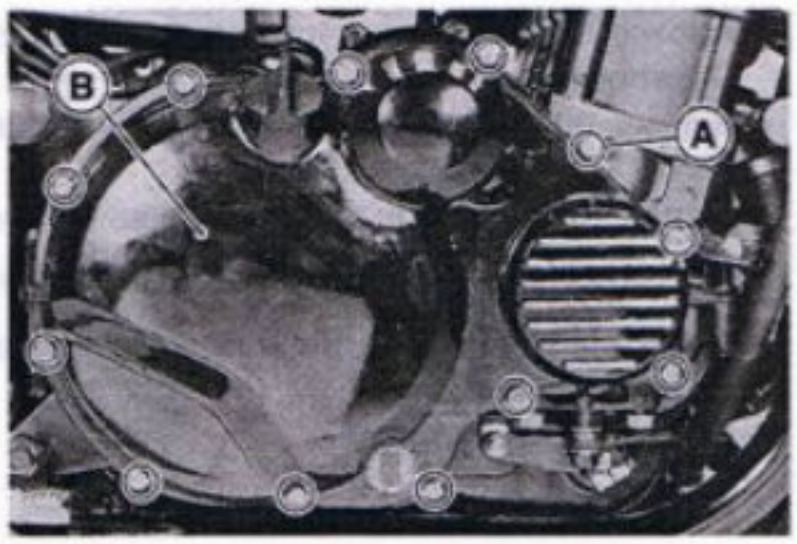

- Remove:
  Clutch Spring Bolts [A]
  Clutch Springs
  Clutch Spring Plate [B] (with thrust bearing and pusher).

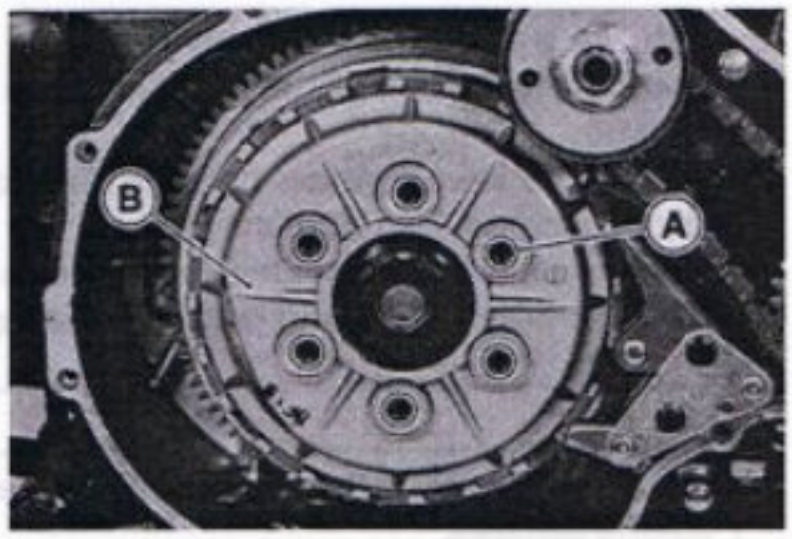

- Remove:
  Friction Plates, Steel Plates
  Clutch Hub Nut [A]
  - Holding the clutch hub [B], remove the nut.

  Special Tool – Clutch Holder: 57001-1243 [C]

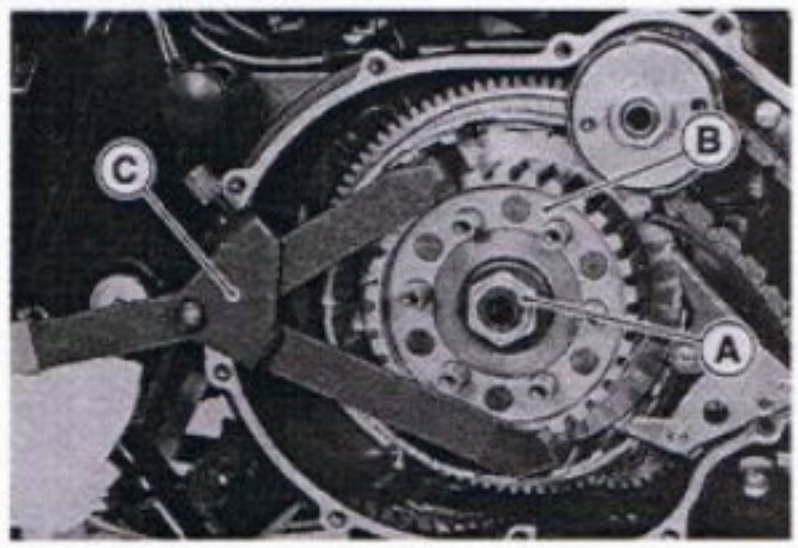

- Using the two 6 mm bolts [A], pull out the sleeve [B].

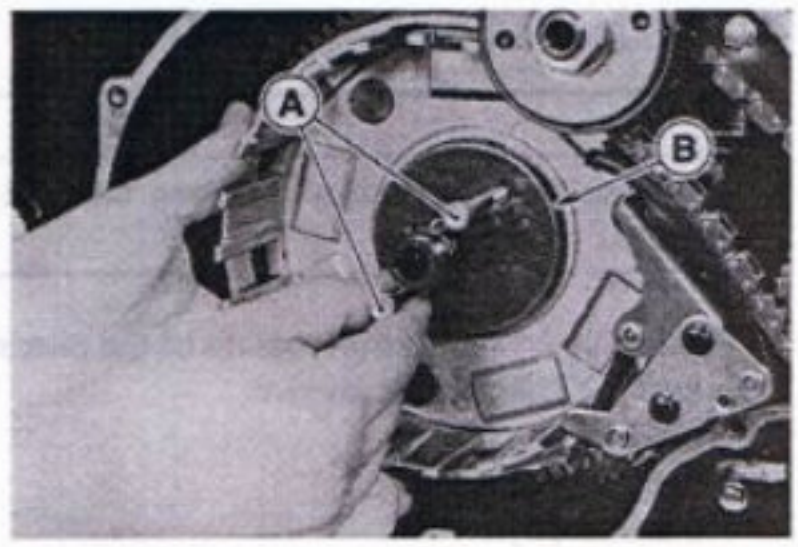

- Remove the clutch housing [A].

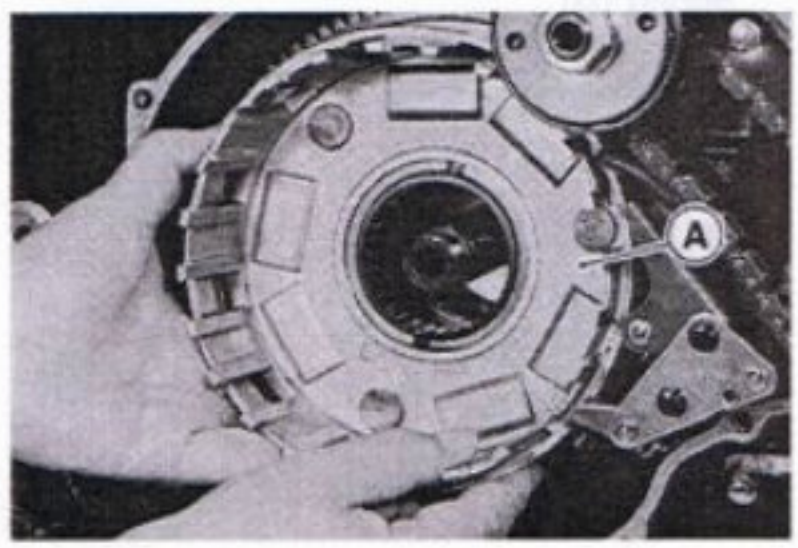

Clutch Installation

- Install the smaller spacer [A] first, then install the larger one [B].

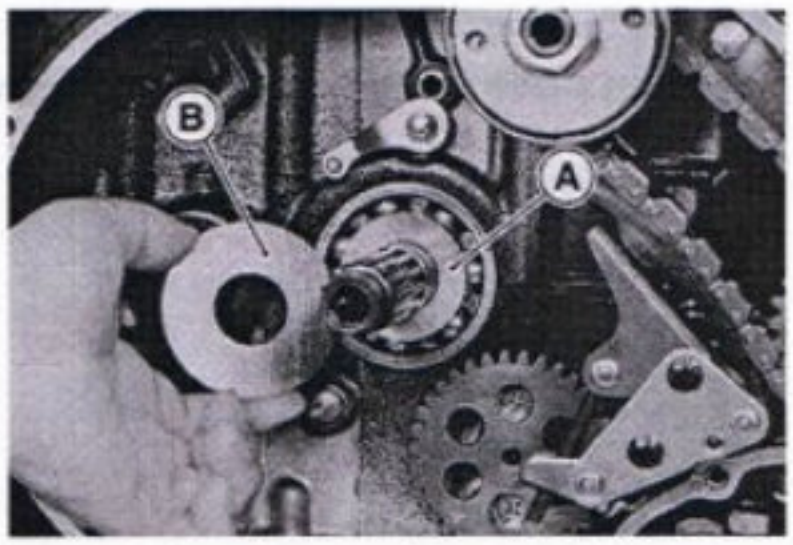

- Discard the used clutch hub nut, and install a new nut.
- Tighten the clutch hub nut [A], while holding the clutch hub with the clutch holder [B].

Special Tool – Clutch Holder: 57001-1243

Torque – Clutch Hub Nut: 130 N-m (13.5kg-m, 98 ft-lb)

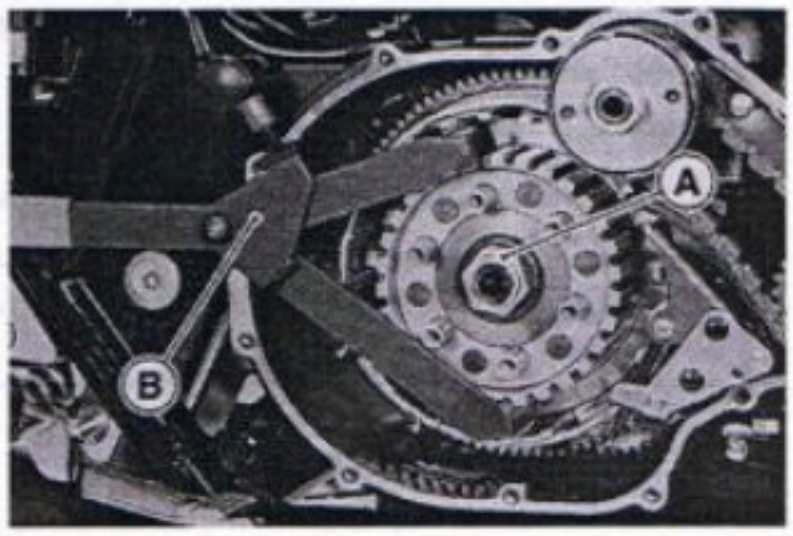

- Install the clutch plates and steel plates, starting with a friction plate of the cork base and alternating them.

CAUTION
If new dry friction plates and steel plates are installed, apply engine oil to the surfaces of each plate to avoid clutch plate seizure.

- Install the last friction plate [A] of the cork base in the shallower grooves as shown.

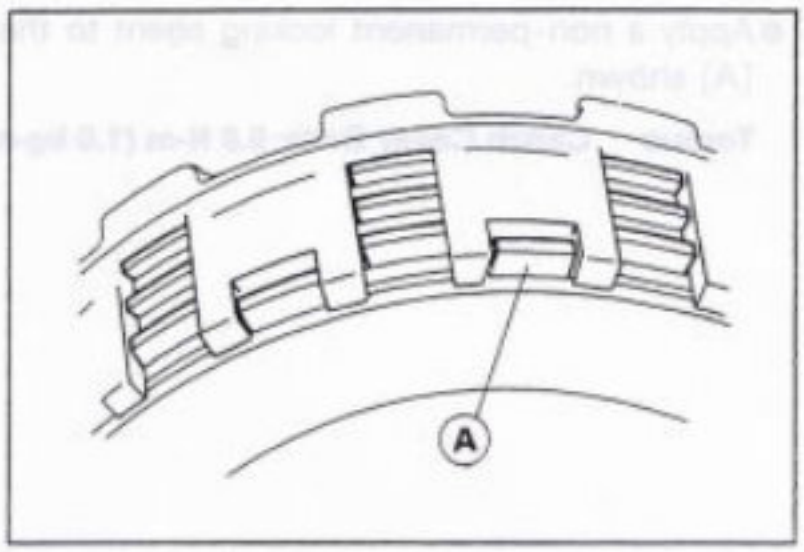

- Apply molybdenum disulfide grease to the push ends [A] and install the push rod and the thrust bearing [B].

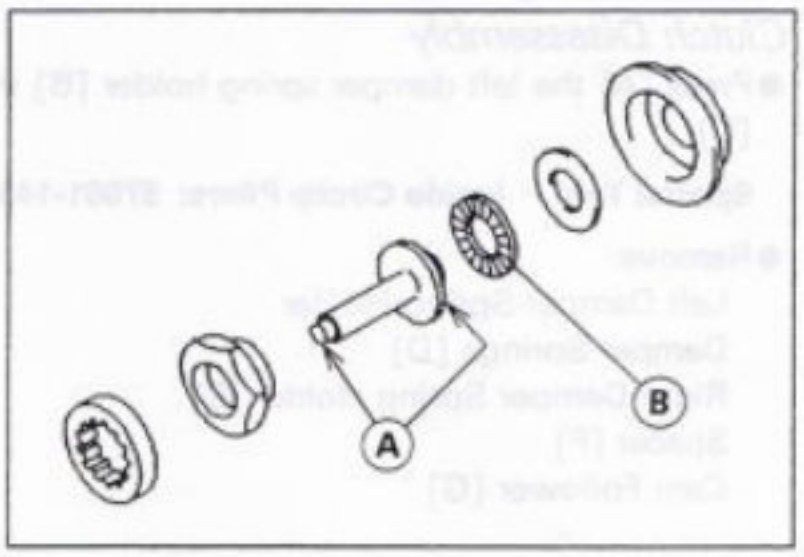

- Check that the clutch pusher [A] is in the retracted position.

★If not, push the spring plate [B] by hand.

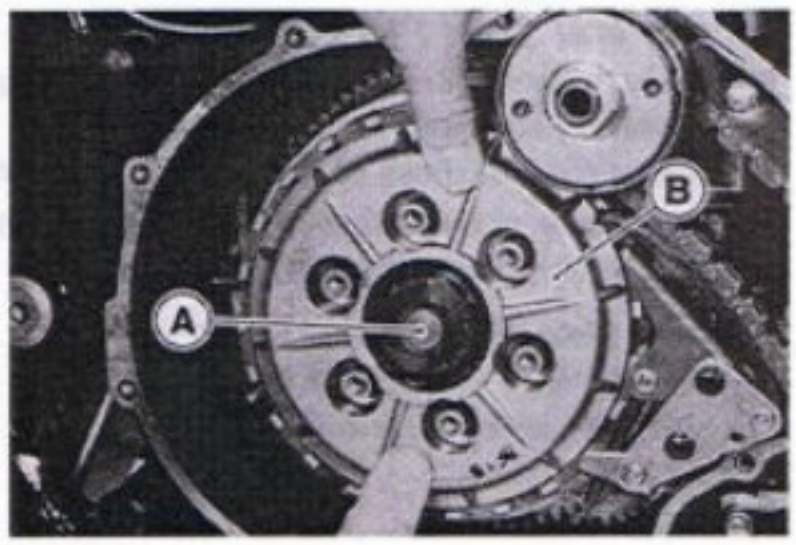

●Tighten the clutch spring bolts.

Torque – Clutch Spring Bolts : 11 N-m(1.1 kg-m, 95 in-lb)

●Apply silicone sealant to the crankcase halves mating surface[A] on the front and rear sides of the cover mount.

Sealant – Kawasaki Bond (Silicone Sealant): 56019-120

CAUTION
Do not apply silicone sealant to the area [B]. Because the hole is an oil passage.

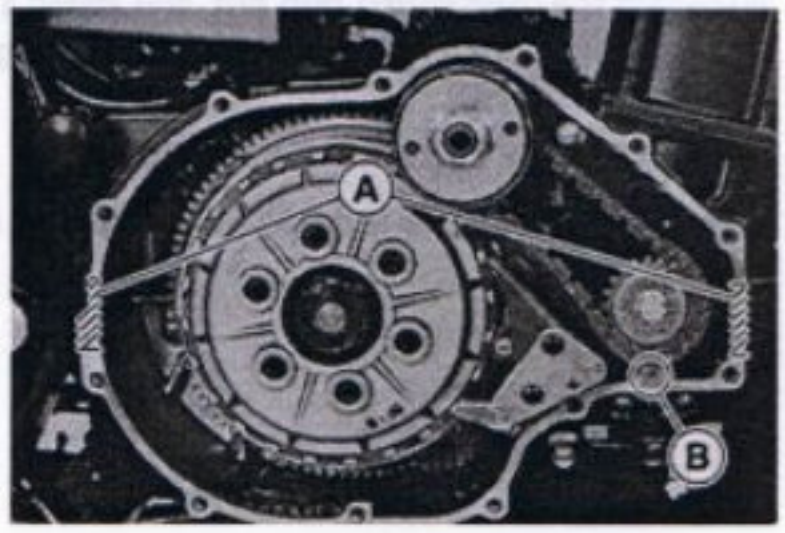

●Apply a non-permanent locking agent to the four clutch cover bolts [A] shown.

Torque – Clutch Cover Bolts: 9.8 N-m (1.0 kg-m, 87 in-lb)

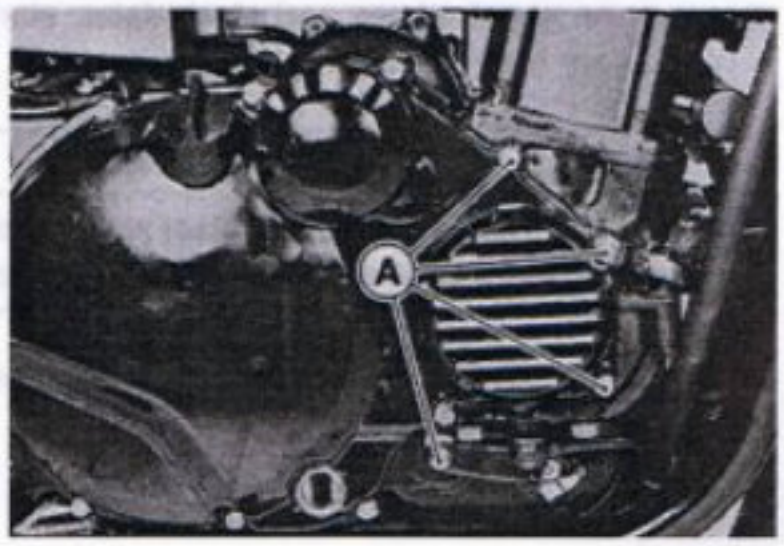

Clutch Disassembly

●Press [A] the left damper spring holder [B] in and remove the circlip [C].

Special Tool – Inside Circlip Pliers: 57001-143

●Remove:
Left Damper Spring Holder
Damper Springs [D]
Right Damper Spring Holder [E]
Spacer [F]
Cam Follower [G]

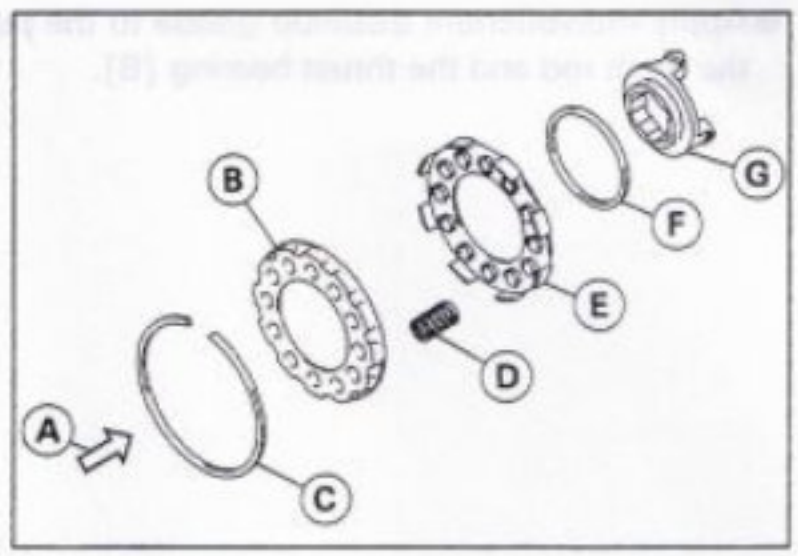

Friction and Steel Plate Damage, Wear

●Visually inspect the friction and steel plates for signs of seizure, overheating (discoloration), or uneven wear.

●Measure the thickness of the friction plates [A] at several points.

★If any plates show signs of damage, or if they have worn past the service limit, replace them with new ones.

Friction Plate Thickness
Standard: 2.9 ~ 3.1 mm
Service Limit: 2.8 mm

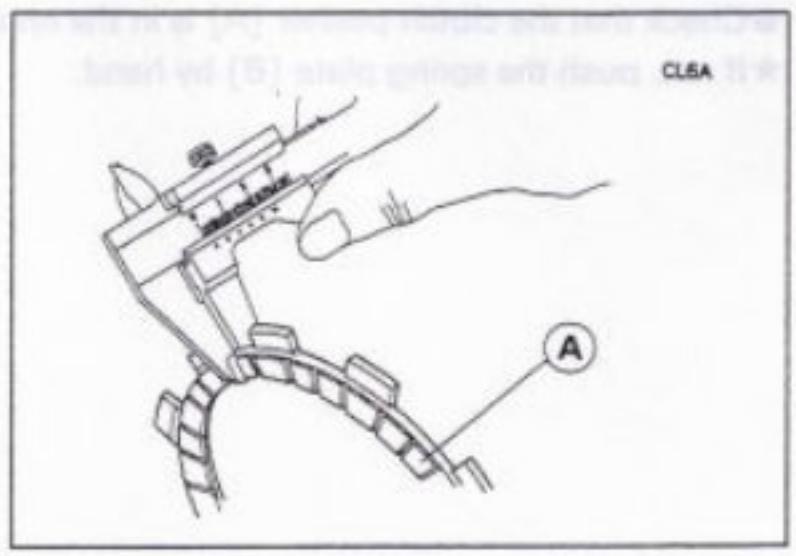

Friction and Steel Plate Warp

- Place each friction plate or steel plate on a surface plate, and measure the gap between the surface plate [A] and each friction plate or steel plate [B] with a thickness gauge [C]. The gap is the amount of friction or steel plate warp.

★If any plate is warped over the service limit, replace it with a new one.

Friction and Steel Plate Warp

Standard:	**0.2 mm or less**
Service Limit:	**0.3 mm**

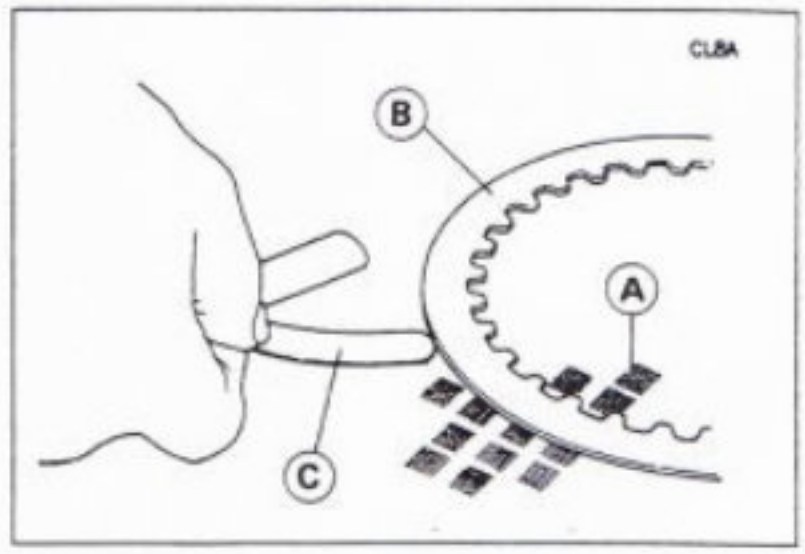

Clutch Spring Free Length Measurement

- Measure the free length of the clutch springs [A].

★If any spring is shorter than the service limit, it must be replaced.

Clutch Spring Free Length

Standard:	**33.2 mm**
Service Limit:	**32.1 mm**

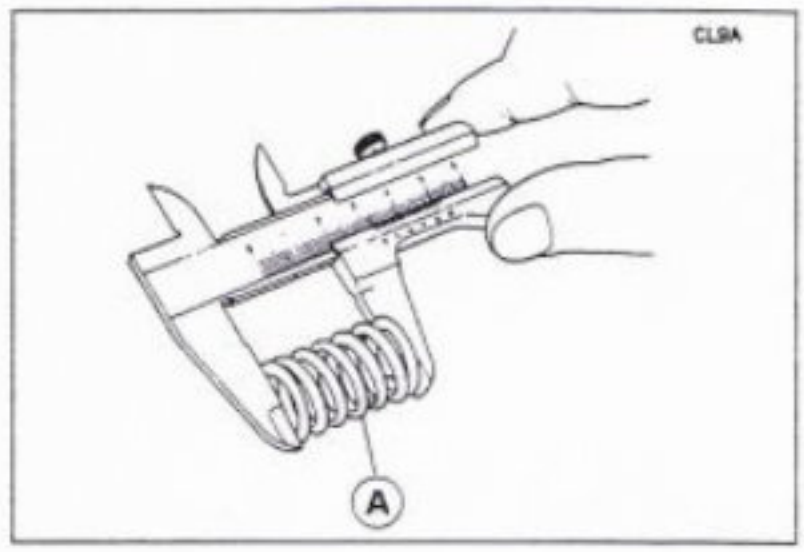

Clutch Housing Finger Damage

- Visually inspect the clutch housing fingers [A] where the friction plate tangs hit them.

★If they are badly worn or if there are groove cuts where the tangs hit, replace the housing. Also, replace the friction plates if their tangs are damaged.

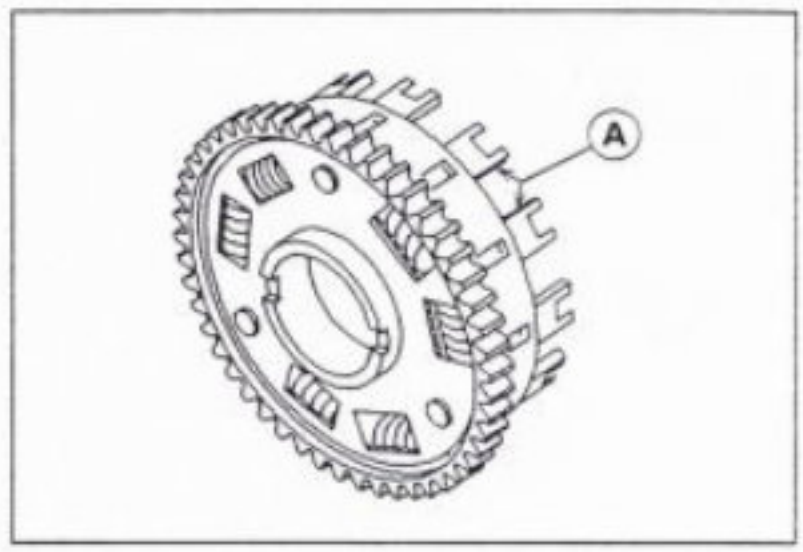

Clutch Hub Spline Damage

- Visually inspect where the teeth on the steel plates wear against the clutch hub splines.

★If there are notches worn into the clutch hub splines [A], replace the clutch hub. Also, replace the steel plates if their teeth are damaged.

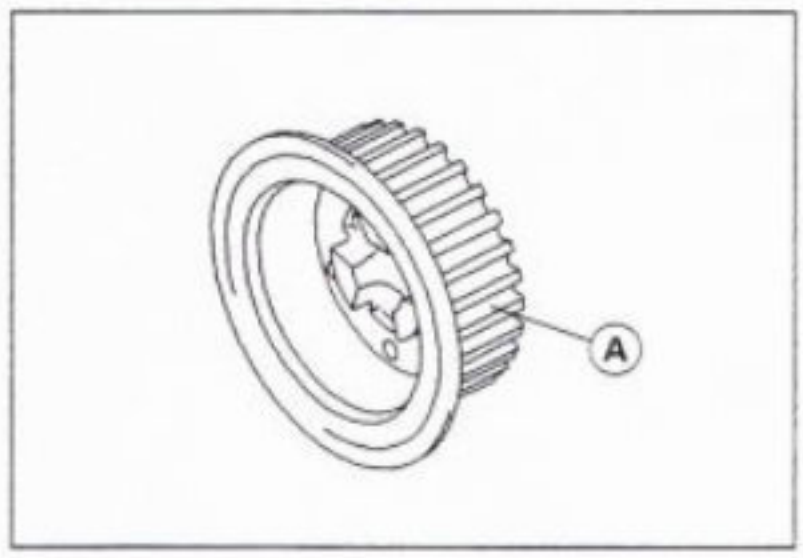

Cam Damper Inspection

- Disassemble the clutch (see this chapter).
- Visually inspect the damper cam[A], damper springs [B], and cam follower [C].

★Replace any part that appears damaged.

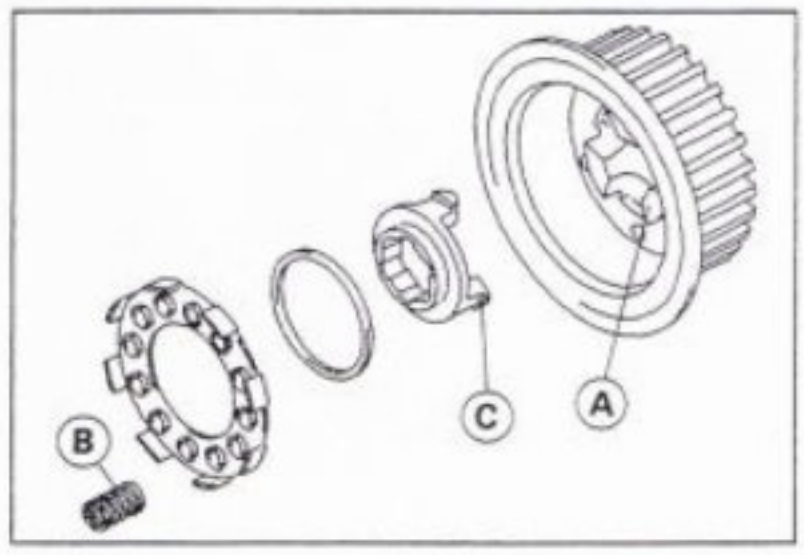

Engine Lubrication System

Table of Contents

Exploded View 6-2
Engine Oil Flow Chart 6-4
Specifications 6-6
Engine Oil and Oil Filter 6-7
  Oil Level Inspection 6-7
  Engine Oil Change 6-7
  Oil Filter Change 6-8
Oil Pan 6-9
  Oil Pan Removal 6-9
  Oil Pan Installation 6-9
Oil Pump and Relief Valve 6-11
  Oil Pump and Relief Valve Removal 6-11
  Oil Pump and Relief Valve Installation 6-11
  Oil Pump Disassembly 6-12
  Oil Pump Assembly 6-12
  Oil Pump Inspection 6-12
  Oil Pump Gear Removal 6-13
  Oil Pump Gear Installation 6-13
  Relief Valve Inspection 6-13
Oil Pressure 6-14
  Oil Pressure Measurement 6-14

Exploded View

1. Small hole faces down.
L: Apply a non-permanent locking agent.
R: Replacement Parts
SS: Apply silicone sealant.
T1: 12 N-m (1.2 kg-m, 104 in-lb)
T2: 15 N-m (1.5 kg-m, 11.0 ft-lb)
T3: 18 N-m (1.8 kg-m, 13.0 ft-lb)
T4: 20 N-m (2.0 kg-m, 14.5 ft-lb)
T5: 25 N-m (2.5 kg-m, 18.0 ft-lb)
T6: 5.4 N-m (0.55 kg-m, 48 in-lb)
T7: 34 N-m (3.5 kg-m, 25 ft-lb)
T8: 9.8 N-m (1.0 kg-m, 87 in-lb)
T9: 1.5 N-m (0.15 kg-m, 13 in-lb)
T10: 1.5 N-m (0.15 kg-m, 13 in-lb) or Hand-Tight

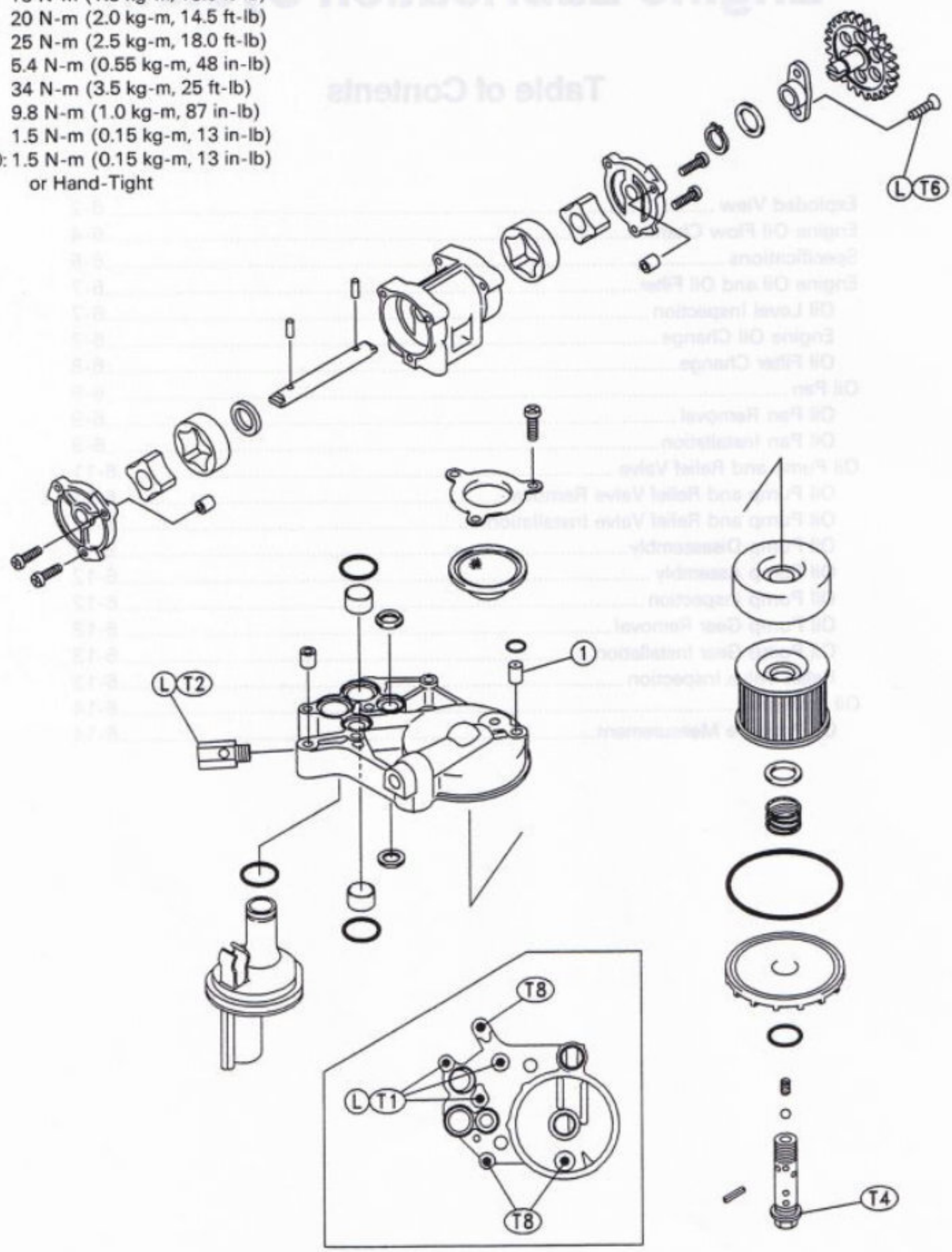

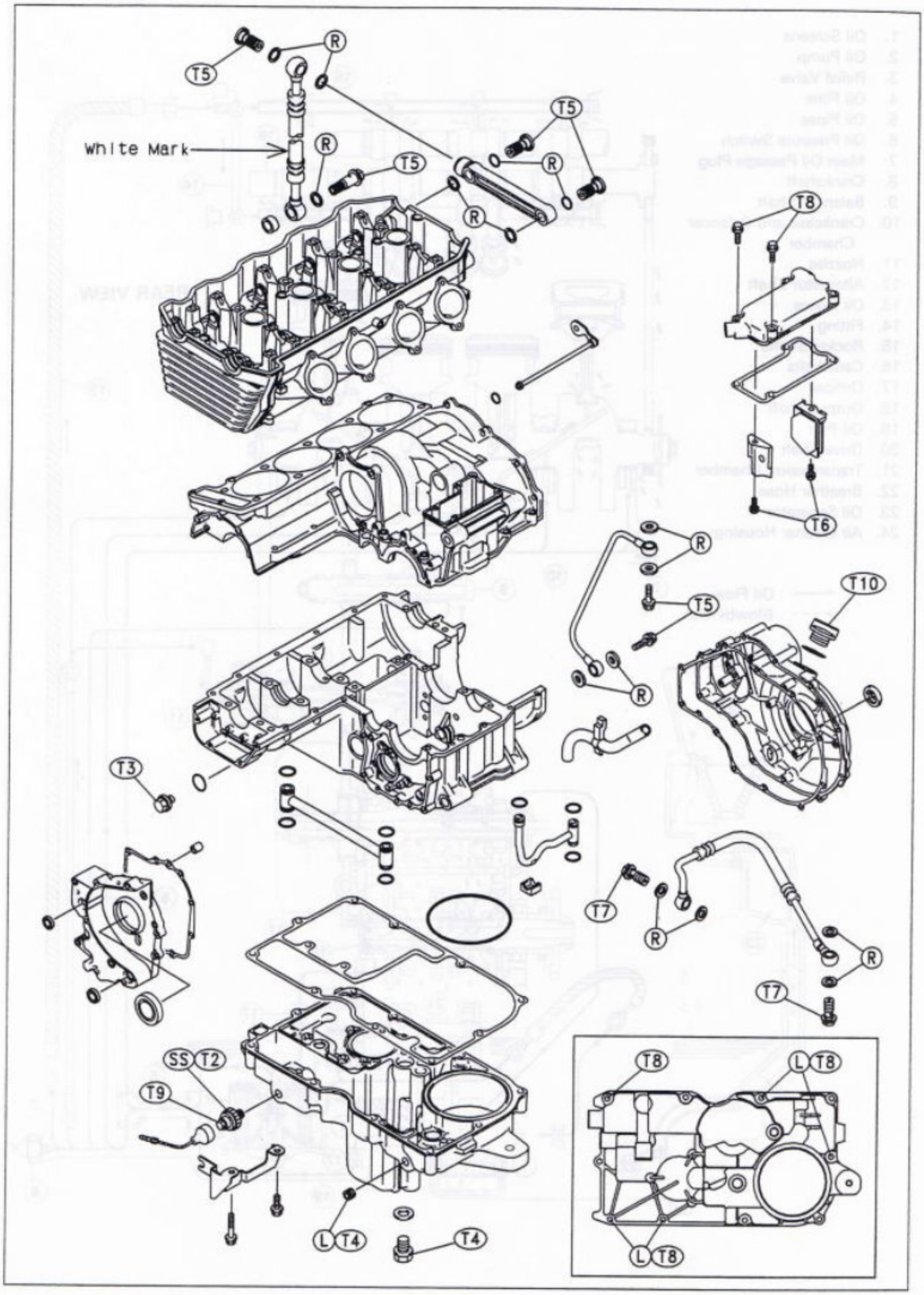
T5
R
White Mark
T5
R
T5
R
R
T8
T6
R
T5
T10
R
T3
T7
R
R
T7
SS
T2
T9
L
T4
T4
T8
L
T8
L
T8

Engine Oil Flow Chart

1. Oil Screens
2. Oil Pump
3. Relief Valve
4. Oil Filter
5. Oil Pipes
6. Oil Pressure Switch
7. Main Oil Passage Plug
8. Crankshaft
9. Balancer Shaft
10. Crankcase and Balancer Chamber
11. Nozzles
12. Alternator Shaft
13. Oil Hoses
14. Fitting
15. Rocker Shafts
16. Camshafts
17. Orifices
18. Output Shaft
19. Oil Pan
20. Drive Shaft
21. Transmission Chamber
22. Breather Hose
23. Oil Separator
24. Air Cleaner Housing

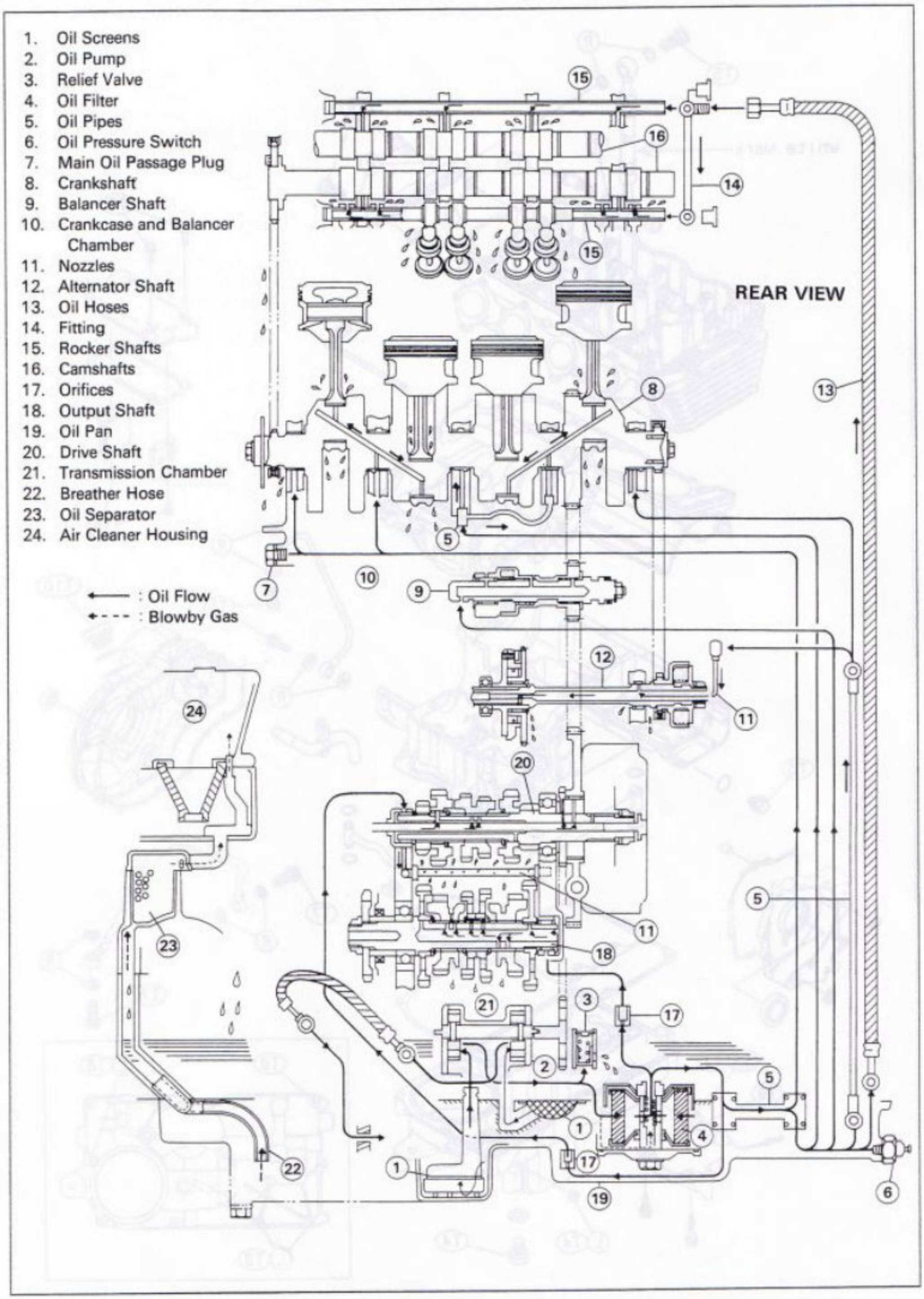

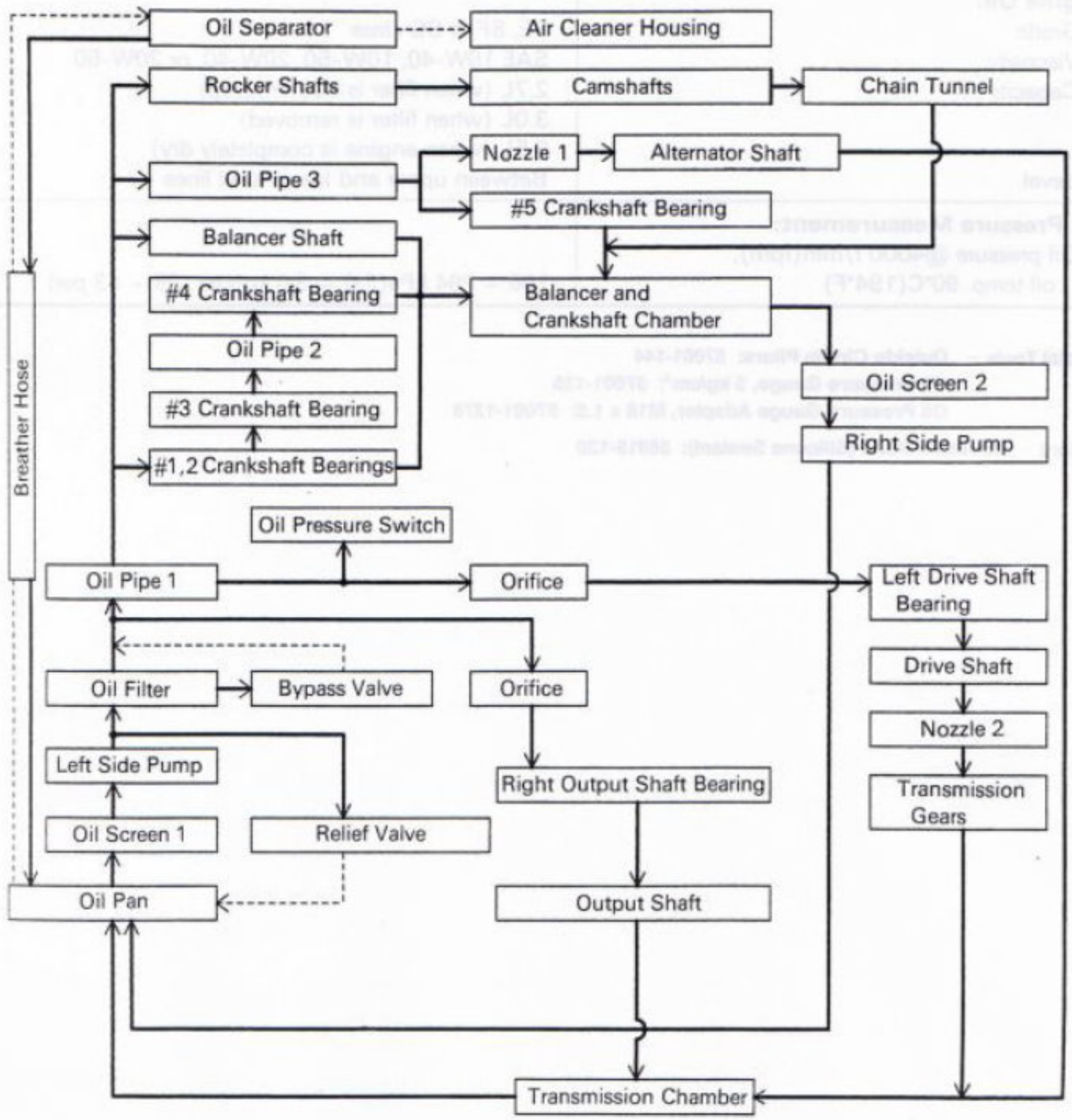
Oil Separator
Air Cleaner Housing
Rocker Shafts
Camshafts
Chain Tunnel
Nozzle 1
Alternator Shaft
Oil Pipe 3
#5 Crankshaft Bearing
Balancer Shaft
#4 Crankshaft Bearing
Balancer and Crankshaft Chamber
Oil Pipe 2
Oil Screen 2
#3 Crankshaft Bearing
Right Side Pump
#1,2 Crankshaft Bearings
Breather Hose
Oil Pressure Switch
Oil Pipe 1
Orifice
Left Drive Shaft Bearing
Drive Shaft
Oil Filter
Bypass Valve
Orifice
Nozzle 2
Left Side Pump
Right Output Shaft Bearing
Transmission Gears
Oil Screen 1
Relief Valve
Oil Pan
Output Shaft
Transmission Chamber

Specifications

Item	Standard
Engine Oil:	
Grade	SE, SF or SG class
Viscosity	SAE 10W-40, 10W-50, 20W-40, or 20W-50
Capacity	2.7L (when filter is not removed) 3.0L (when filter is removed) 3.5L (when engine is completely dry)
Level	Between upper and lower level lines
Oil Pressure Measurement:	
Oil pressure @4000 r/min(rpm), oil temp. 90°C(194°F)	196 ~ 294 kPa(2.0 ~ 3.0 kg/cm², 28 ~ 43 psi)

Special Tools – **Outside Circlip Pliers: 57001-144**
Oil Pressure Gauge, 5 kg/cm²: 57001-125
Oil Pressure Gauge Adapter, M18 x 1.5: 57001-1278

Sealant – **Kawasaki Bond (Silicone Sealant): 56019-120**

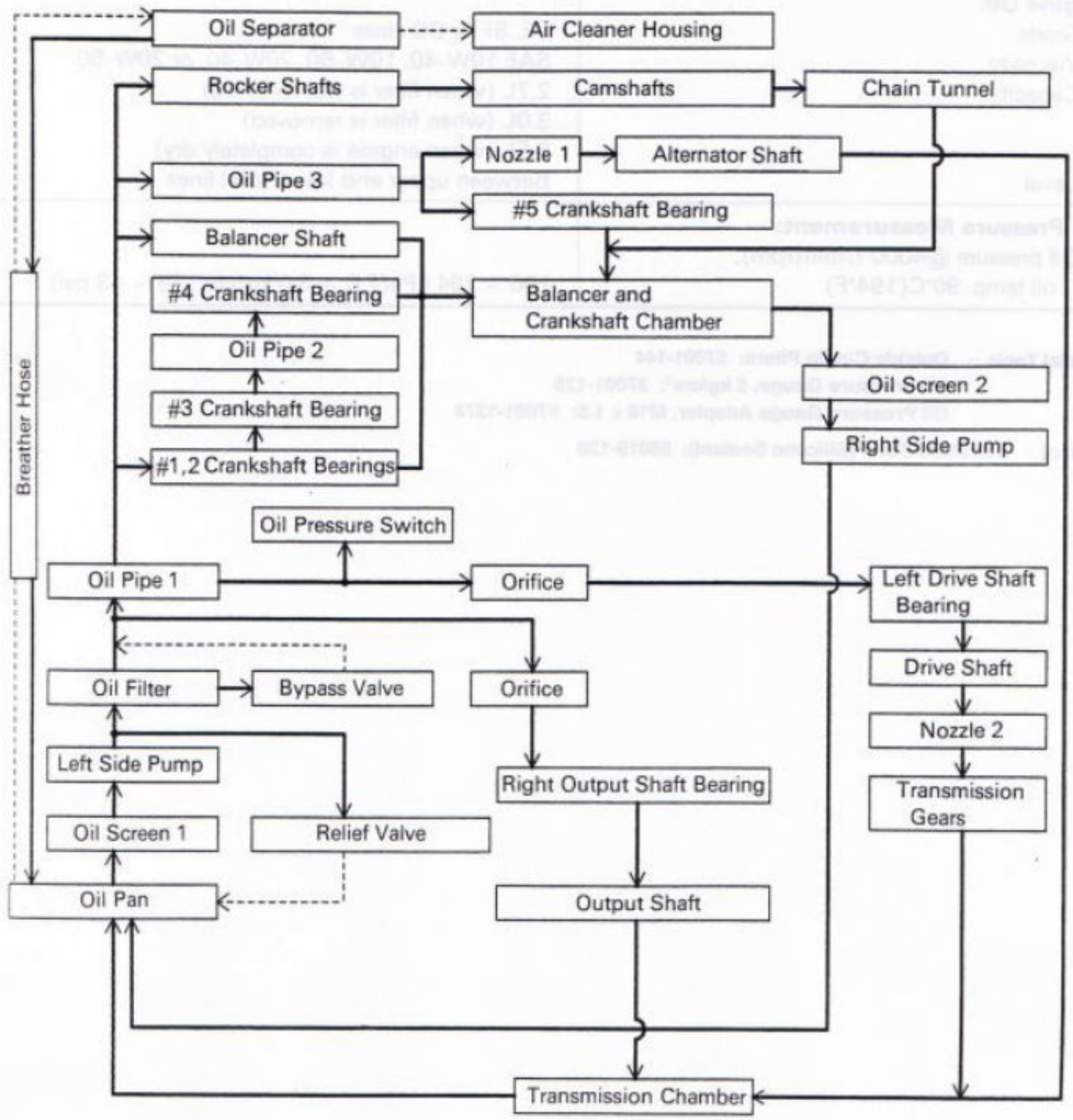
Oil Separator
Air Cleaner Housing
Rocker Shafts
Camshafts
Chain Tunnel
Nozzle 1
Alternator Shaft
Oil Pipe 3
#5 Crankshaft Bearing
Balancer Shaft
#4 Crankshaft Bearing
Balancer and Crankshaft Chamber
Oil Pipe 2
Oil Screen 2
#3 Crankshaft Bearing
Right Side Pump
#1,2 Crankshaft Bearings
Breather Hose
Oil Pressure Switch
Oil Pipe 1
Orifice
Left Drive Shaft Bearing
Drive Shaft
Oil Filter
Bypass Valve
Orifice
Nozzle 2
Left Side Pump
Right Output Shaft Bearing
Transmission Gears
Oil Screen 1
Relief Valve
Oil Pan
Output Shaft
Transmission Chamber

Specifications

Item	Standard
Engine Oil:	
Grade	SE, SF or SG class
Viscosity	SAE 10W-40, 10W-50, 20W-40, or 20W-50
Capacity	2.7L (when filter is not removed)
	3.0L (when filter is removed)
	3.5L (when engine is completely dry)
Level	Between upper and lower level lines
Oil Pressure Measurement:	
Oil pressure @4000 r/min(rpm), oil temp. 90°C(194°F)	196 ~ 294 kPa(2.0 ~ 3.0 kg/cm², 28 ~ 43 psi)

Special Tools – **Outside Circlip Pliers: 57001-144**
Oil Pressure Gauge, 5 kg/cm²: 57001-125
Oil Pressure Gauge Adapter, M18 x 1.5: 57001-1278

Sealant – **Kawasaki Bond (Silicone Sealant): 56019-120**

Engine Oil and Oil Filter

⚠WARNING

Motorcycle operation with insufficient, deteriorated, or contaminated engine oil will cause accelerated wear and may result in engine or transmission seizure, accident, and injury.

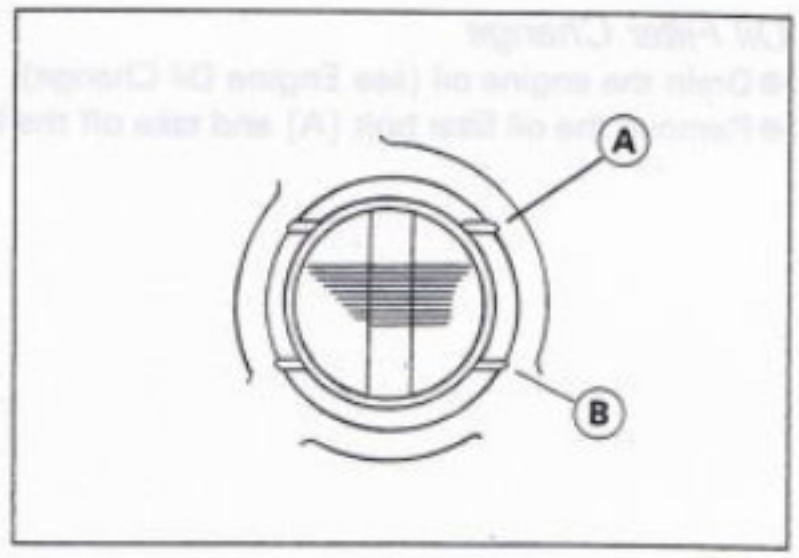

Oil Level Inspection

- Situate the motorcycle so that it is vertical.
- Check that the engine oil level is between the upper[A] and lower [B] levels in the gauge.

NOTE

○ *Situate the motorcycle so that it is perpendicular to the ground.*
○ *If the motorcycle has just been used, wait several minutes for all the oil to drain down.*
○ *If the oil has just been changed, start the engine and run it for several minutes at idle speed. This fills the oil filter with oil. Stop the engine, then wait several minutes until the oil settles.*

CAUTION

Racing the engine before the oil reaches every part can cause engine seizure.
If the engine oil gets extremely low or if the oil pump or oil passages clog up or otherwise do not function properly, the oil pressure warning light will light. If this light stays on when the engine is running above idle speed, stop the engine immediately and find the cause.

Engine Oil Change

- Situate the motorcycle so that it is vertical after warming up the engine.
- Remove the engine drain plug [A] and drain the oil.

○ The oil in the filter can be drained by removing the oil filter [B] (see Oil Filter Change).

★ Replace the drain plug gasket with a new one if it is damaged.

- Tighten:

Torque – Engine Drain Plug : 20 N-m (2.0 kg-m, 14.5 ft-lb)
Oil Filter Bolt : 20 N-m (2.0 kg-m, 14.5 ft-lb)

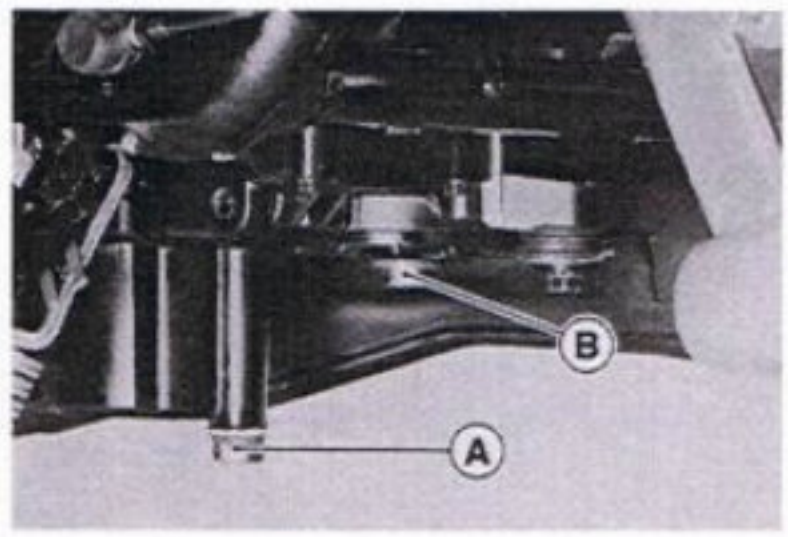

- Pour in the specified type and amount of oil.

Engine Oil

Grade:	**SE, SF, or SG class**
Viscosity:	**SAE 10W-40, 10W-50, 20W-40, or 20W-50**
Amount:	**2.7 L (when filter is not removed)**
	3.0 L (when filter is removed)
	3.5 L (when engine is completely dry)

Oil Filter Change

- Drain the engine oil (see Engine Oil Change).
- Remove the oil filter bolt [A] and take off the filter assembly.

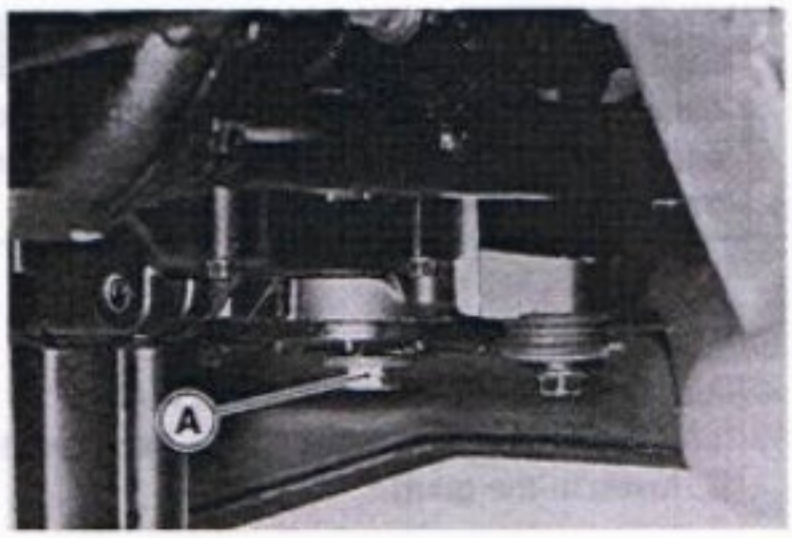

NOTE

○ *The oil filter bypass valve is assembled in the filter bolt.*

Filter Bolt [A]
O-ring [B]
Filter Cover [C]
Oil Fence [D]
Spring [E]
Washer [F]
Filter [G]

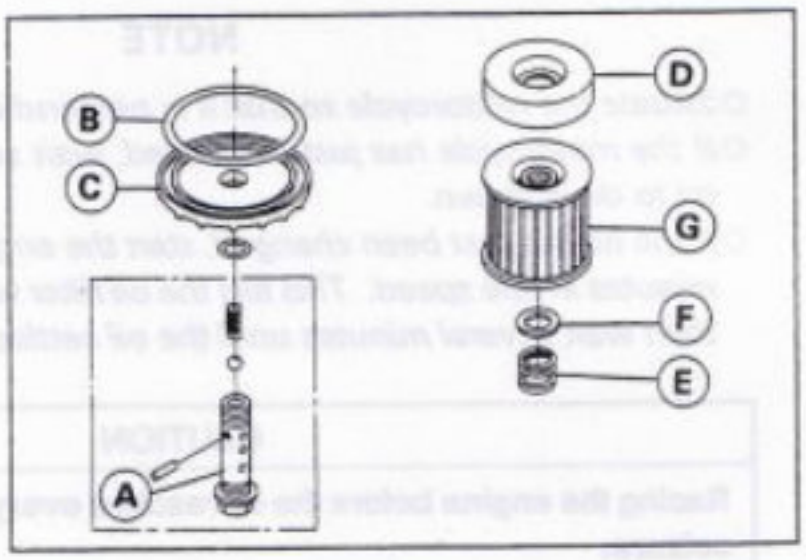

- Replace the filter with a new one.
- Apply oil to the filter bolt [A], turn [B] the filter or the filter bolt to work the filter into place. Be careful that the filter grommets [C] do not slip out of place.
- Tighten the filter bolt.

  Torque – Oil Filter Bolt: 20 N-m (2.0 kg-m, 14.5 ft-lb)

- Pour in the specified type and amount of oil (see Engine Oil Change).

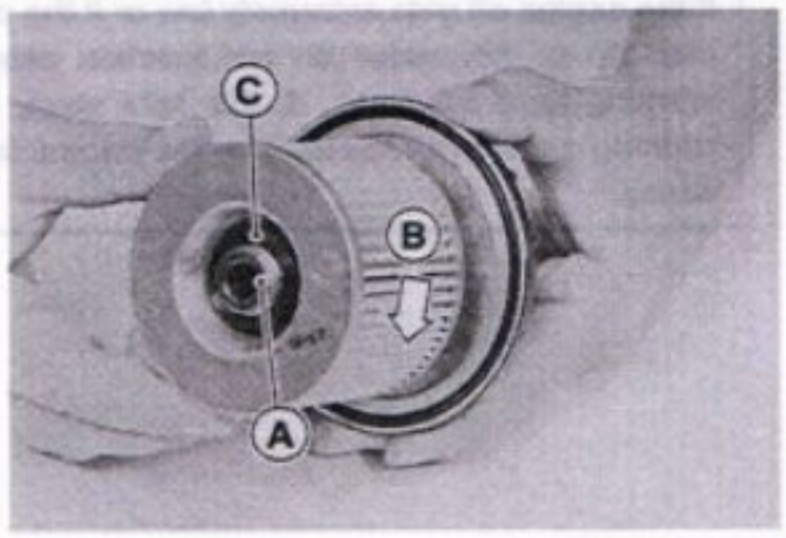

Oil Pan

Oil Pan Removal

- Drain:
  - Coolant (see Cooling System chapter)
  - Engine Oil (see Oil Change)
- Remove:
  - Radiator (see Cooling System chapter)
  - Muffler (see Engine Top End chapter)
  - Oil Pipe [A]
  - Oil Hoses [B]
  - Oil Switch Lead Connector
  - Oil Filter
- Remove the oil pan bolts and take off the oil pan.

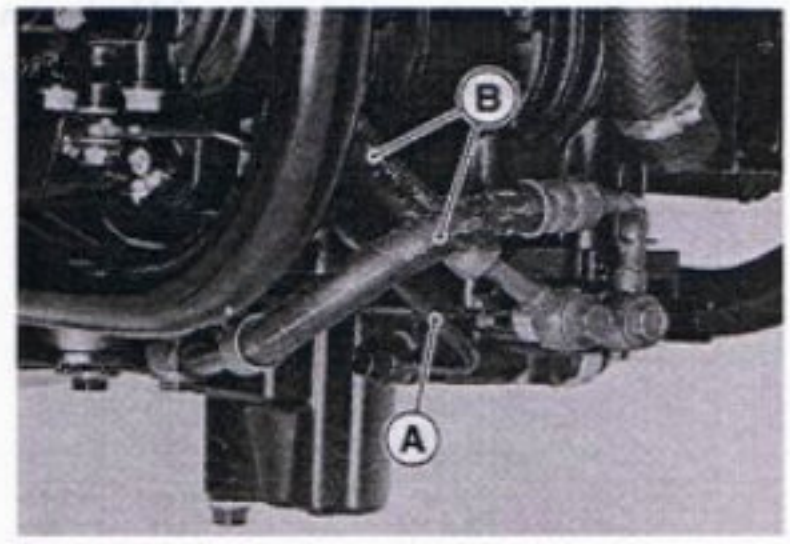

Oil Pan Installation

- Use a new flat washer on each side of the oil hose or oil pipe banjo bolt.
- Replace the gasket with a new one.
- Replace the O-rings of the oil pipes [A] and the oil pump bracket [B] with new ones.
- ○ Install the outlet side O-ring [C] with the flat side facing to the bracket.

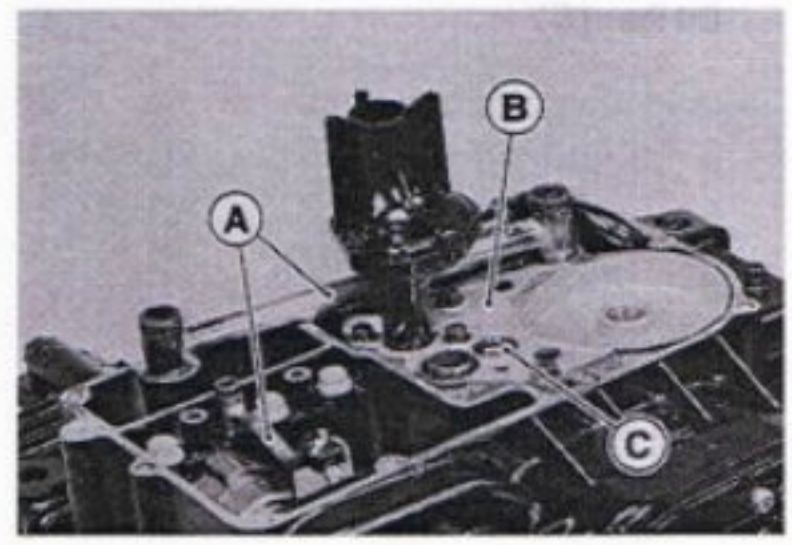

- Replace the O-ring [A] in the oil pan.

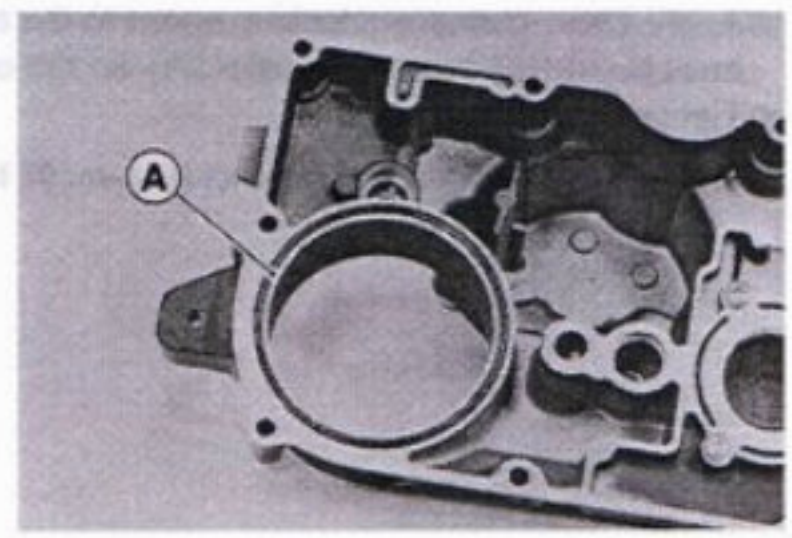

- Clean the oil screens [A] with high-flash point solvent and remove any particles stuck to it.

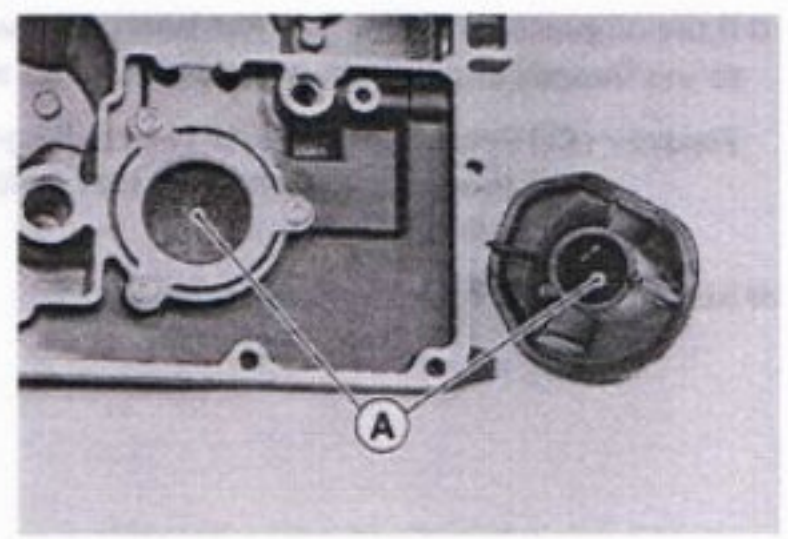

⚠WARNING

Clean the screens in a well-ventilated area, and take care that there is no spark or flame anywhere near the working area. Because of the danger of highly flammable liquids, do not use gasoline or low-flash point solvents.

NOTE

- ○ *While cleaning the screens, check for any metal particles that might indicate internal engine damage.*

- Check the screens carefully for any damage: holes and broken wires.
- ★ If the screen is damaged, replace it.

●Apply silicone sealant to the areas [A] shown.

Sealant – Kawasaki Bond (Silicone Sealant): 56019-120

Lower Crankcase [B]

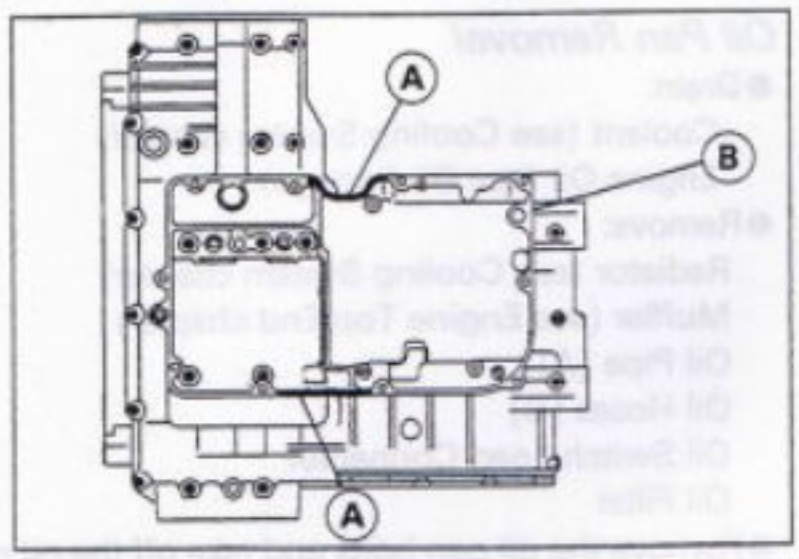

Oil Pan [C]

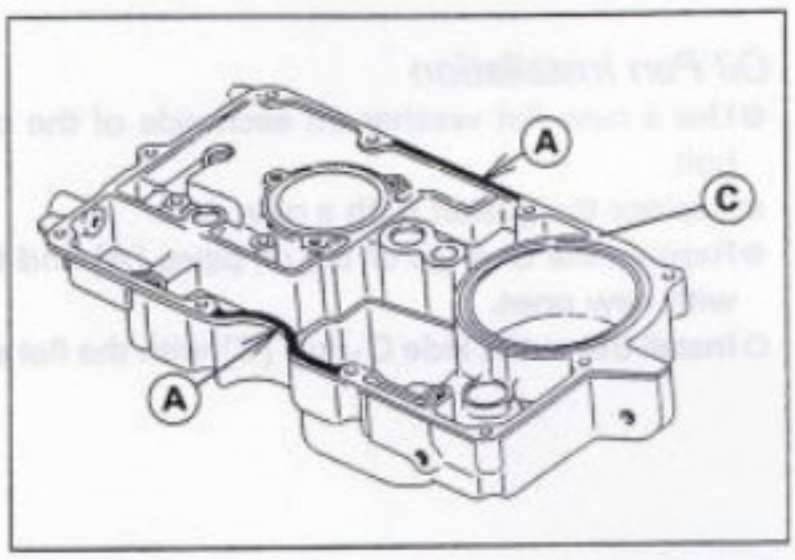

●Apply a non-permanent locking agent to the threads of the four oil pan bolts beside the triangular marks [A] on the oil pan.

●Tighten the oil pan bolts.

Torque – Oil Pan Bolts: 9.8 N-m(1.0 kg-m, 87 in-lb)

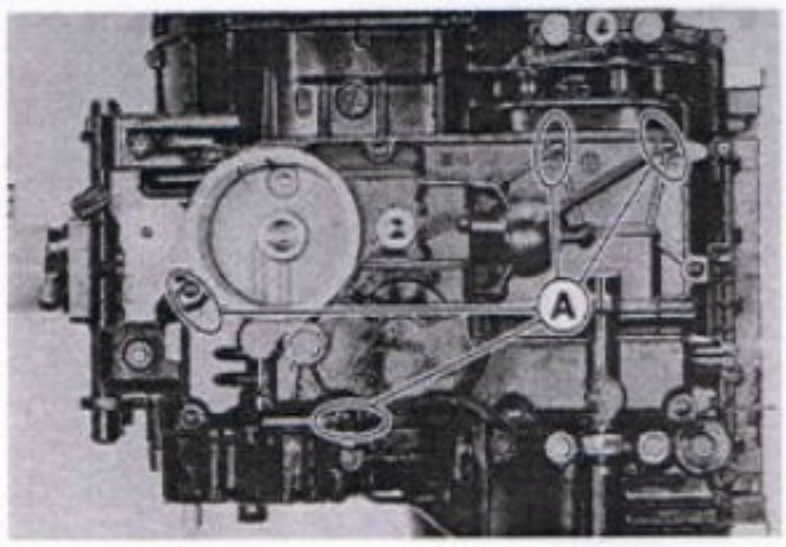

●If the oil pressure switch [A] has been removed, apply silicone sealant to the threads and tighten it to the specified torque.

Torque – Oil Pressure Switch: 15 N-m (1.5 kg-m, 11.0 ft-lb)
Oil Pressure Switch Terminal Bolt: 1.5 N-m (0.15 kg-m, 13 in-lb)

●Secure the switch lead with two bands [B].

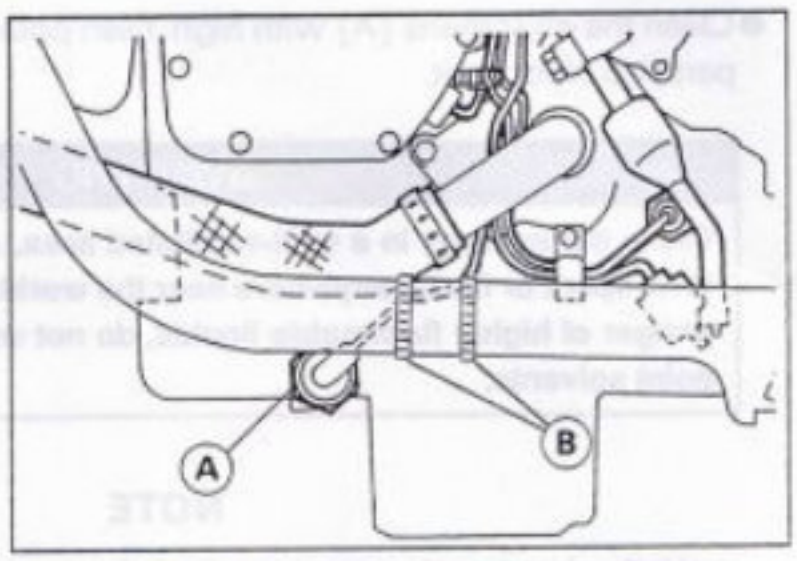

○Tighten the oil hose banjo bolt [A] so that the damper [B] contacts the stopper [C] on the oil pan.

●Tighten:

Torque – Oil Pipe Banjo Bolts : 25 N-m (2.5 kg-m, 18.0 ft-lb)
Oil Hose Banjo Bolts (12 mm): 25 N-m (2.5 kg-m, 18.0 ft-lb)
Oil Hose Banjo Bolts (14 mm): 34 N-m (3.5 kg-m, 25 ft-lb)

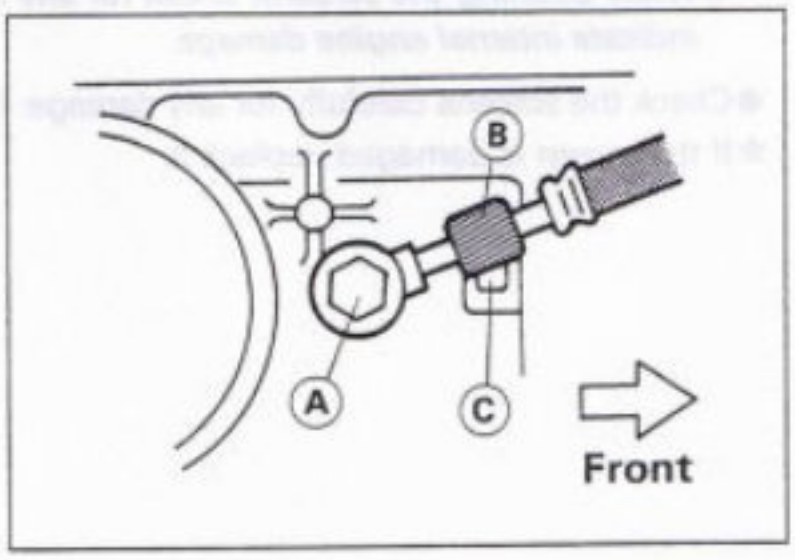

Oil Pump and Relief Valve

Oil Pump and Relief Valve Removal

- Remove:
  - Oil Pan (see this chapter)
  - Oil Screen
  - Oil Pipe
  - Oil Pump Bracket Bolts [A]
  - Pickup Coil Cover

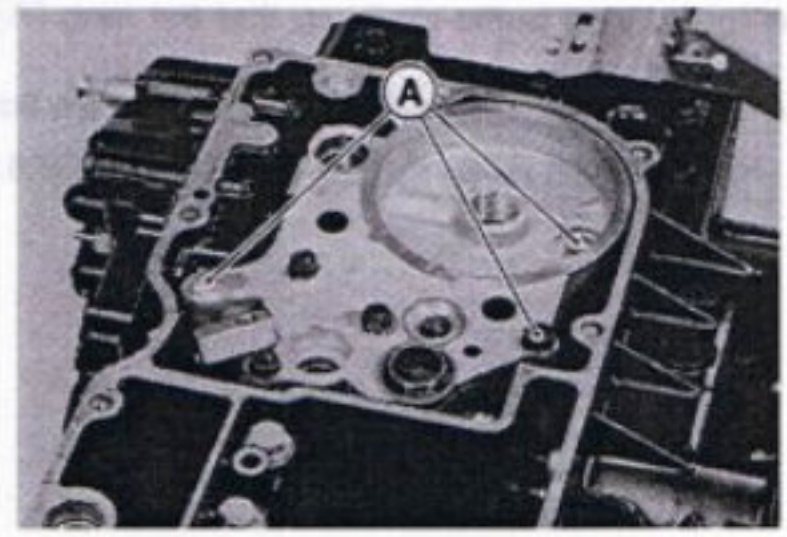

- Turn [A] the crankshaft counterclockwise until the tang and slot of the pump shaft ends are vertical and the oil pump bracket can be removed.
- Pull out the bracket and pump assembly.

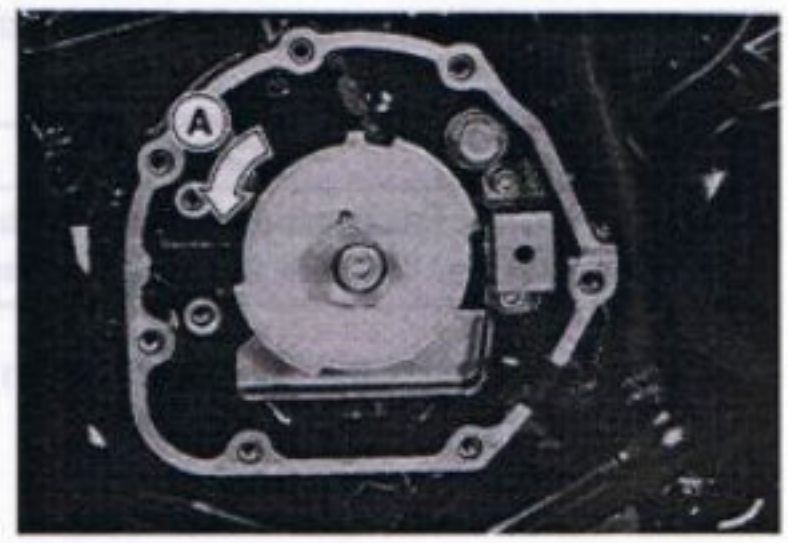

- Remove the oil pump mounting bolts [A] and separate the pump [B] from the bracket.
- Unscrew the relief valve [C] if necessary.

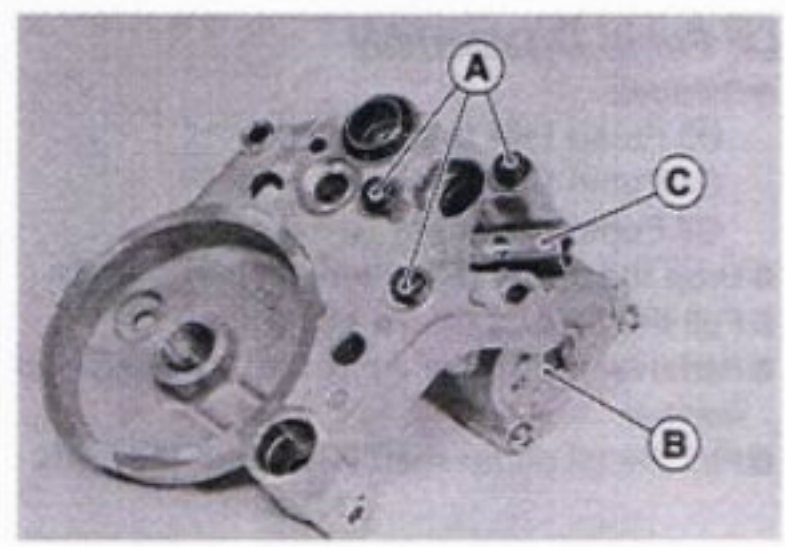

Oil Pump and Relief Valve Installation

- Fill the pump with engine oil before installation.
- Check that the collars and O-rings [A] are in place.
- ○ Install the outlet side O-rings [B] with the flat side facing the bracket.
- ○ Check that the oil pump shaft turns freely.

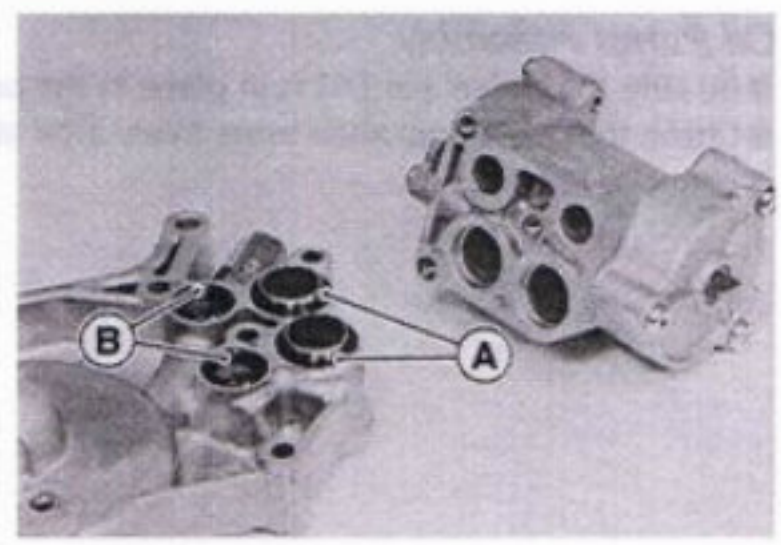

- Check that the dowel pin [A], orifice, and O-ring [B] are in place. The small hole of the orifice must face the oil pump bracket.
- Apply a non-permanent locking agent to the threads of the oil pump mounting bolts, and tighten them.

Torque – Oil Pump Mounting Bolts: 12 N-m (1.2 kg-m, 104 in-lb)

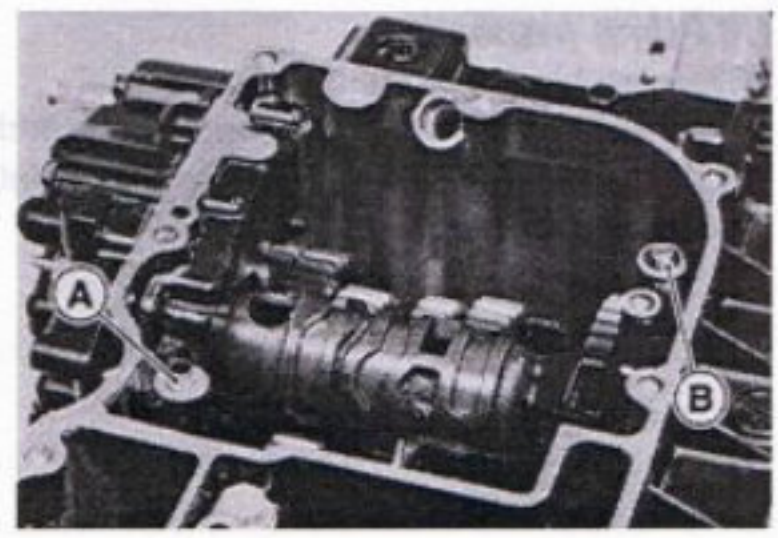

- Turn the oil pump shafts so that the tang [A] and slot [B] are both vertical.
- Install the oil pump bracket and tighten the bolts.

Torque – Oil Pump Bracket Bolts: 9.8 N-m (1.0 kg-m, 87 in-lb)

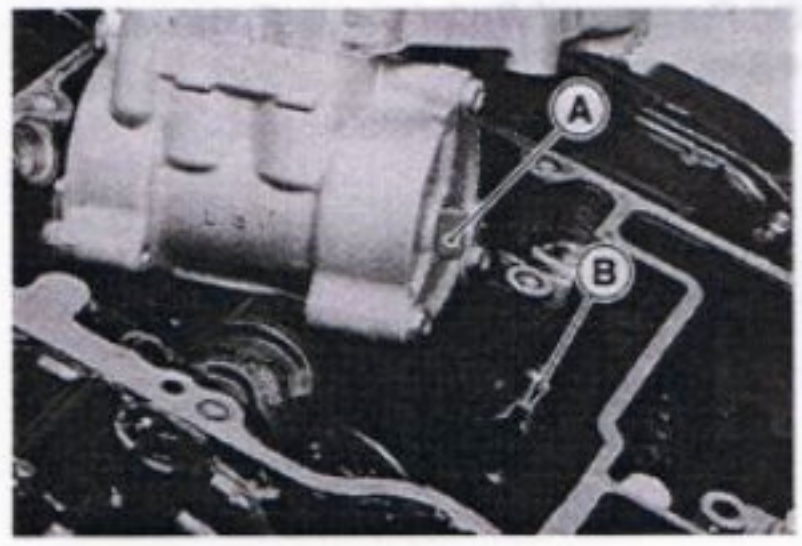

- Apply a non-permanent locking agent to the threads of the relief valve, and tighten it.

CAUTION
Do not apply too much non-permanent locking agent to the threads of the relief valve. This may block the oil passage.

Torque – Oil Pressure Relief Valve : 15 N-m (1.5 kg-m, 11.0 ft-lb)

Oil Pump Disassembly

- Remove:
  - Oil Pump (see this chapter)
  - Oil Pump Cover Screws
  - Oil Pump Cover [A]
- Drop the rotors [B] out of the pump body.
- Pull the pin [C] off the pump shaft.
- Remove the rotors from the other side of the pump in the same manner.
- Pull the oil pump shaft [D] out of the body

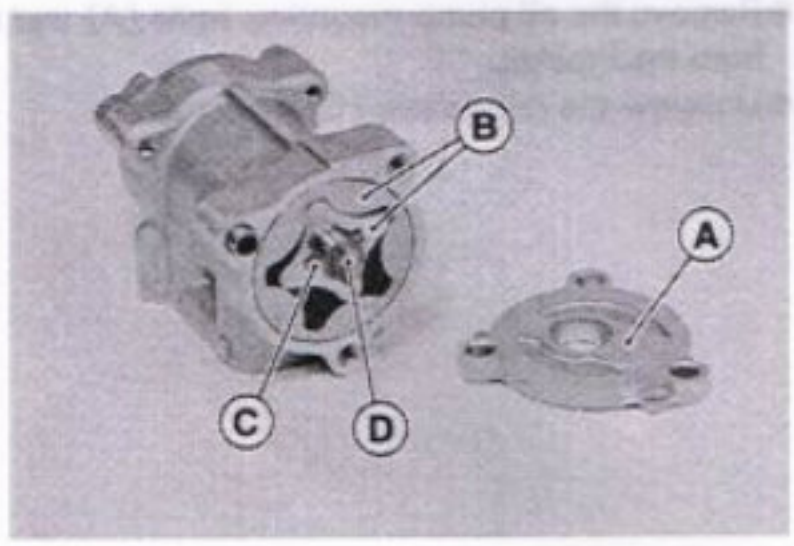

Oil Pump Assembly

- Be sure the dowel pin [A] is in place in the pump body.
- Check that the pump shaft turns freely after assembly.

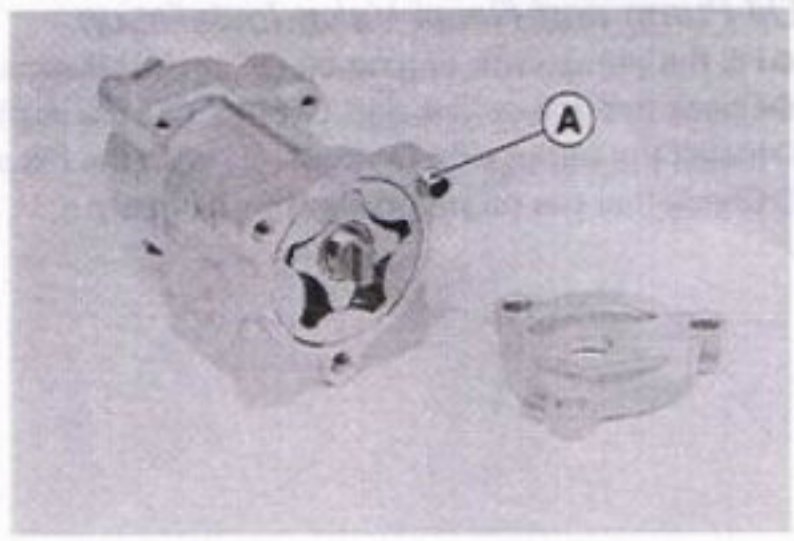

Oil Pump Inspection

- Disassemble the oil pump.
- Visually inspect the oil pump body, outer and inner rotors, and covers.

★if there is any damage or uneven wear, replace the rotors, or the oil pump assembly.

Oil Pump Gear Removal

- Remove the clutch (see Clutch chapter).
- Turn the oil pump gear so that the gear holder screws [A] can be removed through the pump gear holes.
- Take out the screws and remove the oil pump gear with the holder.
- Remove the circlip and separate the gear from the holder.

Special Tool – Outside Circlip Pliers: 57001-144

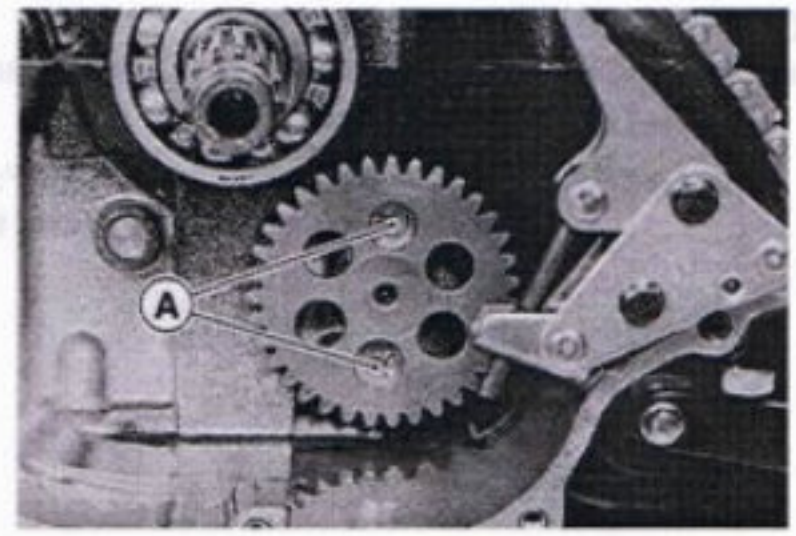

Oil Pump Gear Installation

- When installing the oil pump gear, note the position of the oil pump shaft tang and turn the gear so that the tang [A] fits into the slot [B] of the shaft.
- Apply a non-permanent locking agent to the threads of the holder screws, and tighten them.

Torque – Oil Pump Gear Holder Screws: 5.4 N-m (0.55 kg-m, 48 in-lb)

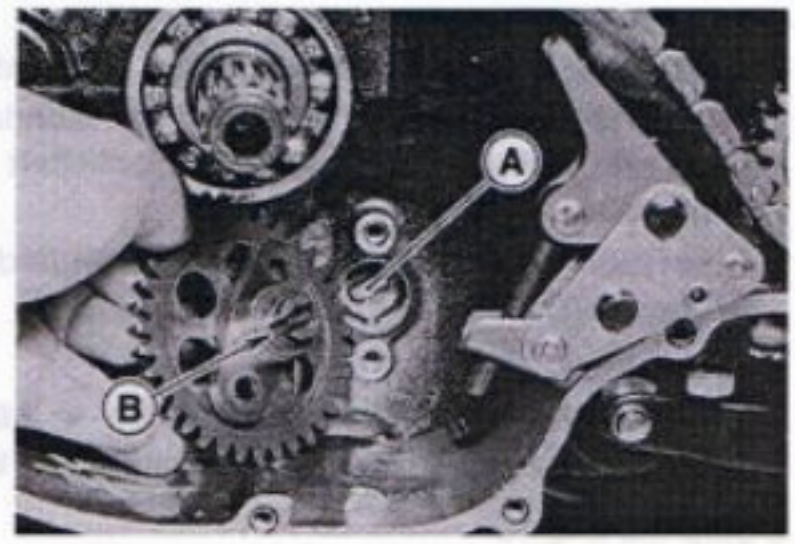

Relief Valve Inspection

- Remove:
  Oil Pan (see this chapter)
  Oil Pump Bracket [A]
  Relief Valve [B]

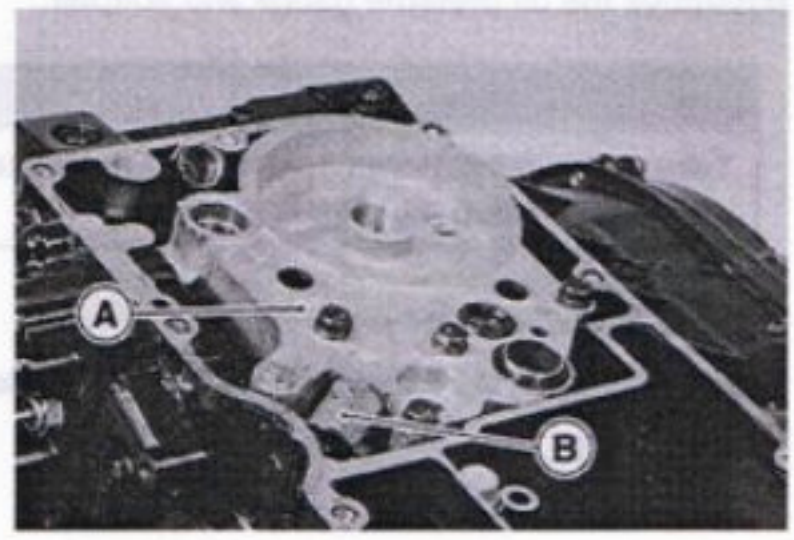

- Check to see if the valve [A] slides smoothly when pushing it in with a wooden or other soft rod, and see if it comes back to its seat by spring [B] pressure.

NOTE

○ *Inspect the valve in its assembled state. Disassembly and assembly may change the valve performance.*

★ If any rough spots are found during above inspection, wash the valve clean with a high-flash point solvent and blow out any foreign particles that may be in the valve with compressed air.

⚠WARNING

Clean the relief valve in a well-ventilated area, and take care that there is no spark or flame anywhere near the working area. Because of the danger of highly flammable liquids, do not use gasoline or low-flash point solvent.

★ If cleaning does not solve the problem, replace the relief valve as an assembly. The relief valve is precision made with no allowance for replacement of individual parts.

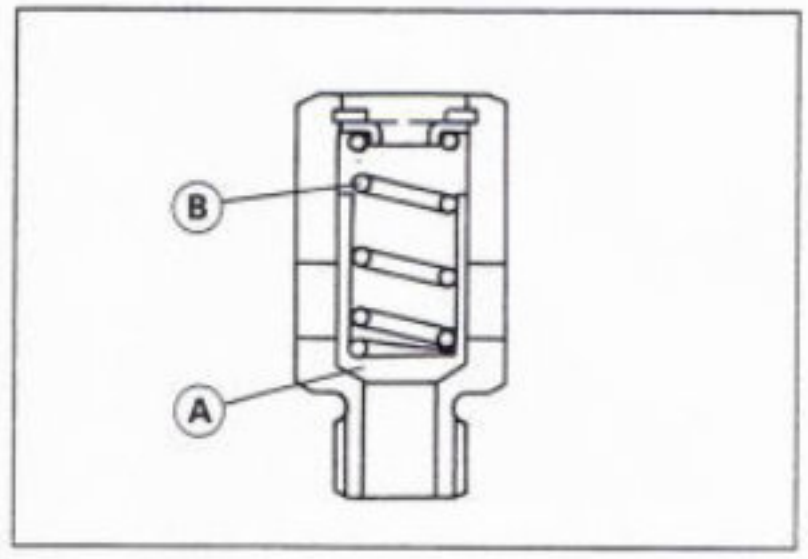

Oil Pressure

Oil Pressure Measurement

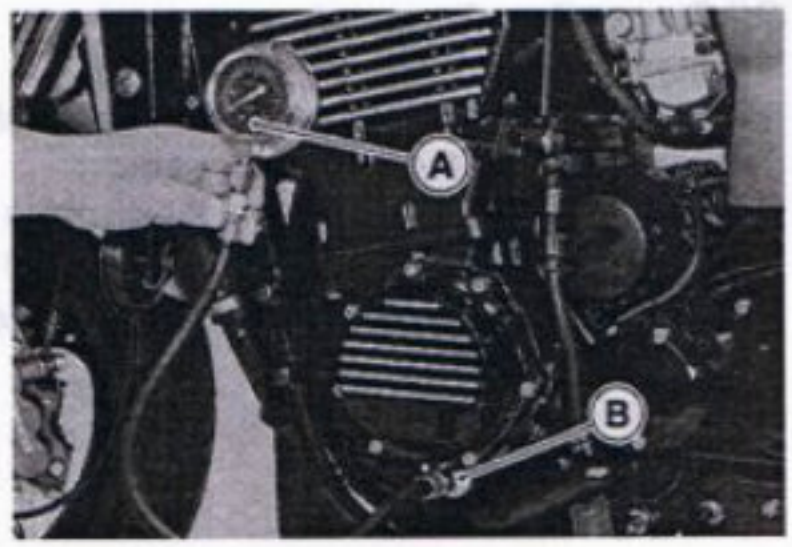

- Remove the main oil passage plug, and attach the gauge [A] and adapter [B] to the plug hole.

Special Tools – Oil Pressure Gauge, 5 kg/cm²: 57001-125
Oil Pressure Gauge Adapter, M18 x 1.5: 57001-1278

- Start the engine and warm up the engine.
- Run the engine at the specified speed, and read the oil pressure gauge.

★If the oil pressure is much lower than the standard, check the oil pump, oil pump relief valve, and/or crankshaft bearing insert wear immediately.

★If the reading is much higher than the standard, check the oil passages for clogging.

Oil Pressure
Standard: 196 ~ 294 kPa (2.0 ~ 3.0 kg/cm², 28 ~ 43 psi) @4000 r/min (rpm), oil temp. 90°C (194°F)

- Stop the engine
- Remove the oil pressure gauge and adapter.

⚠WARNING

Take care against burns from hot engine oil that will drain through the oil passage when the plug is removed.

- Install the oil passage plug.

Torque – Main Oil Passage Plug: 18 N-m (1.8 kg-m, 13.0 ft-lb)

Engine Removal / Installation

Table of Contents

Exploded View 7-2
Engine Removal/Installation 7-3
Engine Removal 7-3
Engine Installation 7-4

Exploded View

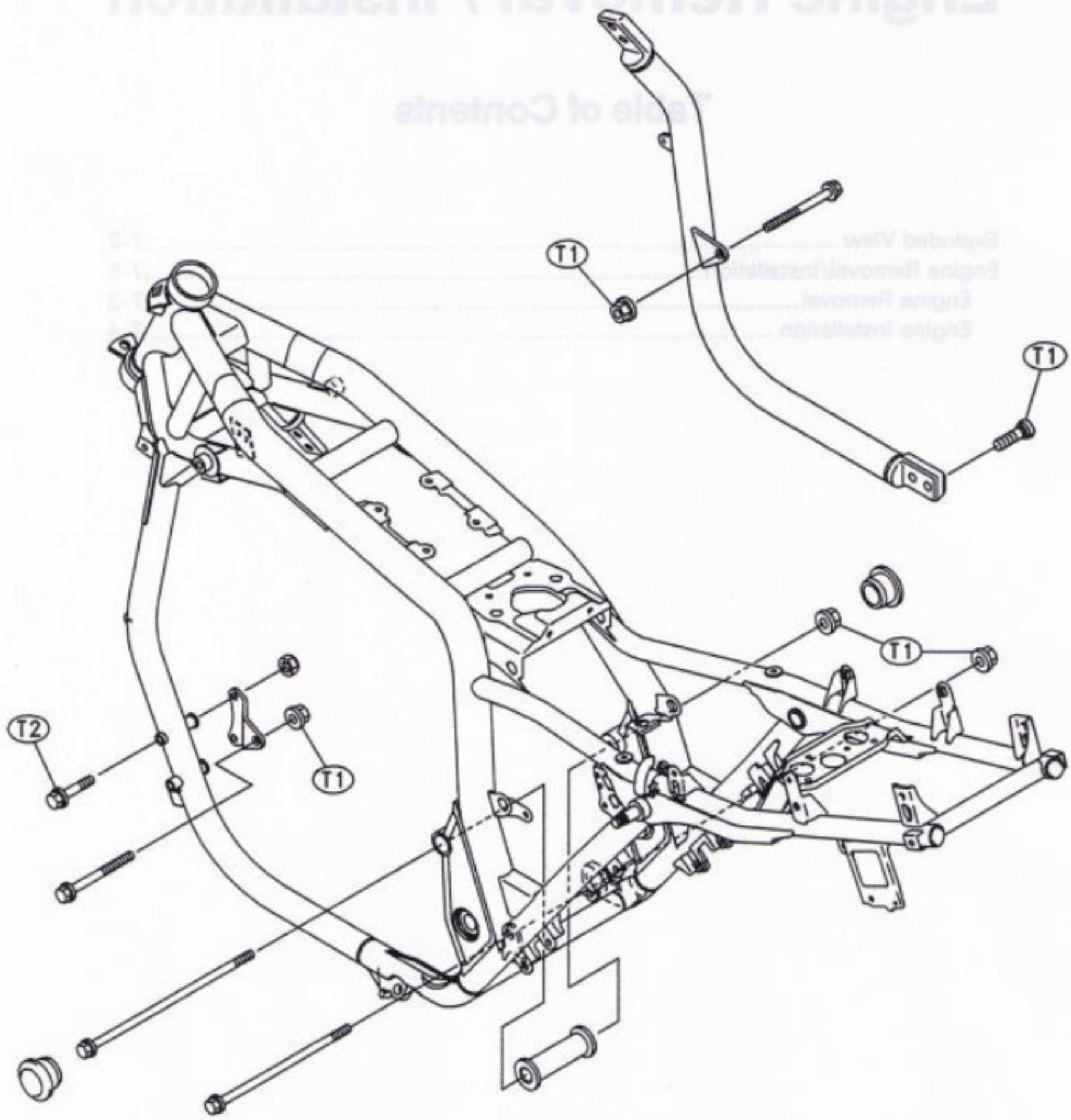

T1 : 44 N-m (4.5 kg-m, 33 ft-lb)
T2 : 23 N-m (2.3 kg-m, 16.5 ft-lb)

Engine Removal/Installation

Engine Removal

- Support the frame with a suitable stand.
- Squeeze the brake lever slowly and hold it with a band [A].

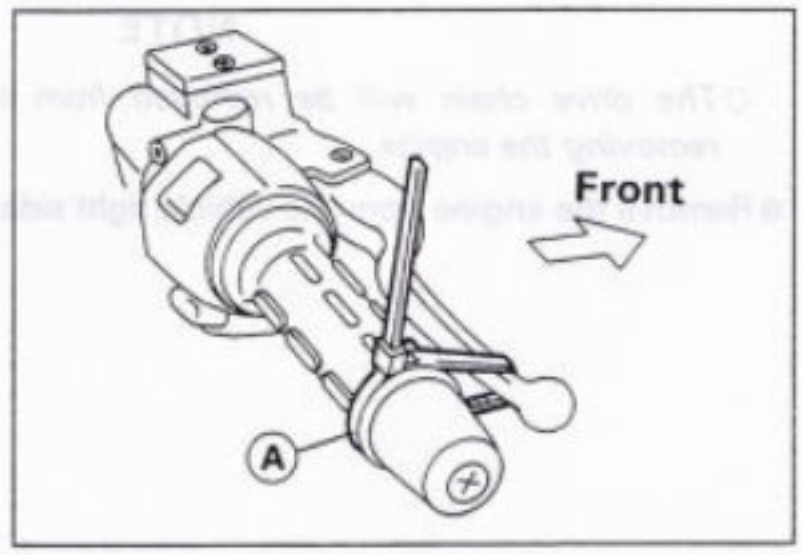

⚠WARNING

Be sure to hold the front brake when removing the engine, or the motorcycle may fall over. It could cause an accident and injury.

CAUTION

Be sure to hold the front brake when removing the engine, or the motorcycle may fall over. The engine or the motorcycle could be damaged.

- Drain:
  Coolant (see Cooling System chapter)
  Engine Oil (see Engine Lubrication System chapter)
- Remove:
  Seat (see Frame chapter)
  Fuel Tank (see Fuel System chapter)
  Radiator (see Cooling System chapter)
  Muffler (see Engine Top End chapter)
  Carburetors (see Fuel System chapter)
  Air Cleaner Housing (see Fuel System chapter)
  Water Pump (see Cooling System chapter)
  Engine Sprocket (see Final Drive chapter)
  Shift Pedal
- Pull off the connectors from the engine and free the wiring from the clamps.
  Pickup Coil Lead Connector
  Alternator Lead Connector
  Oil Pressure Switch Lead
  Neutral Switch Lead
  Side Stand Switch Lead Connector

  Battery Negative Lead [A]
  Starter Motor Lead [B]

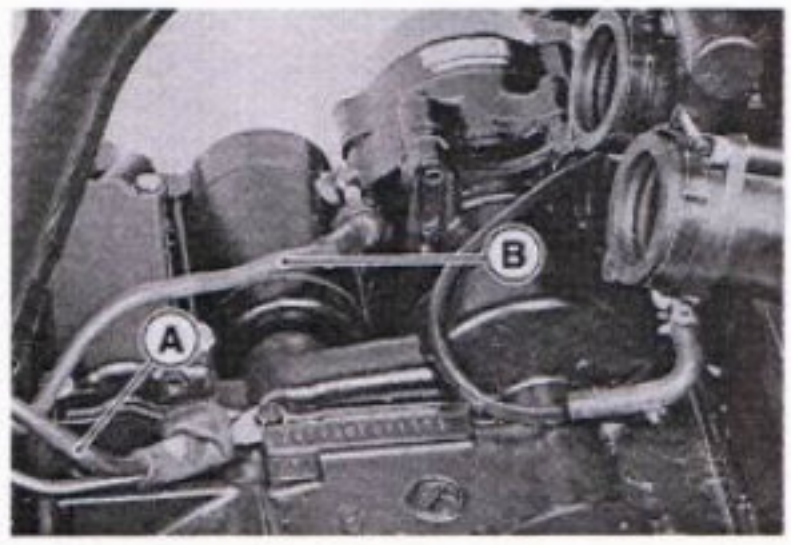

- Support the engine with a stand or jack [A].
- Remove the caps.
- Remove the rear upper, lower engine mounting bolts [B] and collar.
- Remove the front engine mounting bolts [C] on both sides.
- Remove the engine bracket.
- Remove the downtube bolts [D] and take off the downtube.

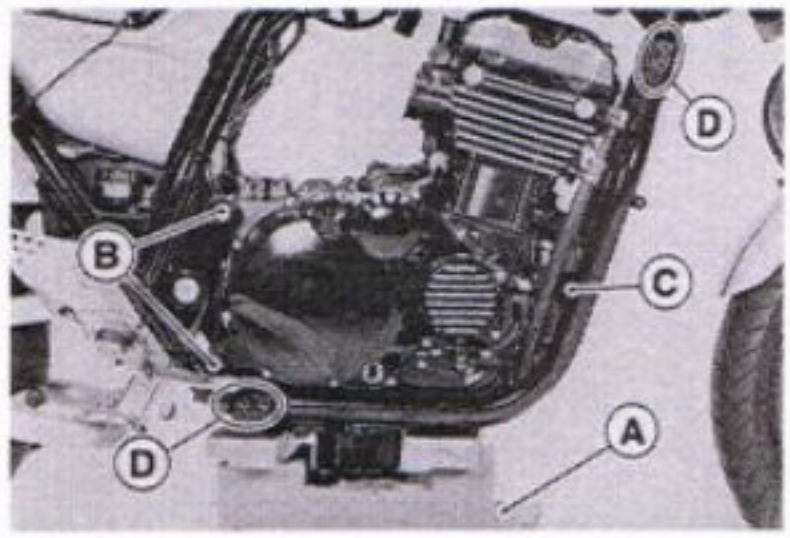

NOTE

○*The drive chain will be removed from the output shaft when removing the engine.*

- Remove the engine from the vehicle right side.

Engine Installation

- Hang the drive chain over the output shaft just before moving the engine into its final position in the frame.
- Insert the rear mounting bolts from the left side of the engine.
- Install the collar on the rear upper mounting bolt.
- Tighten:

Torque – Downtube Bolts : 44 N-m (4.5 kg-m, 33 ft-lb)
Engine Bracket Bolts : 23 N-m (2.3 kg-m, 16.5 ft-lb)
Engine Mounting Bolts and Nuts : 44 N-m (4.5 kg-m, 33 ft-lb)

- Run the leads, cables and hoses correctly (see Cable, Wire and House Routing section in General Information chapter).
- Install the removed parts (see appropriate chapters).
- Adjust:
  Throttle Cables (see Fuel System chapter)
  Choke Cable (see Fuel System chapter)
  Drive Chain (see Final Drive chapter)

Crankshaft / Transmission

Table of Contents

Exploded View 8-2
Specifications 8-4
Crankcase 8-6
Crankcase Splitting 8-6
Crankcase Assembly 8-7
Crankshaft and Connecting Rods 8-9
Crankshaft Removal 8-9
Crankshaft Installation 8-9
Connecting Rod Removal 8-9
Connecting Rod Installation 8-10
Crankshaft/Connecting Rod Cleaning 8-13
Connecting Rod Bend 8-13
Connecting Rod Twist 8-13
Connecting Rod Big End Side Clearance 8-13
Connecting Rod Big End Bearing Insert/Crankpin Wear 8-14
Crankshaft Side Clearance 8-15
Crankshaft Runout 8-15
Crankshaft Main Bearing Insert/Journal Wear 8-16
Balancer 8-18
Balancer Removal 8-18
Balancer Installation 8-18
Balancer Damper Inspection 8-19
Alternator Shaft/Starter Motor Clutch 8-20
Alternator Chain and Tensioner Removal 8-20
Alternator Chain and Tensioner Installation 8-20
Alternator Shaft Removal 8-21
Alternator Shaft Installation 8-21
Coupling Damper Inspection 8-21
Alternator Chain Guide Wear 8-22
Alternator Chain Wear 8-22
Starter Motor Clutch Inspection 8-22
Starter Motor Clutch Disassembly 8-22
Starter Motor Clutch Assembly 8-23
Transmission 8-24
Shift Pedal Removal 8-24
Shift Pedal Installation 8-24
External Shift Mechanism Removal 8-24
External Shift Mechanism Installation 8-25
External Shift Mechanism Inspection 8-26
Transmission Shaft Removal 8-26
Transmission Shaft Installation 8-26
Transmission Disassembly 8-27
Transmission Assembly 8-27
Shift Drum and Fork Removal 8-28
Shift Drum and Fork Installation 8-28
Shift Drum Disassembly 8-29
Shift Drum Assembly 8-29
Shift Fork Bending 8-29
Shift Fork/Gear Groove Wear 8-29
Shift Fork Guide Pin/Drum Groove Wear 8-30
Gear Dog and Gear Dog Hole Damage 8-30
Ball Bearing, Needle Bearing, and Oil Seal 8-31
Ball and Needle Bearing Replacement 8-31
Ball and Needle Bearing Wear 8-31
Oil Seal Inspection 8-31

Exploded View

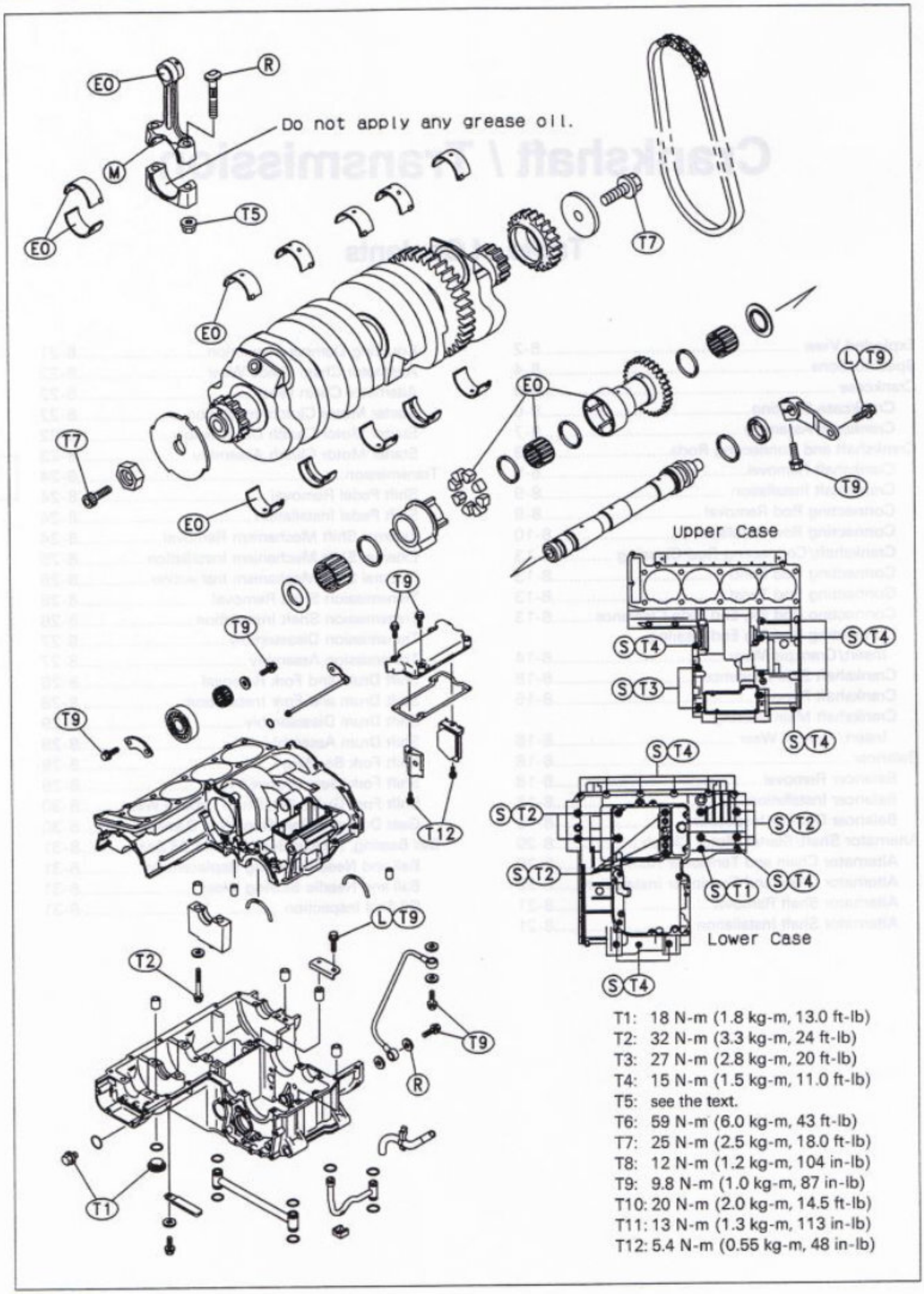

T1: 18 N-m (1.8 kg-m, 13.0 ft-lb)
T2: 32 N-m (3.3 kg-m, 24 ft-lb)
T3: 27 N-m (2.8 kg-m, 20 ft-lb)
T4: 15 N-m (1.5 kg-m, 11.0 ft-lb)
T5: see the text.
T6: 59 N-m (6.0 kg-m, 43 ft-lb)
T7: 25 N-m (2.5 kg-m, 18.0 ft-lb)
T8: 12 N-m (1.2 kg-m, 104 in-lb)
T9: 9.8 N-m (1.0 kg-m, 87 in-lb)
T10: 20 N-m (2.0 kg-m, 14.5 ft-lb)
T11: 13 N-m (1.3 kg-m, 113 in-lb)
T12: 5.4 N-m (0.55 kg-m, 48 in-lb)

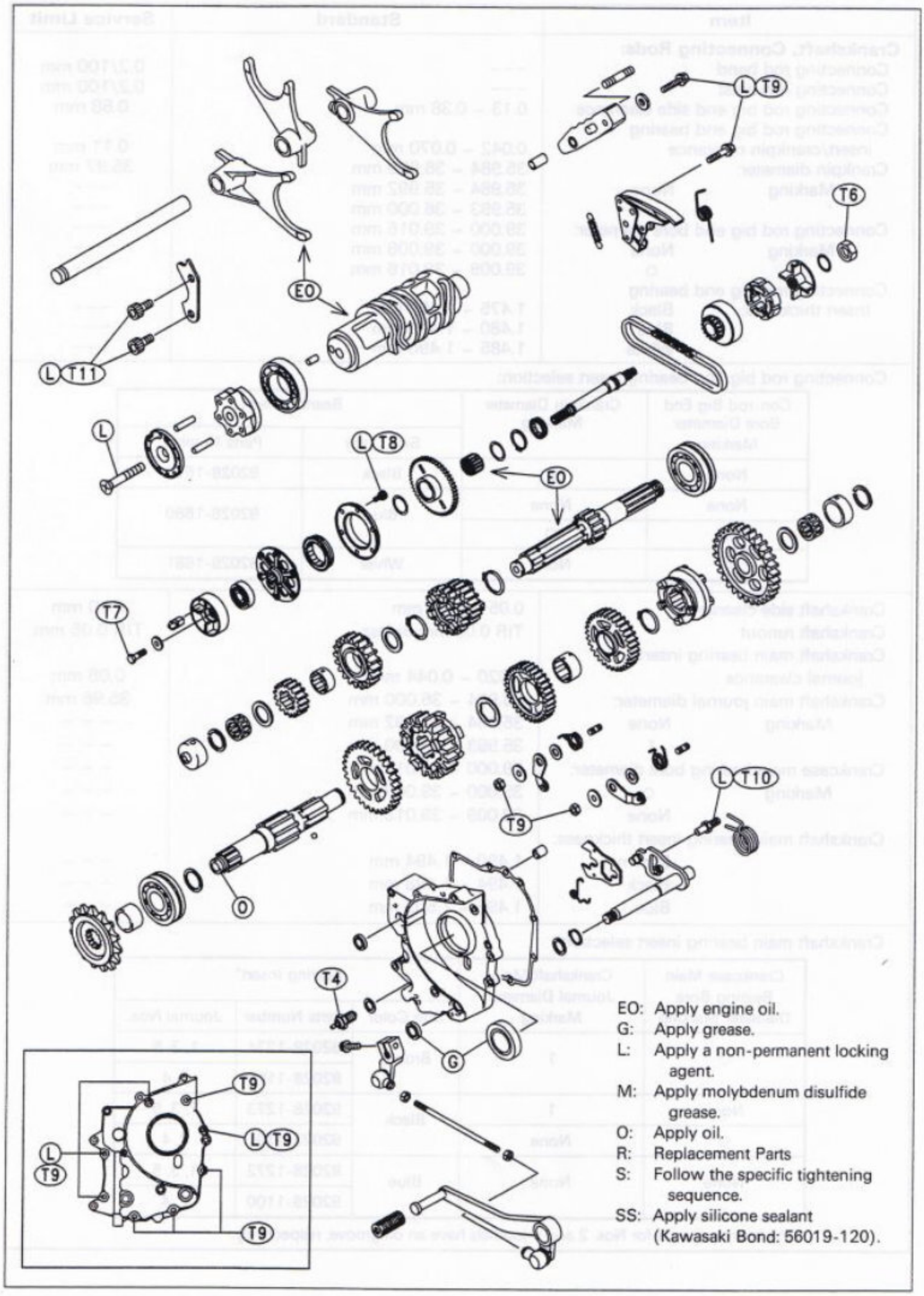
L T9
T6
EO
L T11
L
L T8
EO
T7
L T10
T9
O
T4
G
T9
L T9
L
T9
T9
EO: Apply engine oil.
G: Apply grease.
L: Apply a non-permanent locking agent.
M: Apply molybdenum disulfide grease.
O: Apply oil.
R: Replacement Parts
S: Follow the specific tightening sequence.
SS: Apply silicone sealant (Kawasaki Bond: 56019-120).

Specifications

Item		Standard	Service Limit
Crankshaft, Connecting Rods:			
Connecting rod bend		---	0.2/100 mm
Connecting rod twist		---	0.2/100 mm
Connecting rod big end side clearance		0.13 ~ 0.38 mm	0.58 mm
Connecting rod big end bearing insert/crankpin clearance		0.042 ~ 0.070 mm	0.11 mm
Crankpin diameter:		35.984 ~ 36.000 mm	35.97 mm
Marking	None	35.984 ~ 35.992 mm	---
	○	35.993 ~ 36.000 mm	---
Connecting rod big end bore diameter:		39.000 ~ 39.016 mm	---
Marking	None	39.000 ~ 39.008 mm	---
	○	39.009 ~ 39.016 mm	---
Connecting rod big end bearing Insert thickness:	Black	1.475 ~ 1.480 mm	---
	Blue	1.480 ~ 1.485 mm	---
	White	1.485 ~ 1.490 mm	---

Connecting rod big end bearing insert selection:

Con-rod Big End Bore Diameter Marking	Crankpin Diameter Marking	Bearing Insert	
		Size Color	Parts Number
None	○	Black	92028-1679
None	None	Blue	92028-1680
○	○		
○	None	White	92028-1681

Crankshaft side clearance		0.05 ~ 0.20 mm	0.40 mm
Crankshaft runout		TIR 0.02 mm or less	TIR 0.05 mm
Crankshaft main bearing insert/ journal clearance		0.020 ~ 0.044 mm	0.08 mm
Crankshaft main journal diameter:		35.984 ~ 36.000 mm	35.96 mm
Marking	None	35.984 ~ 35.992 mm	---
	1	35.993 ~ 36.000 mm	---
Crankcase main bearing bore diameter:		39.000 ~ 39.016 mm	---
Marking	○	39.000 ~ 39.008 mm	---
	None	39.009 ~ 39.016 mm	---
Crankshaft main bearing insert thickness:			
	Brown	1.490 ~ 1.494 mm	---
	Black	1.494 ~ 1.498 mm	---
	Blue	1.498 ~ 1.502 mm	---

Crankshaft main bearing insert selection:

Crankcase Main Bearing Bore Diameter Marking	Crankshaft Main Journal Diameter Marking	Bearing Insert*		
		Size Color	Parts Number	Journal Nos.
○	1	Brown	92028-1274	1, 3, 5
			92028-1102	2, 4
None	1	Black	92028-1273	1, 3, 5
○	None		92028-1101	2, 4
None	None	Blue	92028-1272	1, 3, 5
			92028-1100	2, 4

*The bearing inserts for Nos. 2 and 4 journals have an oil groove, respectively.

Item	Standard	Service Limit
Alternator Shaft:		
Alternator chain 20 link-length	158.8 ~ 159.2 mm	161.0 mm
Transmission:		
Shift fork ear thickness	4.9 ~ 5.0 mm	4.8 mm
Gear groove width	5.05 ~ 5.15 mm	5.25 mm
Shift fork guide pin diameter	7.9 ~ 8.0 mm	7.8 mm
Shift drum groove width	8.05 ~ 8.20 mm	8.30 mm

Special Tools – Coupling Holder: 57001-1189
Outside Circlip Pliers: 57001-144
Bearing Puller Adapter: 57001-317
Bearing Puller: 57001-135
Steering Stem Bearing Driver: 57001-137
Bearing Driver Set: 57001-1129

Sealant – Kawasaki Bond (Silicone Sealant): 56019-120

Crankcase

Crankcase Splitting

- Remove the engine (see Engine Removal/Installation chapter).
- Set the engine on a clean surface and hold the engine steady while parts are being removed.
- Remove the following parts from the engine.
  External Shift Mechanism
  Starter Motor
  Alternator
  Pickup Coil
  Clutch Cover
  Alternator Chain Tensioner

★If the crankshaft is to be removed, remove the following.
  Pistons (see Engine Top End chapter)
  Alternator Shaft Chain and Sprockets (see this chapter)

★If the transmission drive shaft is to be removed, remove the clutch (see Clutch chapter).

- Remove the upper crankcase bolts in the order listed.
  6 mm Bolts [A]
  8 mm Bolts [B]
- Turn the engine upside down, and remove the following.
  Oil Pan
  Hose and Oil Pipes
  Oil Pump Bracket

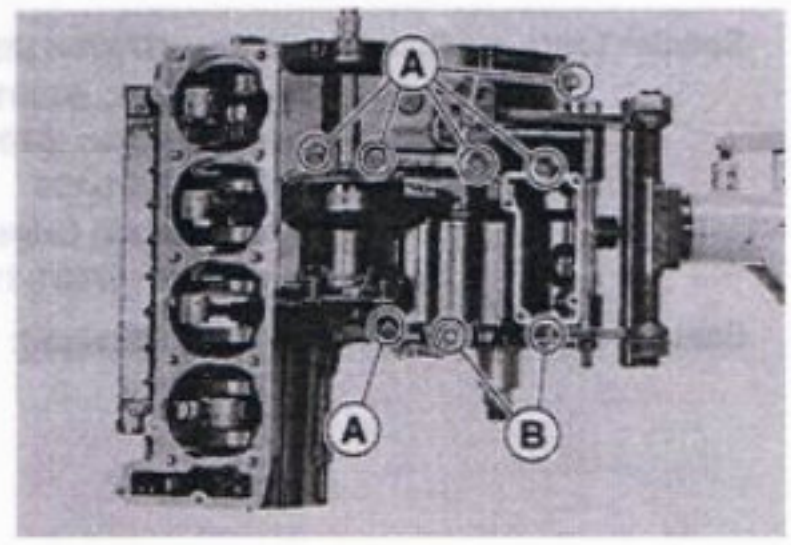

- Remove the lower crankcase bolts in the order listed.
  6 mm Bolts [A]
  7 mm Bolt [B]
  9 mm Bolts [C]

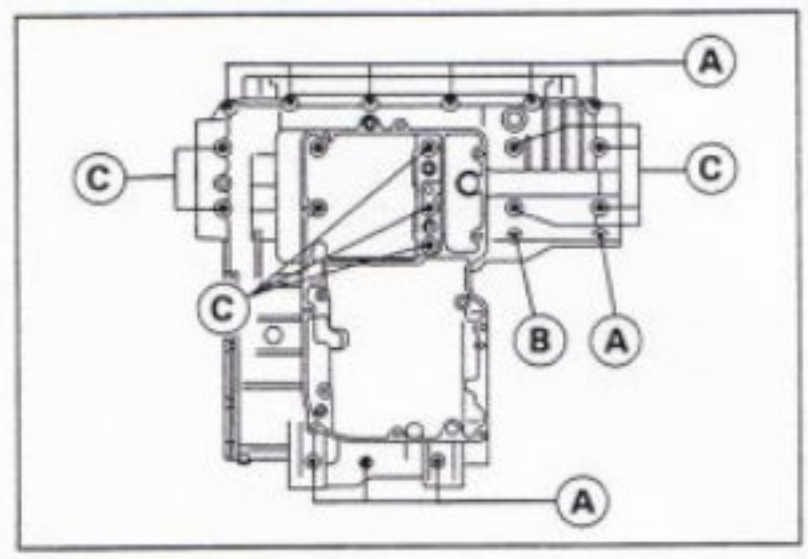

- Pry the points [A] shown to split the crankcase halves apart, and remove the lower crankcase half.
  ○Tap lightly around the crankcase joint with a plastic mallet, and split the crankcase. Take care not to damage the crankcase.

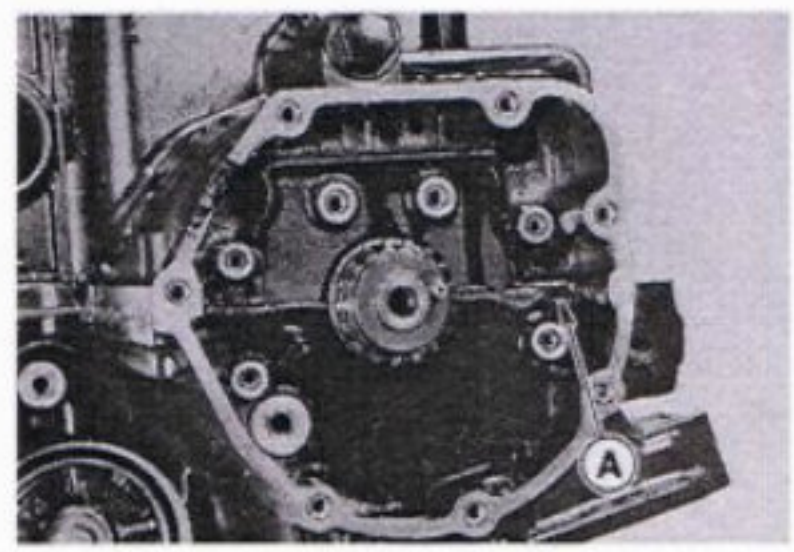

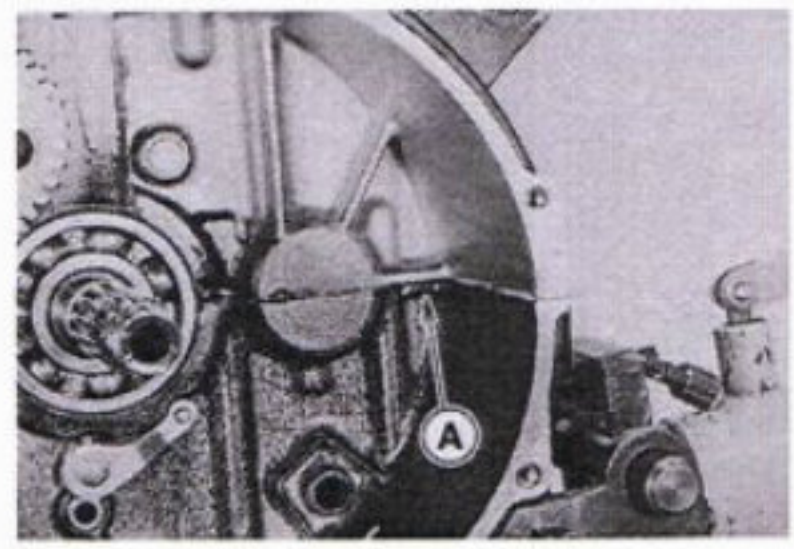

Crankcase Assembly

NOTE

○ *The upper crankcase half, the lower crankcase half, and the crankshaft main bearing cap are machined at the factory in the assembled state, so the crankcase halves and the main bearing cap must be replaced together as a set.*

● Check that the dowel pins [A] are in place.

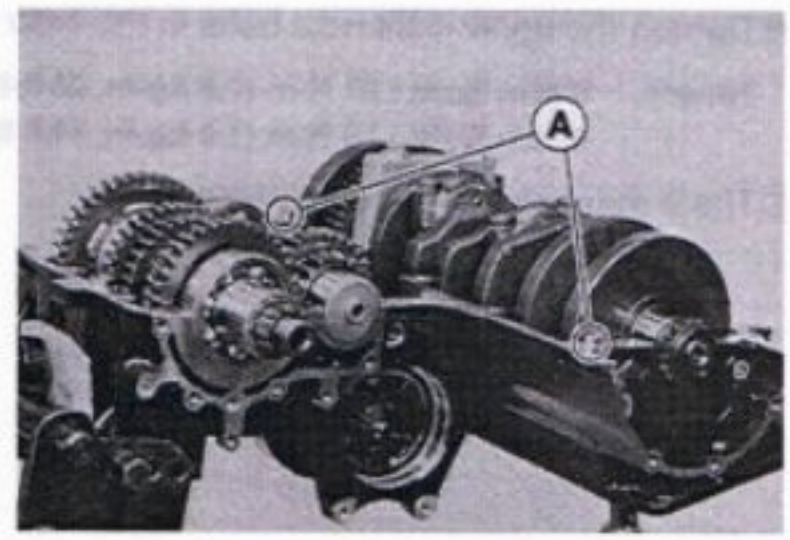

● Set the transmission gears and shift drum in the neutral position (The neutral set lever [A] fits into the detent [B] of the shift drum cam).

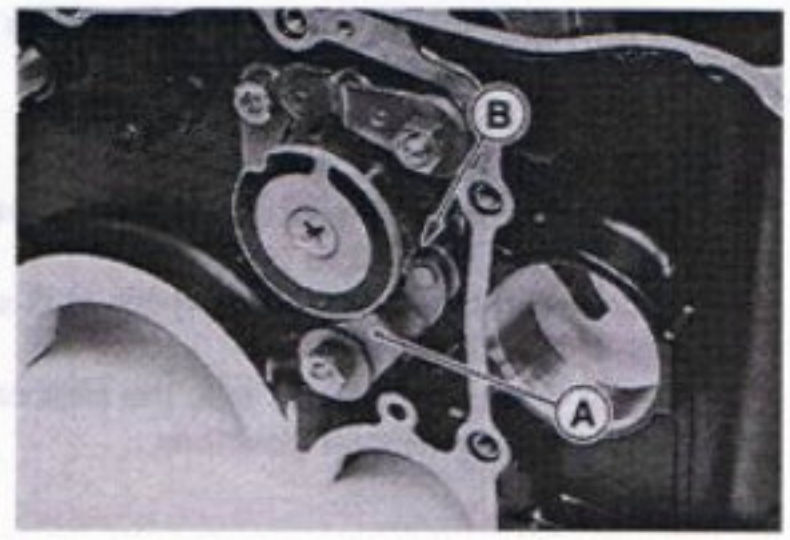

● With a high-flash point solvent, clean off the mating surfaces of the crankcases halves and wipe dry.
● Apply silicone sealant [A] to the mating surface of the lower crankcase half.

Sealant – Kawasaki Bond (Silicone Sealant): 56019-120

CAUTION
Do not apply silicone sealant to the areas [B] shown.

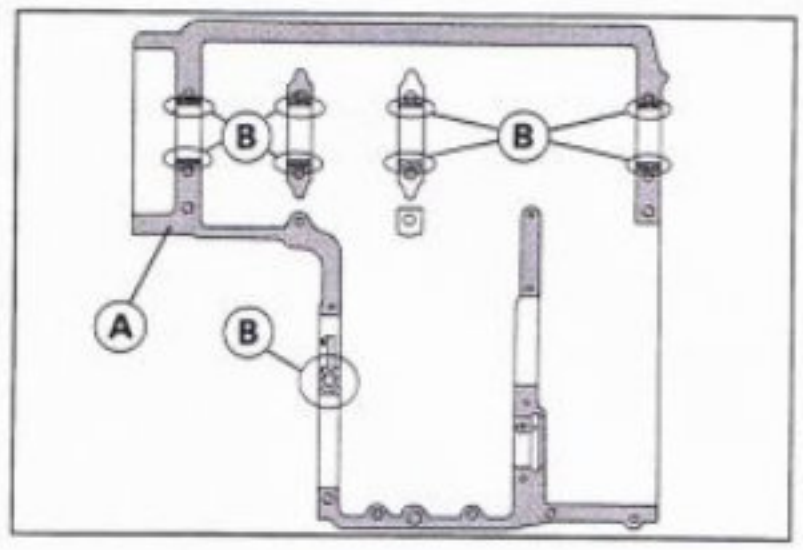

● Position the crankshaft at #1, 4 piston TDC.
● Hold the balancer so that the mark [A] on the balancer weight aligns with the center of the oil passage hole [B].

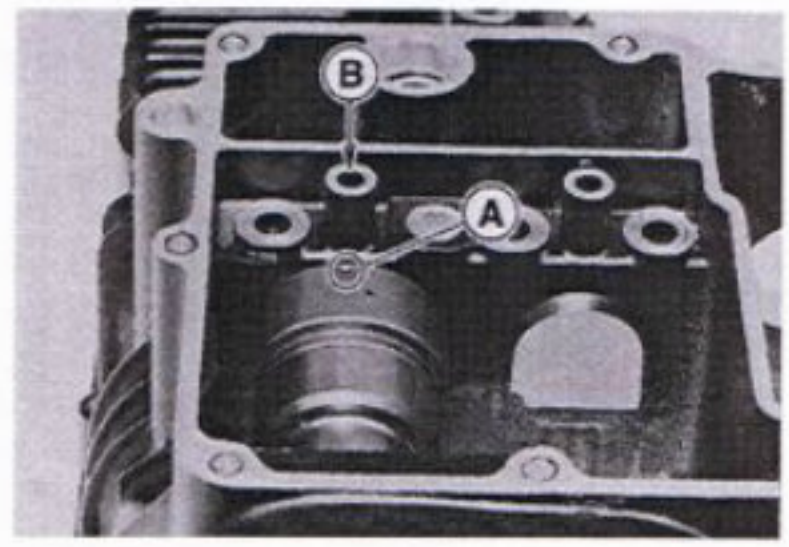

● Tighten the lower crankcase bolts using the following steps.
○ The three 9 mm bolts (No. 1 ~ 3) have a flat washer, respectively.
○ Following the tightening sequence, tighten the 9 mm bolts.

Torque – 9 mm Bolts (No. 1 ~ 9)
First: 9.8 N-m (1.0 kg-m, 87 in-lb)
Final: 32 N-m (3.3 kg-m, 24 ft-lb)

○ Tighten :

Torque – 7 mm Bolt: 18 N-m (1.8 kg-m, 13.0 ft-lb) (No. 10)
6 mm Bolts : 15 N-m (1.5 kg-m, 11.0 ft-lb)

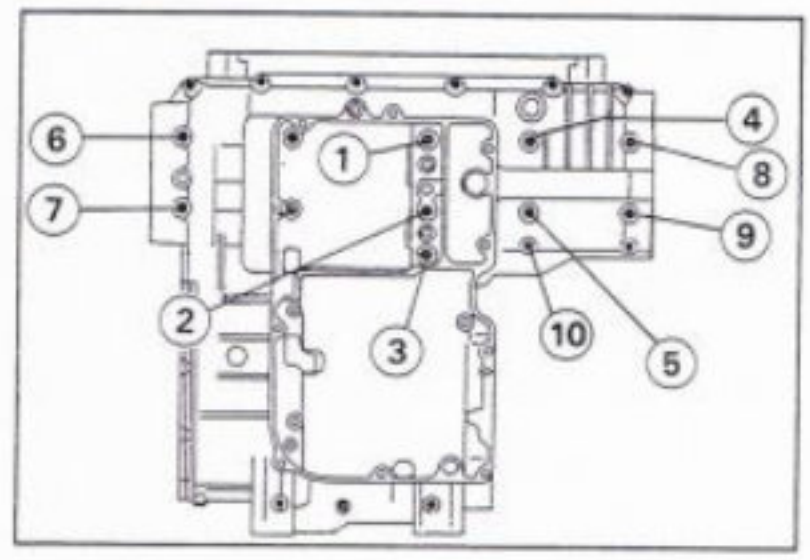

●Tighten the upper crankcase bolts in the order listed.

Torque – 8 mm Bolts : 27 N-m (2.8 kg-m, 20 ft-lb) [A]
6 mm Bolts : 15 N-m (1.5 kg-m, 11.0 ft-lb) [B]

○The 8 mm bolt [C] has a copper washer.

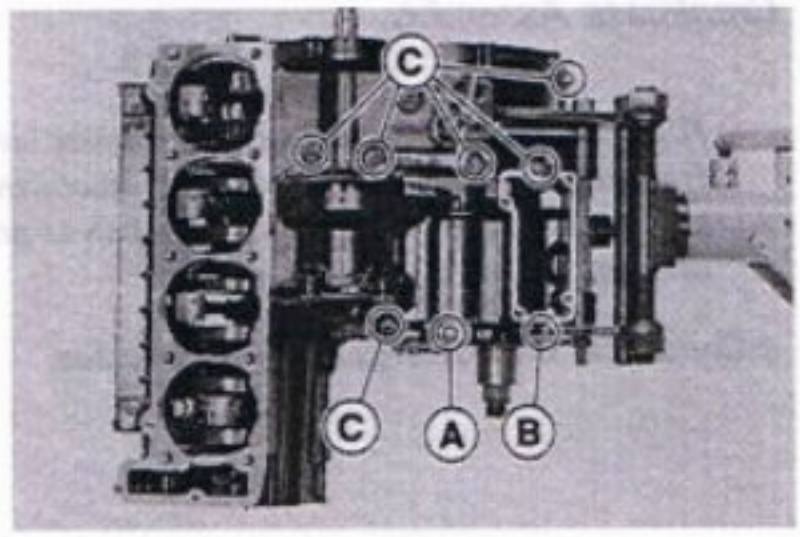

●After tightening all crankcase bolts, check the following items.
Shift drum is in the neutral position.
The #1 and 4 pistons are TDC.
Drive shaft and output shaft turn freely.
Neutral finder operates properly (while spinning the outshaft, gears can be shifted from 1st to 2nd).
While spinning the output shaft, gears shift smoothly from the 1st to 5th gear, and 5th to 1st.
When the output shaft stays still, the gear can not be shifted to 2nd gear or other higher gear positions.

Crankshaft and Connecting Rods

Crankshaft Removal

- Split the crankcase (see Crankcase Splitting).
- Remove the main bearing cap bolts [A] with flat washers, and take off the cap [B].
- Remove the crankshaft.

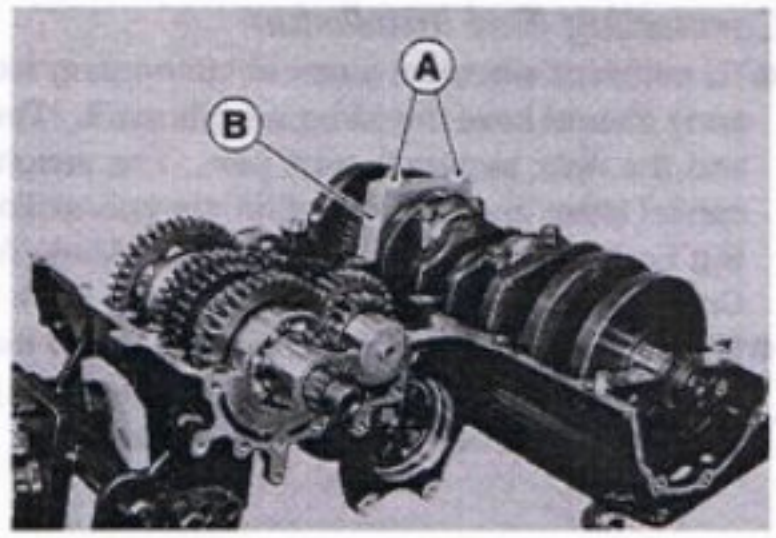

Crankshaft Installation

CAUTION
If the crankshaft, bearing inserts, or crankcase halves are replaced with new ones, select the bearing inserts and check clearance with plastigage before assembling engine to be sure the correct bearing inserts are installed.

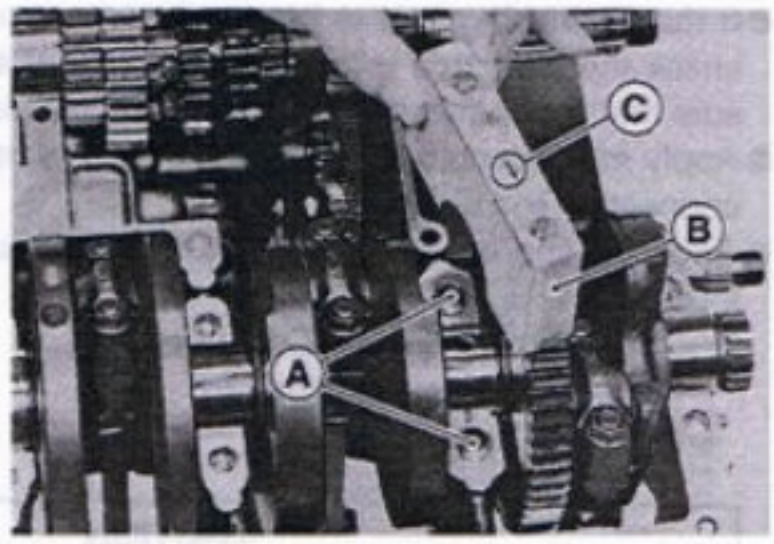

- Check that the dowel pins[A] are in place.
- Install the main bearing cap [B] with the arrow [C] on it pointing forward.

○ Tighten the main bearing cap bolts.

Torque – Main Bearing Cap Bolts: 32 N-m (3.3 kg-m, 24 ft-lb).

Connecting Rod Removal

- Split the crankcase (see Crankcase Splitting).
- Remove the connecting rod nuts.
- Remove the crankshaft.

NOTE

○ *Mark and record the locations of the connecting rods and their big end caps so that they can be reassembled in their original positions.*

- Remove the connecting rods from the crankshaft.

CAUTION
Discard the connecting rod bolts. **To prevent damage to the crankpin surfaces, do not allow the connecting rod bolts to bump against the crankpins.**

Connecting Rod Installation

- To minimize vibration, a pair of connecting rods (left two rods or right two) should have the same weight mark. The left two rods are a pair and the right two rods are a pair. The weight mark is indicated by a capital letter, and is stamped on the connecting rod big end.
  Big End Cap [A] Weight Mark, Alphabet [C]
  Connecting Rod [B] Diameter Mark [D]
- Before installing the connecting rods, blow the crankshaft oil passages with compressed air to remove any foreign particles or residue that may have accumulated in the passages.

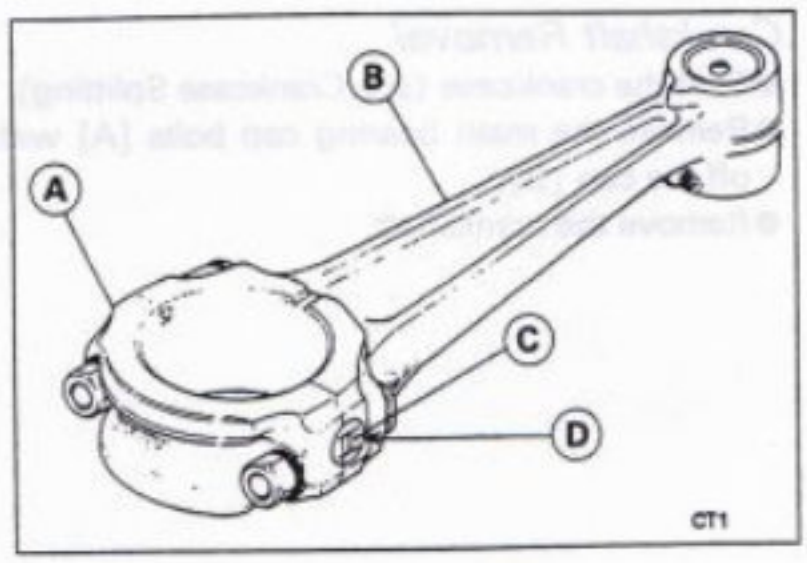

- If the connecting rods or bearing inserts are replaced with new ones, check the clearance with plastigage before assembling engine to be sure that the correct bearing inserts are installed.
- Apply molybdenum disulfide grease to the upper inner surface of the connecting rod big end.
- Apply engine oil to the inner surfaces of upper and lower bearing inserts.
  Apply molybdenum disulfide grease [A].
  Do not apply grease and oil [B].
  Oil [C]

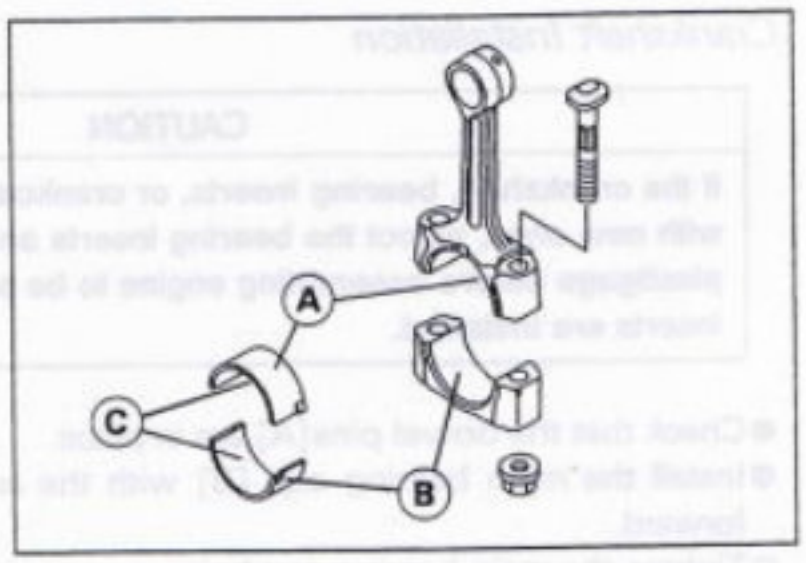

CAUTION

Do not apply grease to the inner surface of the upper or lower bearing inserts or to the outer surface of the lower bearing insert.

- ○ The connecting rod big end is bolted using the "plastic region fastening method".
- ○ This method precisely achieves the needed clamping force without exceeding it unnecessarily, allowing the use of thinner, lighter bolts further decreasing connecting rod weight.
- ○ There are two types of the plastic region fastening. One is a bolt length measurement method and other is a rotation angle method. Observe one of the following two, but the bolt length measurement method is preferable because this is a more reliable way to tighten the big end nuts.

CAUTION

The connecting rod bolts are designed to stretch when tightened. Never reuse the connecting rod bolts. See the table below for correct bolt and nut usage.

CAUTION

Be careful not to overtighten the nuts.
Do not turn the connecting rod bolts during nut tightening. The bolts must be positioned correctly to prevent the bolt heads from hitting the crankcase while the engine is running.

Connecting Rod Big End Shoulder [A]
Correct Position of Bolt Head [B]
Wrong Position of Bolt Head [C]

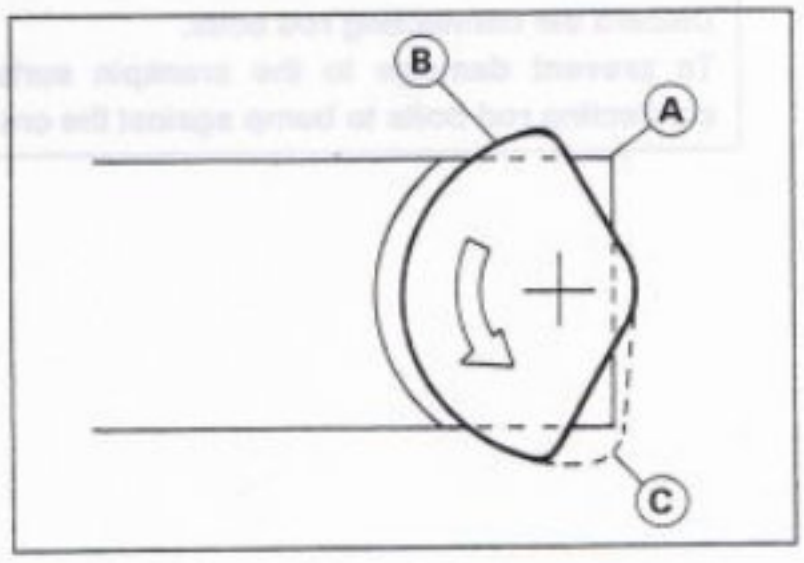

(1) Bolt Length Measurement Method

- Be sure to clean the bolts, nuts, and connecting rods thoroughly with high-flash point solvent, because the new connecting rods, bolts, and nuts are treated with an anti-rust solution.

⚠WARNING

Clean the bolts, nuts, and connecting rods in a well-ventilated area, and take care that there is no spark or flame anywhere near the working area. This includes any appliance with a pilot light. Because of the danger of highly flammable liquids, do not use gasoline or low-flash point solvents to clean them.

CAUTION

Immediately dry the bolts and nuts with compressed air after cleaning.
Clean and dry the bolts and nuts completely.

- Install new bolts in reused connecting rods.
- Dent both bolt head and bolt tip with a punch as shown.
- Before tightening, use a point micrometer [A] to measure the length of new connecting rod bolts and record the values to find the bolt stretch.
  Connecting Rod [B]
  Mark here with a punch [C].
  Nuts [D]
  Fit micrometer pins into punch marks [E].
- Apply a small amount of engine oil to the threads.
- Tighten the big end nuts until the bolt elongation reaches the length specified in the table.
- Check the length [F] of the connecting rod bolts.

★If the stretch is more than the usable range, the bolt has stretched too much. An overelongated bolt may break in use.

Bolt Length after tightening − Bolt Length before tightening = Stretch

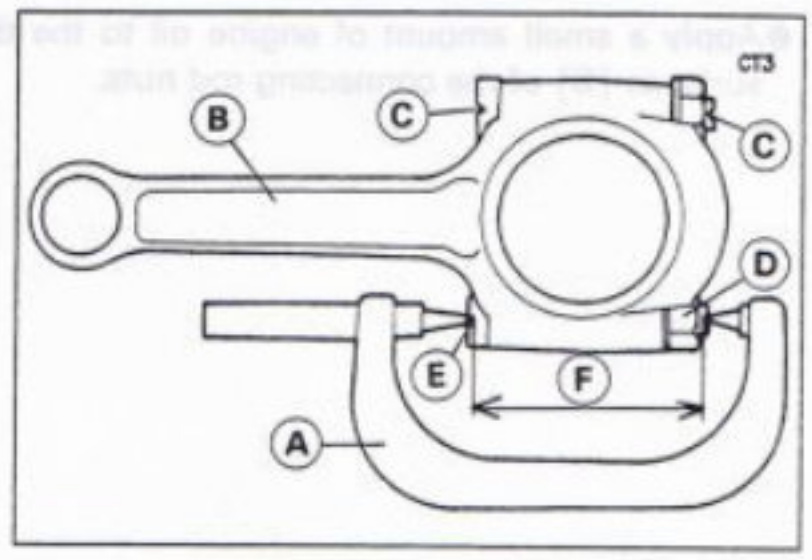

Connecting Rod Assy	Bolt	Nut	Usable Range of Connecting Rod Bolt Stretch
New	Use the bolts attached to new con-rod	Attached to new con-rod	0.22 ~ 0.30 mm
		New	
Used	Replace the bolts with new ones.	Used	0.22 ~ 0.30 mm
		New	

(2) Rotation Angle Method

★If you don't have a point micrometer, you may tighten the nuts using the "Rotation Angle Method".

●Be sure to clean the bolts, nuts, and connecting rods thoroughly with high-flash point solvent, because the new connecting rods, bolts, and nuts are treated with an anti-rust solution.

⚠WARNING

Clean the bolts, nuts, and connecting rods in a well-ventilated area, and take care that there is no spark or flame anywhere near the working area. This includes any appliance with a pilot light. Because of the danger of highly flammable liquids, do not use gasoline or low-flash point solvents to clean them.

CAUTION

Immediately dry the bolts and nuts with compressed air after cleaning.
Clean and dry the bolts and nuts completely.

●Apply a small amount of engine oil to the threads [A] and seating surfaces [B] of the connecting rod nuts.

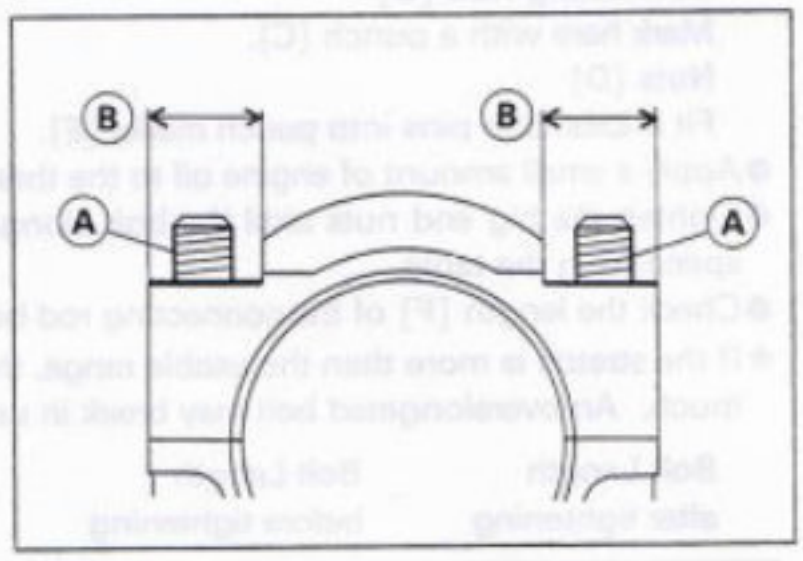

●First, tighten the nuts to the specified torque. See the table below.
●Next, tighten the nuts **120°** more.
○Mark [A] the connecting rod big end caps and nuts so that nuts can be turned 120° [B] properly.
○Tighten the hexagon nut by 2 corners.

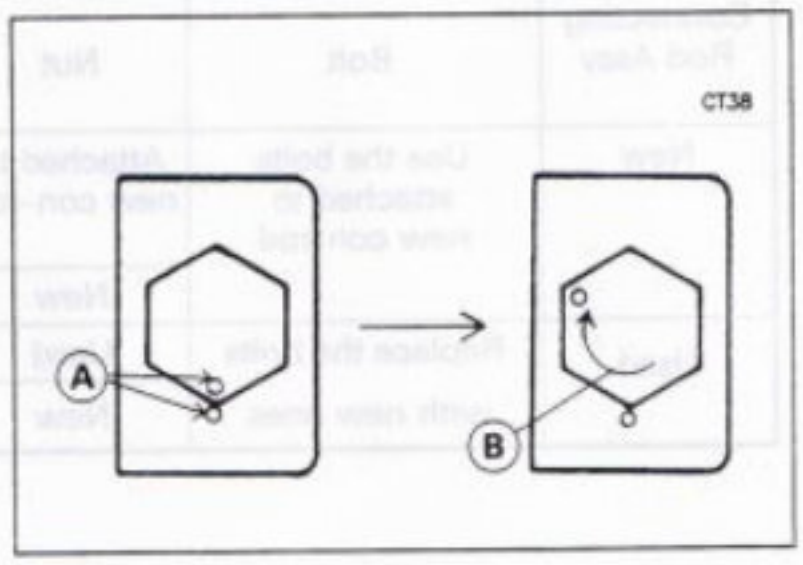

Connecting Rod	Bolt	Nut	Torque + Angle N-m (kg-m, ft-lb)
New	Use the bolts attached to new con-rod.	Attached to new con-rod	15 (1.5, 11.0) + 120°
		New	15 (1.5, 11.0) + 120°
Used	Replace the bolts with new ones	Used	15 (1.5 , 11.0) + 120°
		New	15 (1.5, 11.0) + 120 °

Crankshaft/Connecting Rod Cleaning

- After removing the connecting rods from the crankshaft, clean them with a high-flash point solvent.
- Blow the crankshaft oil passages with compressed air to remove any foreign particles or residue that may have accumulated in the passages.

Connecting Rod Bend

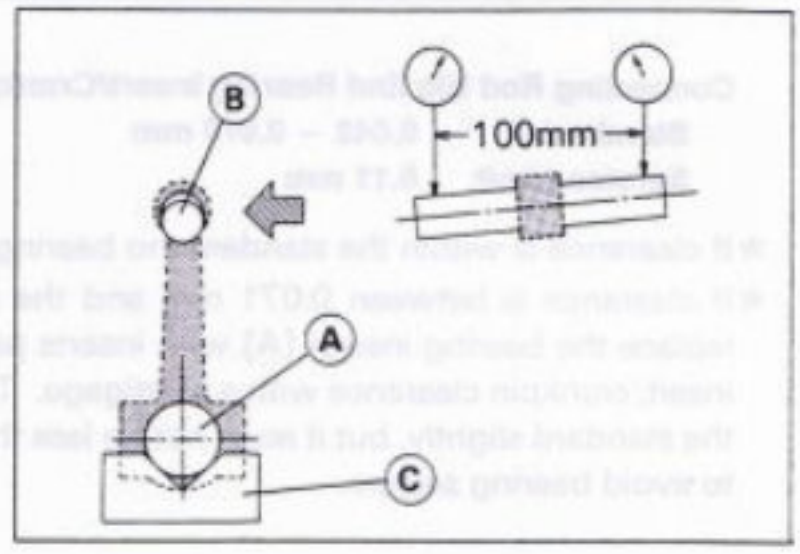

- Remove the connecting rod big end bearing inserts, and reinstall the connecting rod big end cap.
- Select an arbor [A] of the same diameter as the connecting rod big end, and insert the arbor through the connecting rod big end.
- Select an arbor of the same diameter as the piston pin and at least 100 mm long, and insert the arbor [B] through the connecting rod small end.
- On a surface plate, set the big-end arbor on V blocks [C].
- With the connecting rod held vertically, use a height gauge to measure the difference in the height of the arbor above the surface plate over a 100 mm length to determine the amount of connecting rod bend.

★If connecting rod bend exceeds the service limit, the connecting rod must be replaced.

Connecting Rod Bend
Service Limit: 0.2/100 mm

Connecting Rod Twist

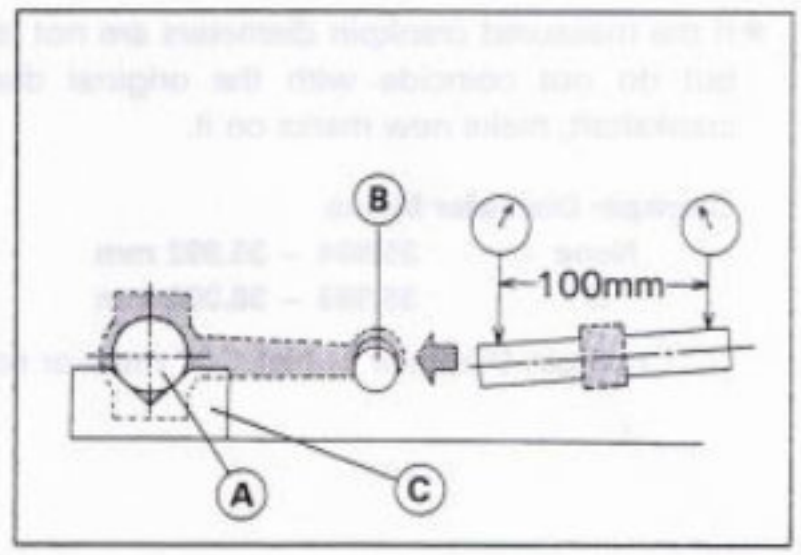

- With the big-end arbor [A] still on V blocks [C], hold the connecting rod horizontally and measure the amount that the arbor [B] varies from being parallel with the surface plate over a 100 mm length of the arbor to determine the amount of connecting rod twist.

★If connecting rod twist exceeds the service limit, the connecting rod must be replaced.

Connecting Rod Twist
Service Limit: 0.2/100 mm

Connecting Rod Big End Side Clearance

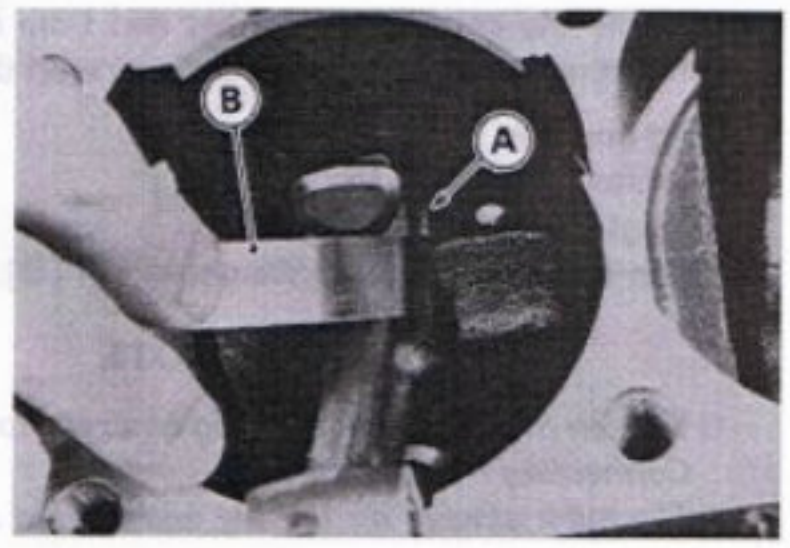

- Measure connecting rod big end side clearance [A].

○Insert a thickness gauge [B] between the big end and either crank web to determine clearance.

Connecting Rod Big End Side Clearance
Standard: 0.13 ~ 0.38 mm
Service Limit: 0.58 mm

★If the clearance exceeds the service limit, replace the connecting rod with new one and then check clearance again. If clearance is too large after connecting rod replacement, the crankshaft also must be replaced.

Connecting Rod Big End Bearing Insert/Crankpin Wear

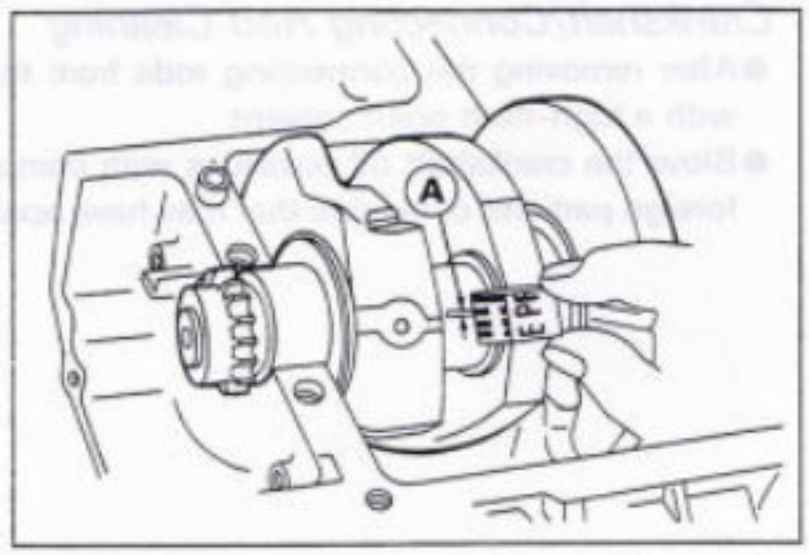

- Using a plastigage (press gauge) [A], measure the bearing insert/crankpin clearance.

NOTE

○ *Tighten the big end nuts to the specified torque.*
○ *Do not move the connecting rod and crankshaft during clearance measurement.*

CAUTION
After measurement, replace the connecting rod bolts.

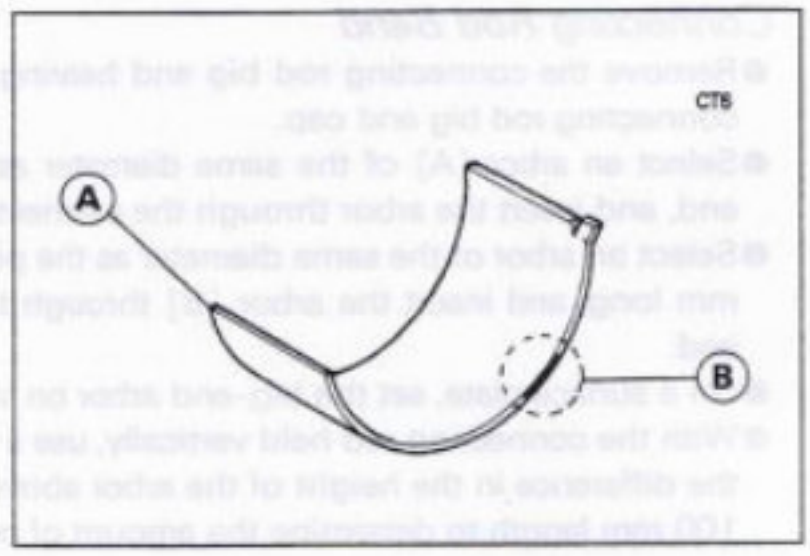

Connecting Rod Big End Bearing Insert/Crankpin Clearance

Standard:	**0.042 ~ 0.070 mm**
Service Limit:	**0.11 mm**

★If clearance is within the standard, no bearing replacement is required.
★If clearance is between 0.071 mm and the service limit (0.11 mm), replace the bearing inserts [A] with inserts painted white [B]. Check insert/crankpin clearance with a plastigage. The clearance may exceed the standard slightly, but it must not be less than the minimum in order to avoid bearing seizure.

★If the clearance exceeds the service limit, measure the diameter of the crankpins.

Crankpin Diameter

Standard:	**35.984 ~ 36.000 mm**
Service Limit:	**35.97 mm**

★If any crankpin has worn past the service limit, replace the crankshaft with a new one.

★If the measured crankpin diameters are not less than the service limit, but do not coincide with the original diameter markings on the crankshaft, make new marks on it.

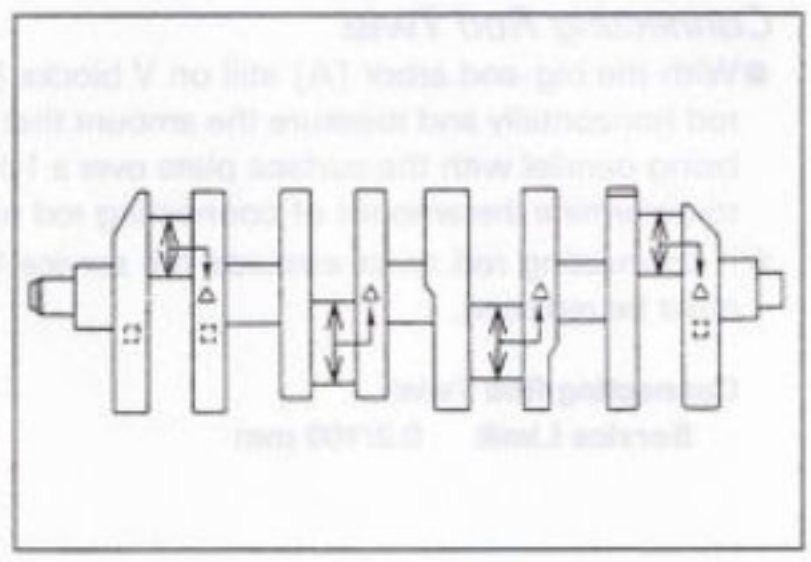

Crankpin Diameter Marks

None	**35.984 ~ 35.992 mm**
○	**35.993 ~ 36.000 mm**

△: Crankpin Diameter Marks, "○" mark or no mark.

- Measure the connecting rod big end bore diameter, and mark each connecting rod big end in accordance with the bore diameter.

Big End Cap [A]
Connecting Rod [B]
Weight Mark, Alphabet [C]
Diameter Mark (Around Weight Mark) [D]: "○" or no mark

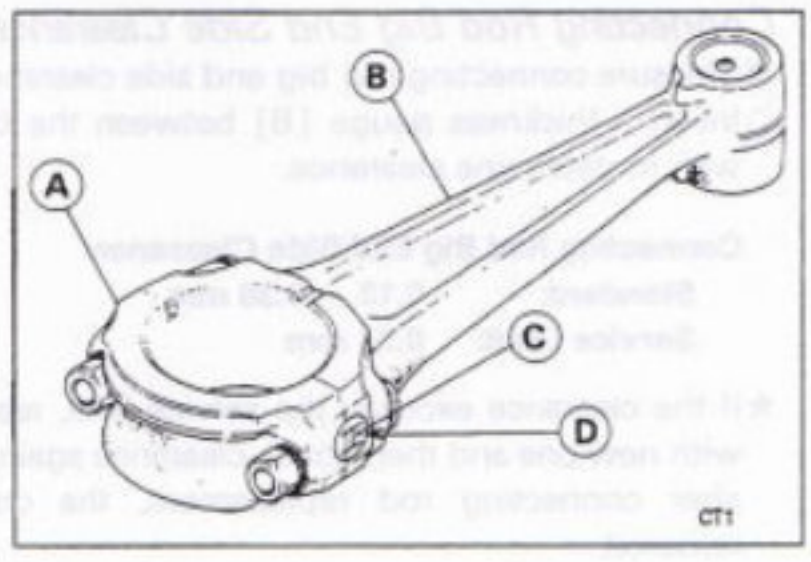

NOTE

○ *Tighten the connecting rod big end nuts to the specified torque (see Connecting Rod Installation).*
○ *The mark already on the big end should almost coincide with the measurement.*

Connecting Rod Big End Bore Diameter

None	39.000 ~ 39.008 mm
○	39.009 ~ 39.016 mm

- Select the proper bearing insert in accordance with the combination of the connecting rod and crankshaft coding.
- Install the new inserts in the connecting rod and check insert/crankpin clearance with the plastigage.

Con-rod Big End Bore Diameter Marking	Crankpin Diameter Mark	Bearing Insert	
		Size Color	Part Number
None	○	Black	92028-1679
None	None	Blue	92028-1680
○	○		
○	None	White	92028-1681

Crankshaft Side Clearance

- Insert a thickness gauge between the crankcase main bearing and the crank web at the No.2 journal [A] to determine clearance [B].

★If the clearance exceeds the service limit, replace the crankcase halves and main bearing cap as a set.

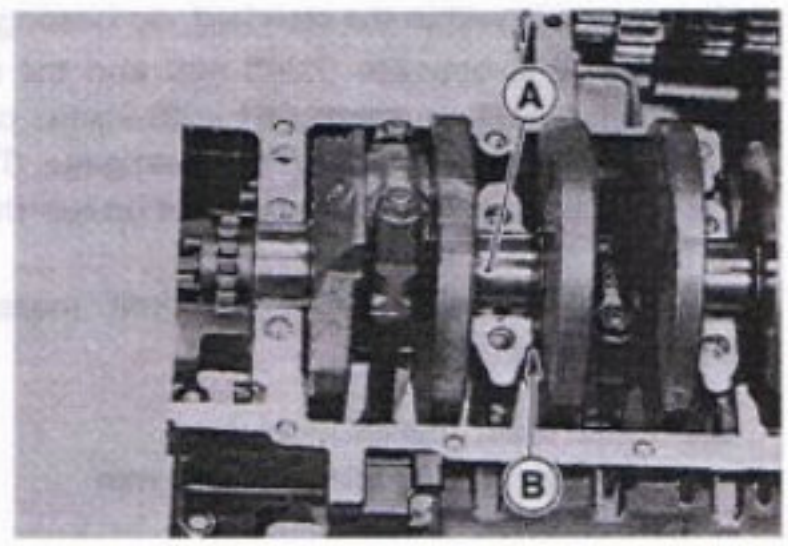

CAUTION

The upper crankcase half, lower crankcase half, and main bearing cap are machined at the factory in the assembled state, so they must be replaced as a set.

Crankshaft Side Clearance

Standard:	**0.05 ~ 0.20 mm**
Service Limit:	**0.40 mm**

Crankshaft Runout

- Measure the crankshaft runout.

★If the measurement exceeds the service limit, replace the crankshaft.

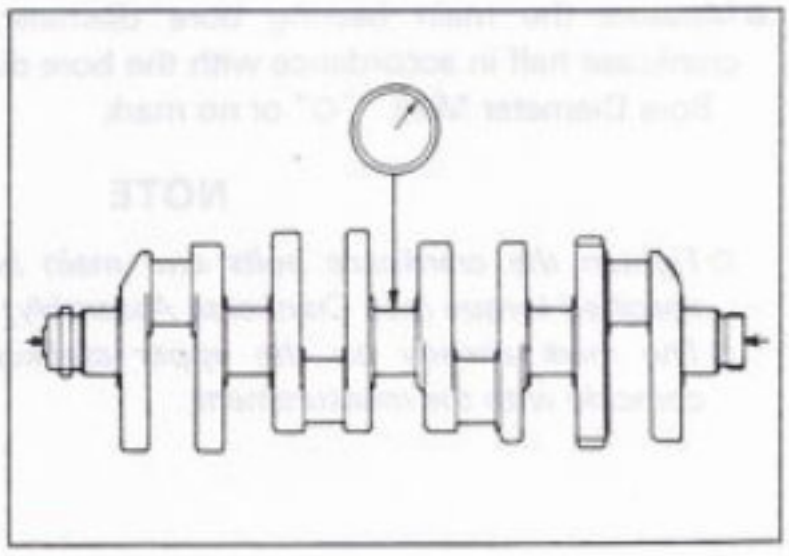

Crankshaft Runout

Standard:	**TIR 0.02 mm or less**
Service Limit:	**TIR 0.05 mm**

Crankshaft Main Bearing Insert/Journal Wear

- Using a plastigage (press gauge) [A], measure the bearing insert/journal [B] clearance.

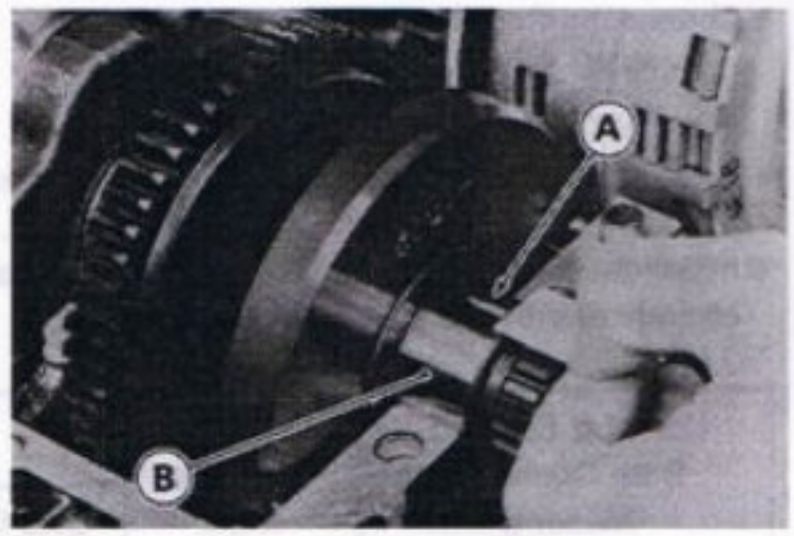

NOTE

- *Tighten the crankcase bolts and main bearing cap bolts to the specified torque (see Crankcase Assembly).*
- *Do not turn the crankshaft during clearance measurement.*
- *Journal clearance less than 0.025 mm can not be measured by plastigauge, however, using genuine parts maintain the minimum standard clearance.*

Crankshaft Main Bearing Insert/Journal Clearance

Standard:	**0.020 ~ 0.044 mm**
Service Limit:	**0.08 mm**

★If clearance is within the standard, no bearing replacement is required.

★If clearance is between 0.045 mm and the service limit (0.08 mm), replace the bearing inserts [A] with inserts painted blue [B]. Check insert/journal clearance with the plastigage. The clearance may exceed the standard slightly, but it must not be less than the minimum in order to avoid bearing seizure.

★If clearance exceeds the service limit, measure the diameter of the crankshaft main journal.

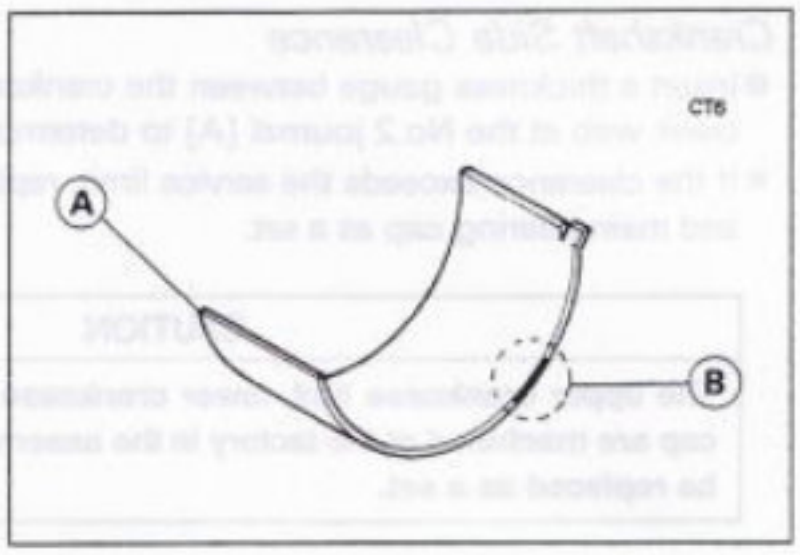

Crankshaft Main Journal Diameter

Standard:	**35.984 ~ 36.000 mm**
Service Limit:	**35.96 mm**

★If any journal has worn past the service limit, replace the crankshaft with a new one.

★If the measured journal diameters are not less than the service limit, but do not coincide with the original diameter markings on the crankshaft, make new marks on it.

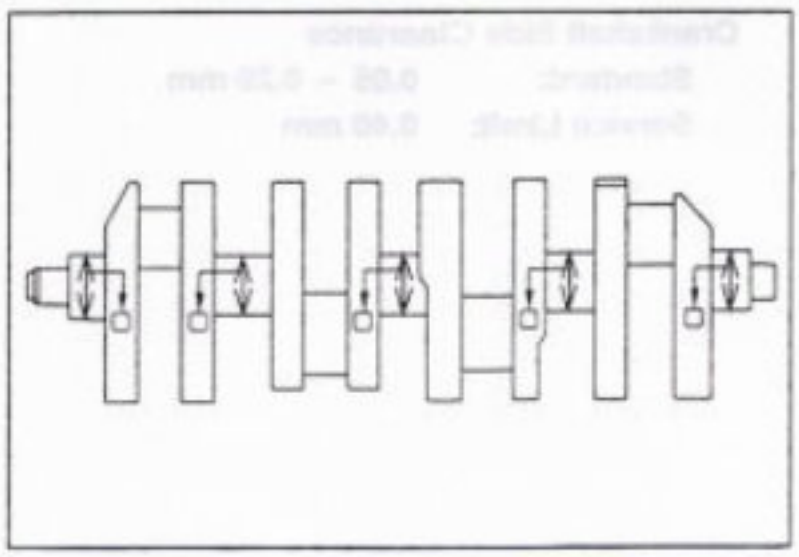

Crankshaft Main Journal Diameter Marks

None	**35.984 ~ 35.992 mm**
1	**35.993 ~ 36.000 mm**

□: Crankshaft Main Journal Diameter Marks, "1" mark or no mark

- Measure the main bearing bore diameter, and mark the upper crankcase half in accordance with the bore diameter.
  Bore Diameter Mark : "○" or no mark

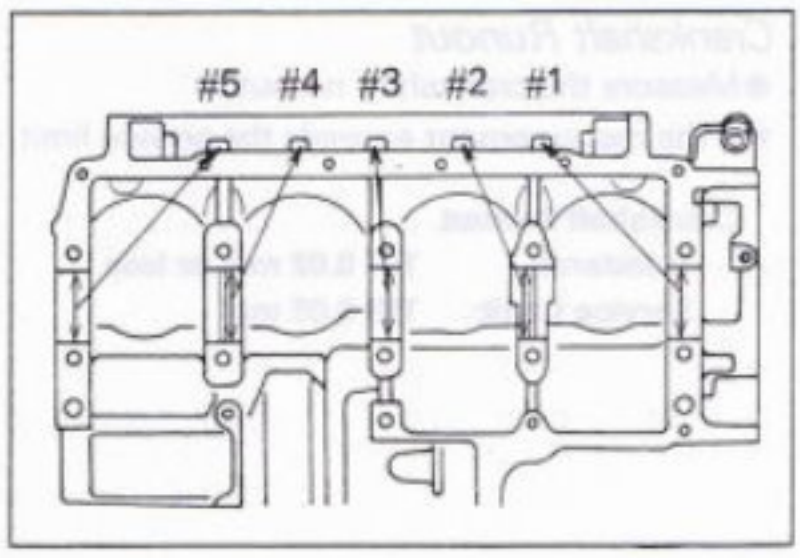

NOTE

- *Tighten the crankcase bolts and main bearing cap bolts to the specified torque (see Crankcase Assembly).*
- *The mark already on the upper crankcase half should almost coincide with the measurement.*

Crankcase Main Bearing Bore Diameter

○	39.000 ~ 39.008 mm
None	39.009 ~ 39.016 mm

- Select the proper bearing insert in accordance with the combination of the crankcase and crankshaft coding.
- Install the new inserts in the crankcase halves and cap and check insert/journal clearance with a plastigage.

Crankcase Main Bearing Bore Diameter Marking	Crankshaft Main Journal Diameter Marking	Bearing Insert*		
		Size Color	Part Number	Journal Nos.
○	1	Brown	92028-1274	1, 3, 5
			92028-1102	2, 4
None	1	Black	92028-1273	1, 3, 5
○	None		92028-1101	2, 4
None	None	Blue	92028-1272	1, 3, 5
			92028-1100	2, 4

*The bearing inserts for Nos. 2 and 4 journals have an oil groove, respectively.

Balancer

Balancer Removal

- Split the crankcase (see this chapter).
- Unscrew the balancer shaft clamp bolt [A], and balancer shaft clamp lever bolt[B], and pull off the clamp lever [C].

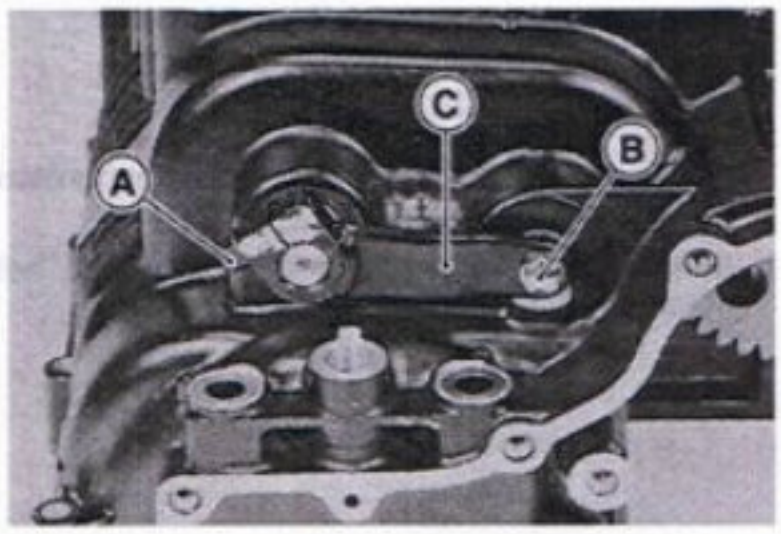

- Unscrew the balancer shaft plate bolt [A], and take off the plate [B] and guide pin [C].

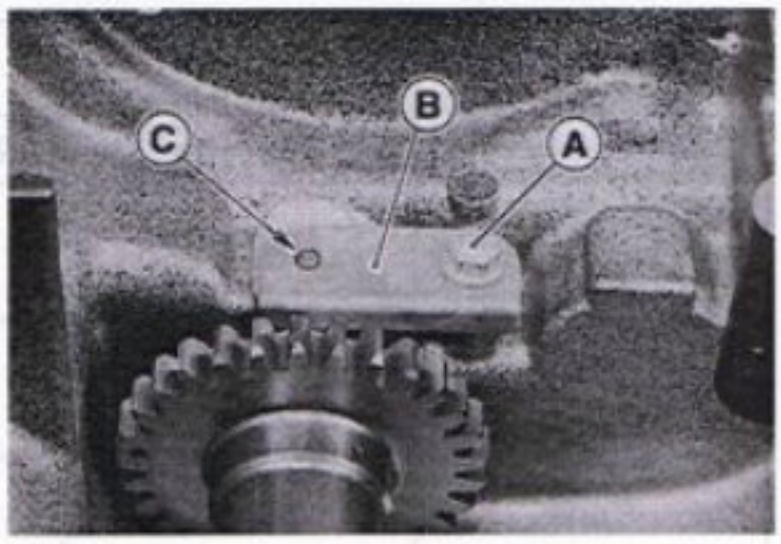

- Push [A] the balancer shaft [B] toward the right out of the crankcase. The balancer weight and gear assembly [C] come off with the balancer shaft and the oil seal.

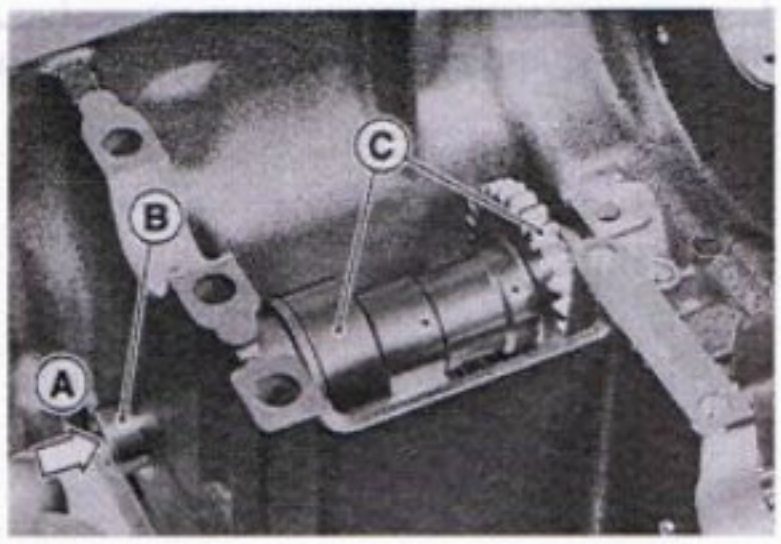

Balancer Installation

- Check that the rubber dampers [A] are in place as shown.
- Install the balancer weight [B] into the gear shaft [C].

○ Any engagement of the vanes will do.

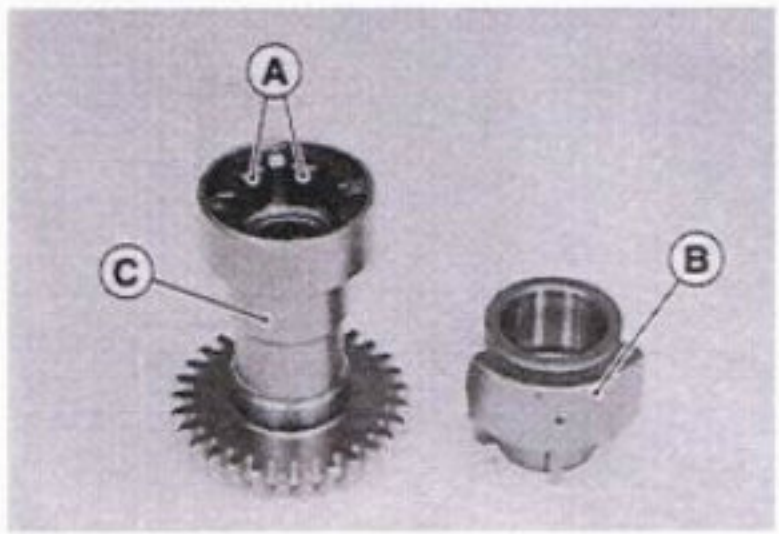

- Fit the copper washers [A] on both ends of the weight and gear assembly. The projected sides [B] face inward.
- Install the weight and gear assembly.
- Install the balancer shaft plate and guide pin.
- Apply a non-permanent locking agent to the threads of the plate bolt, and tighten it.

Torque – Balancer Shaft Plate Bolt : 9.8 N-m (1.0 kg-m, 87 in-lb)

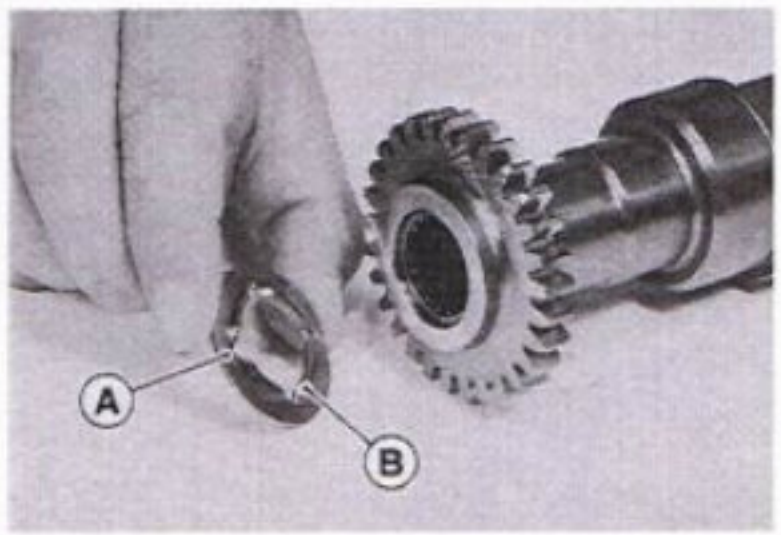

●Turn the balancer shaft, so the punch mark [A] is toward the front. And then install the clamp lever.

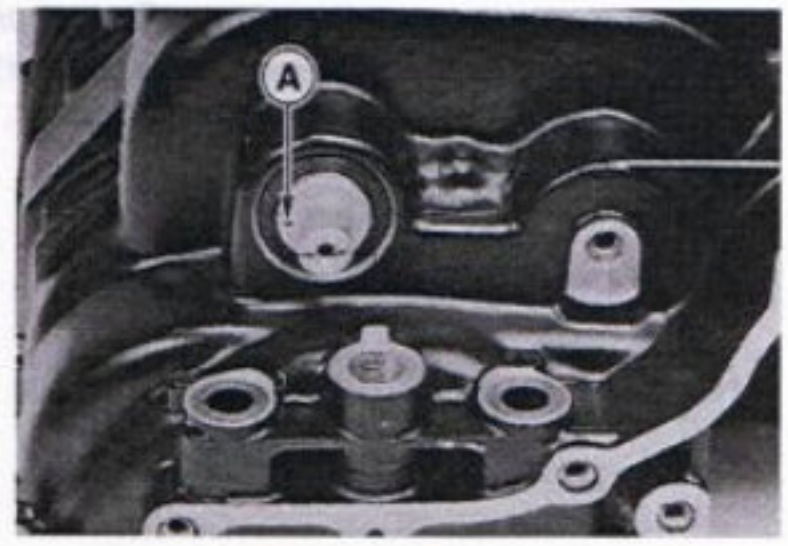

●Apply a non-permanent locking agent to the threads of the balancer shaft lever bolt [A] and tighten it.

Torque – Balancer Shaft Clamp Lever Bolt : 9.8 N-m (1.0 kg-m, 87 in-lb)

●Tighten the clamp bolt [B].

Torque – Balancer Shaft Clamp Bolt : 9.8 N-m (1.0 kg-m, 87 in-lb)

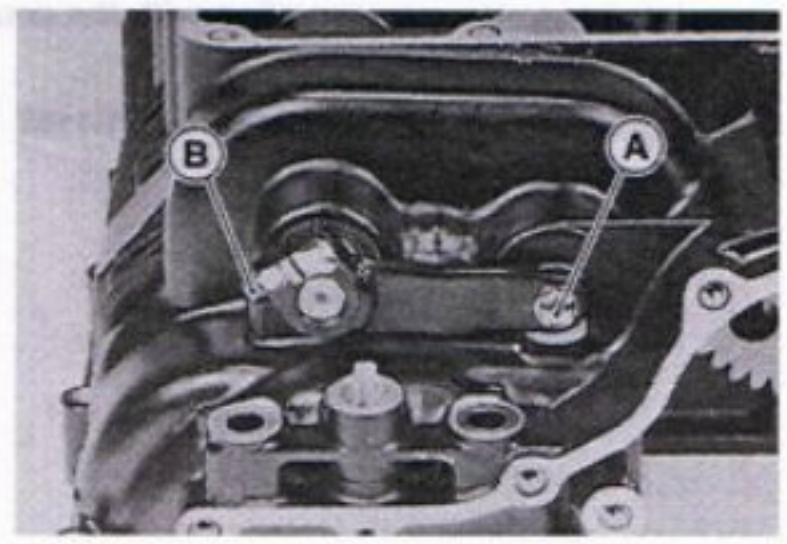

●Adjust the balancer gear backlash with the engine idling. The amount of backlash can be changed by turning the balancer shaft which has eccentric journals.

○Start the engine and let it idle.

○Loosen the clamp bolt [A] and turn the balancer shaft [B] counter-clockwise until the balancer gear makes a noise.

○Turn the shaft clockwise until the balancer gear noise lowers the most, and tighten the clamp bolt.

Torque – Balancer Shaft Clamp Bolt : 9.8 N-m (1.0 kg-m, 87 in-lb)

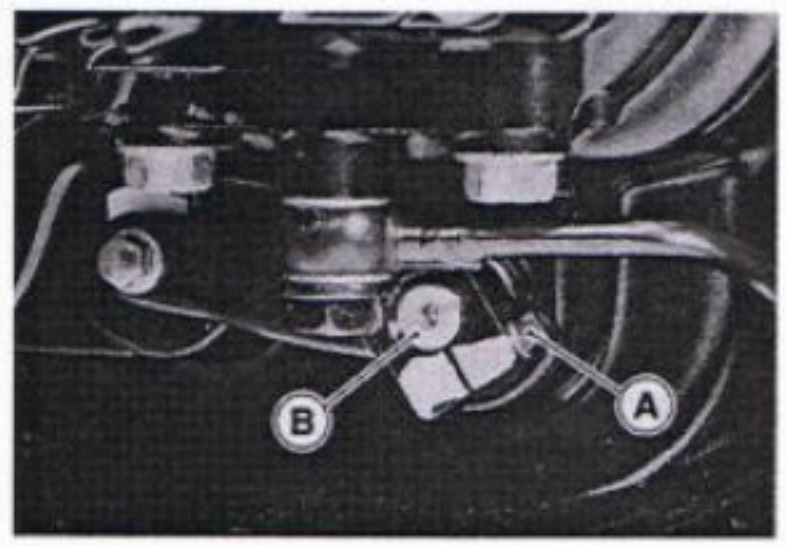

Balancer Damper Inspection

●Remove the balancer and disassemble the weight and gear assembly.

●Visually inspect the rubber dampers [A].

★If they appear damaged or deteriorated, replace them.

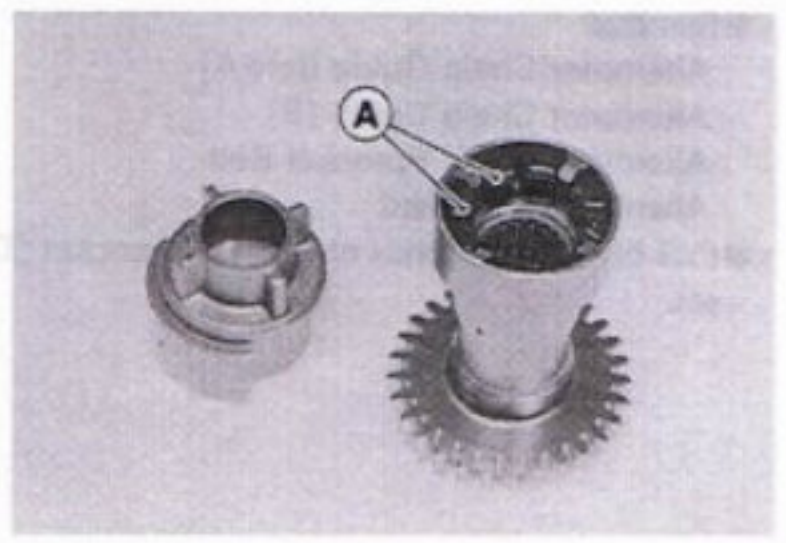

Alternator Shaft/Starter Motor Clutch

Alternator Chain and Tensioner Removal

- Remove the clutch cover (see Clutch chapter).
- Loosen the alternator chain sprocket bolt[A].

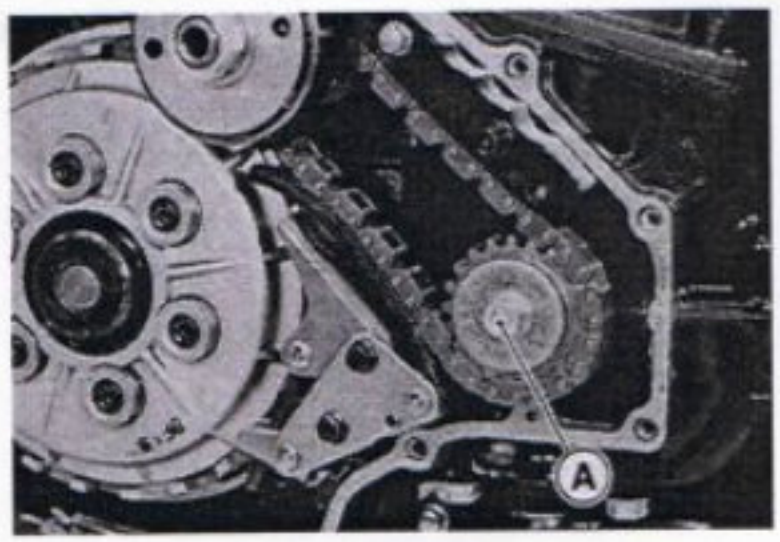

- Holding the alternator coupling with the coupling holder [A], loosen the alternator shaft nut [B].

  Special Tool – Coupling Holder: 57001-1189

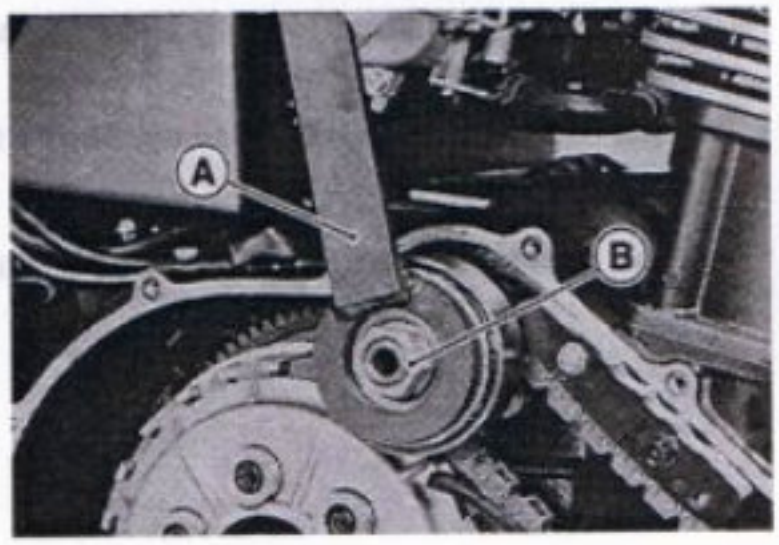

- Remove:
  Alternator Chain Tensioner Bolts[A]
  Alternator Chain Tensioner [B]

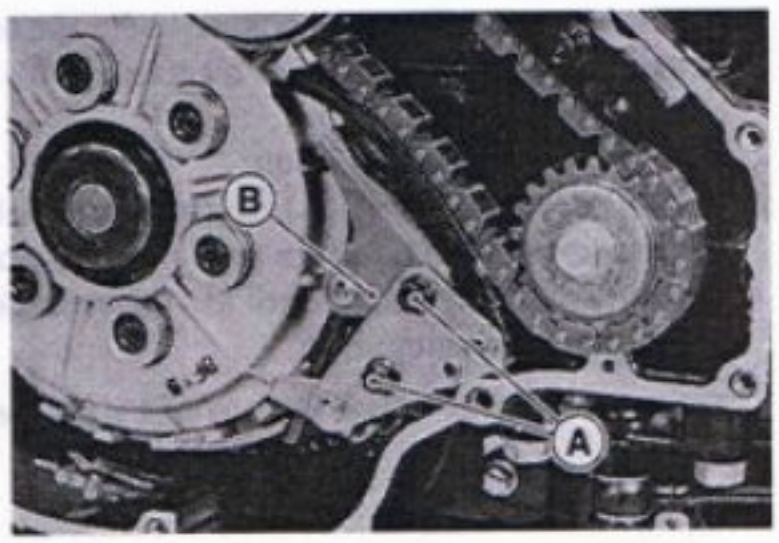

- Remove:
  Alternator Chain Guide Bolt[A]
  Alternator Chain Guide [B]
  Alternator Chain Sprocket Bolt
  Alternator Shaft Nut
- Pull off the alternator chain [C], sprocket [D], and coupling [E] as a set.

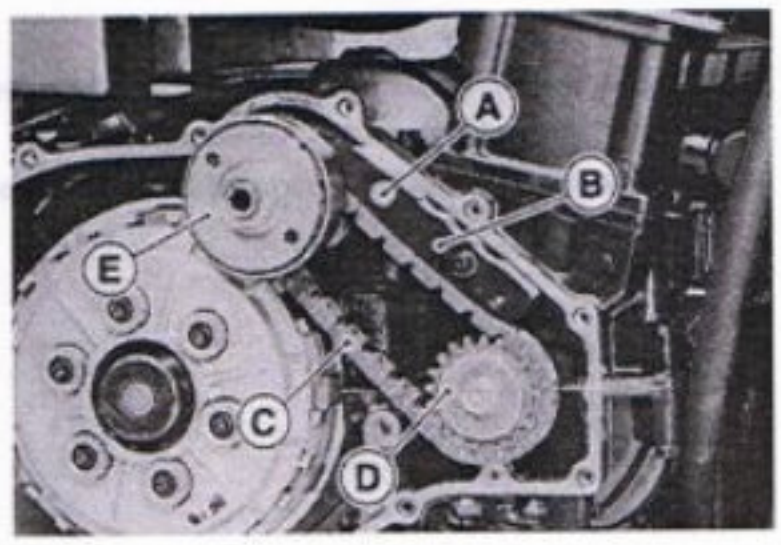

Alternator Chain and Tensioner Installation

- Tighten the alternator shaft nut and alternator chain sprocket bolt.

  Special Tool – Coupling Holder: 57001-1189
  Non-permanent Locking Agent – Alternator Chain Guide Bolt
  Torque – Alternator Shaft Nut: 59 N-m (6.0 kg-m, 43 ft-lb)
  Alternator Chain Sprocket Bolt: 25 N-m (2.5 kg-m, 18.0 ft-lb)
  Alternator Chain Guide Bolt: 9.8 N-m (1.0 kg-m, 87 in-lb)

- Lock the alternator chain tensioner as follows.
  - ○ Push the tensioner guide [A] and the rod stop lever [B] so that the stop lever keeps the rod [C] from returning.
- Install the chain tensioner.
- Apply a non-permanent locking agent to the threads of the alternator chain tensioner bolts and tighten them.

Torque – Alternator Chain Tensioner Bolts : 9.8 N-m (1.0 kg-m, 87 in-lb)

- Free the tensioner by tapping the rod stop lever lightly with a screwdriver.

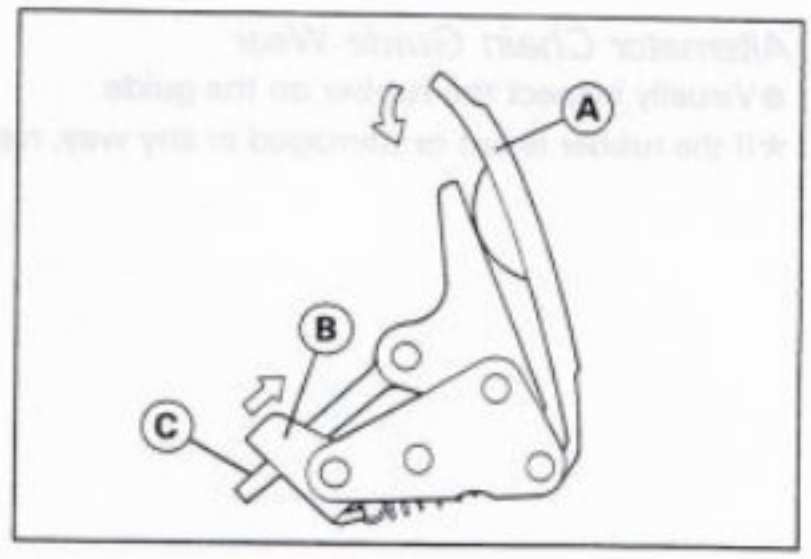

Alternator Shaft Removal

- Split the crankcase (see this chapter).
- Keeping the alternator shaft from turning with the coupling holder, remove the alternator shaft bolt [A] and coupling [B].

Special Tool – Coupling Holder: 57001-1189

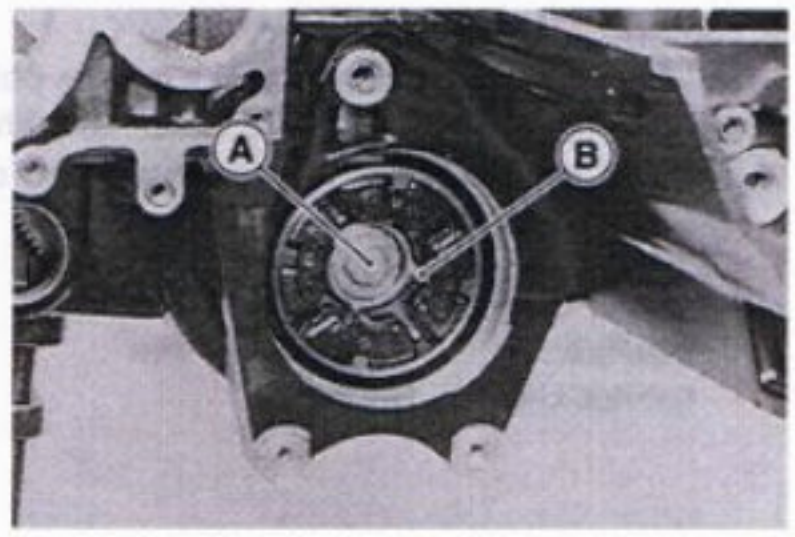

- Holding the starter motor clutch [A], pull the alternator shaft [B] off the crankcase.
- Remove the starter motor idle gear [C].

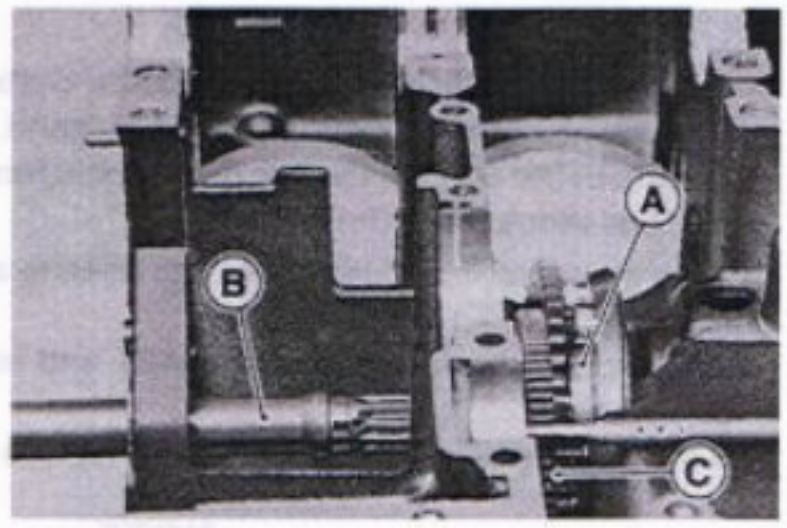

Alternator Shaft Installation

- Install the starter motor idle gear [A] as shown.
- Tighten the alternator shaft bolt.

Special Tool – Coupling Holder: 57001-1189

Torque – Alternator Shaft Bolt : 25 N-m (2.5 kg-m, 18.0 ft-lb)

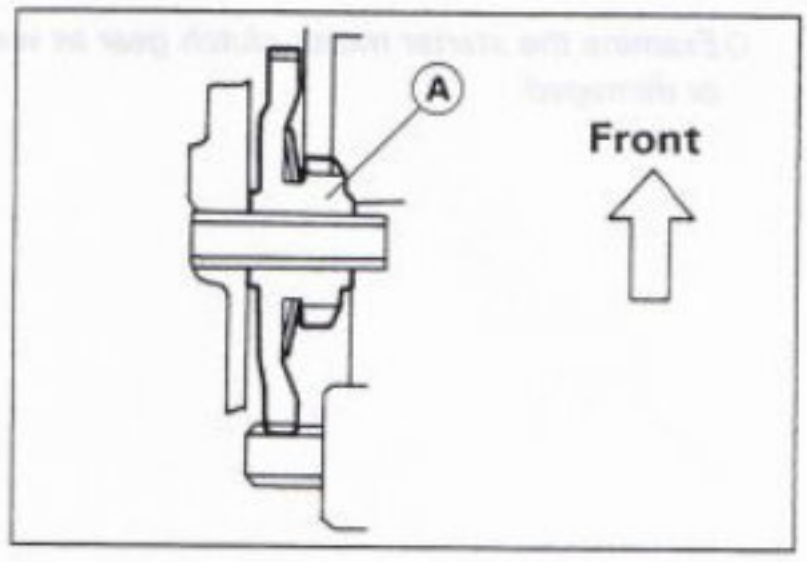

Coupling Damper Inspection

- Visually inspect the rubber dampers [A] in the couplings at both ends of the alternator shaft.

★ If they appear damaged or deteriorated, replace them.

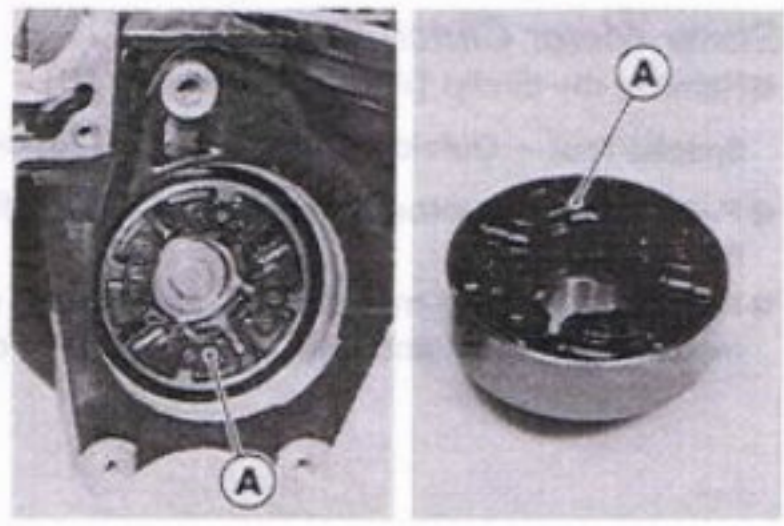

Alternator Chain Guide Wear

- Visually inspect the rubber on the guide.

★If the rubber is cut or damaged in any way, replace the guide.

Alternator Chain Wear

- Hold the alternator chain so that it may be pulled tight.
- Measure the length of 20 links (21 pins) with a vernier caliper.

★If the 20-link length of the alternator shaft chain is greater than the service limit, replace it.

Alternator Chain 20-link length

Standard:	**158.8 ~ 159.2 mm**
Service Limit:	**161.0 mm**

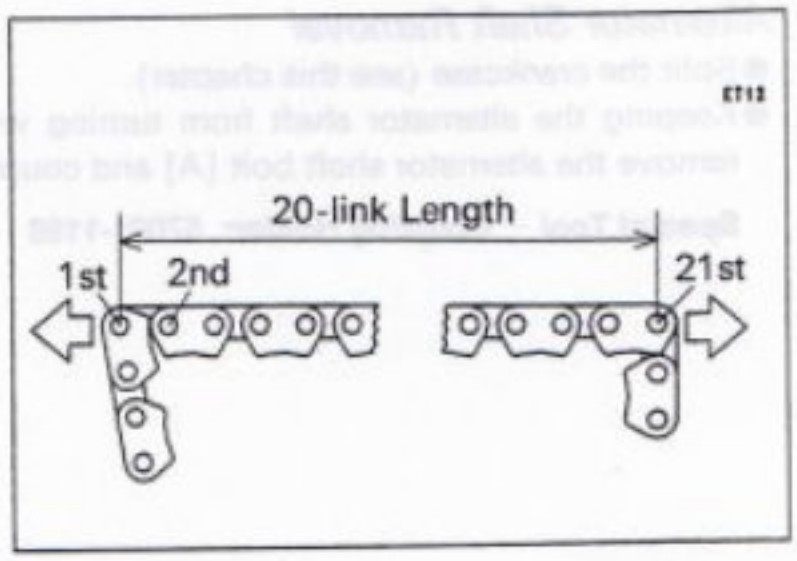

Starter Motor Clutch Inspection

- Remove the starter motor (see Electrical System chapter).
- Turn the starter motor idle gear [A] by hand. When viewed from the left side of the engine, the idle gear should turn counterclockwise freely [B], but should not turn clockwise.

★If the starter motor clutch does not operate as it should or if it makes noise, go to the next step.

- Disassemble the starter motor clutch, and visually inspect the clutch parts.
- If there is any worn or damaged part, replace it.

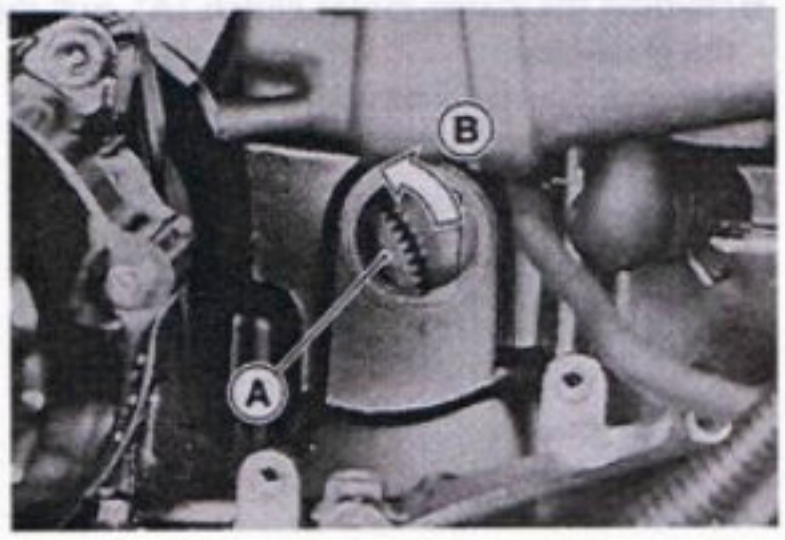

NOTE

○*Examine the starter motor clutch gear as well. Replace it if is worn or damaged.*

Starter Motor Clutch Disassembly

- Remove the circlip [A] and flat washer [B].

Special Tool – Outside Circlip Pliers: 57001-144

- Pull the starter motor clutch gear and take off the needle bearing and flat washer.
- Holding the starter motor clutch assembly in a vise, remove the starter motor clutch bolts and take off the one-way clutch.

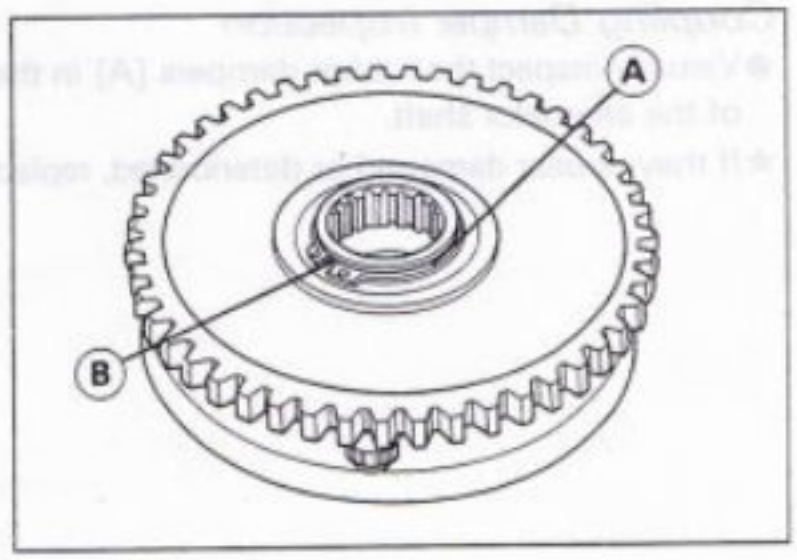

Starter Motor Clutch Assembly

- Be sure to install the one-way clutch [A] so that its flange [B] fits in the holder recess [C].
- Apply a non-permanent locking agent to the threads of the starter motor clutch bolts, and tighten them.

Torque – Starter Motor Clutch Bolts: 12 N-m (1.2 kg-m, 104 in-lb)
Special Tool – Outside Circlip Pliers: 57001-144

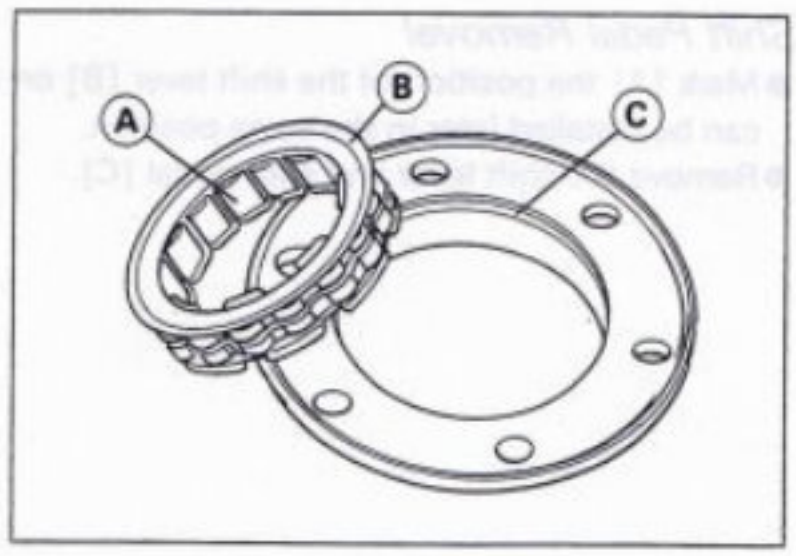

Transmission

Shift Pedal Removal

- Mark [A] the position of the shift lever [B] on the shift shaft so that it can be installed later in the same position.
- Remove the shift lever and shift pedal [C].

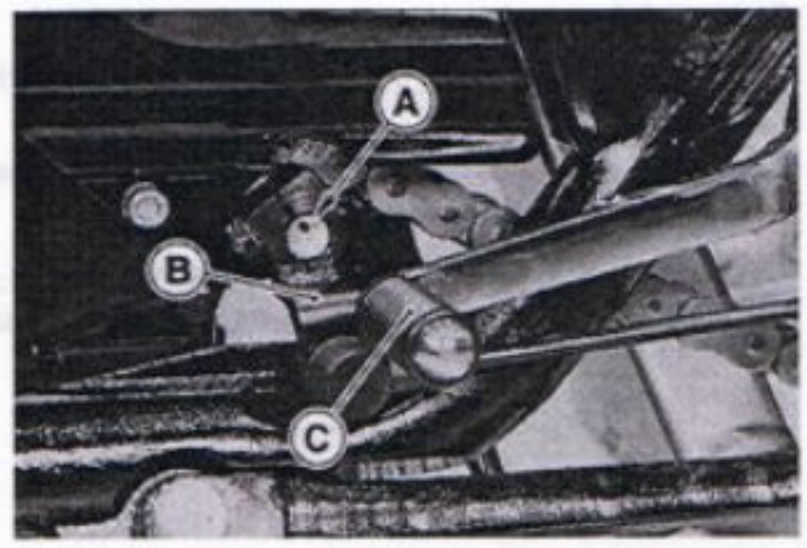

Shift Pedal Installation

- Install the shift pedal [A] so that the shift rod [B] is at a right angle to the shift lever [C] and shift pedal lever [D].
- Loosen the front and rear rod locknuts [E].

○ The front locknut has left-hand threads.

- Turn the rod to adjust the pedal position.
- Tighten the locknuts securely.

★ If necessary, adjust the pedal position from the standard to suit the rider.

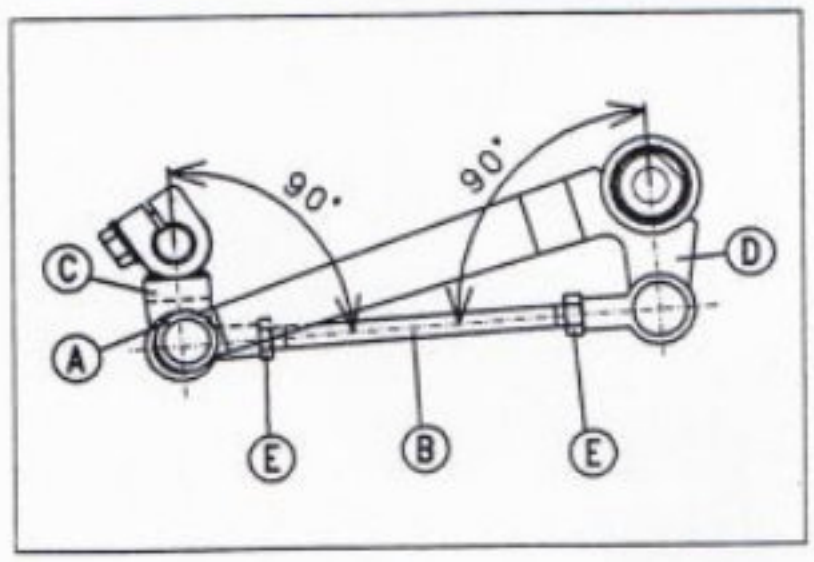

External Shift Mechanism Removal

- Remove:

  Water Pump (see Cooling System chapter)
  Engine Sprocket (see Final Drive chapter)
  Rear Wheel (see Wheels/Tires chapter)
  Shift Lever [A]
  Oil Pressure Switch Lead Connector [B]
  Side Stand Switch Lead Connector [C]
  Neutral Switch Lead Connector [D]
  Cover Bolts [E]
  External Shift Mechanism Cover [F]

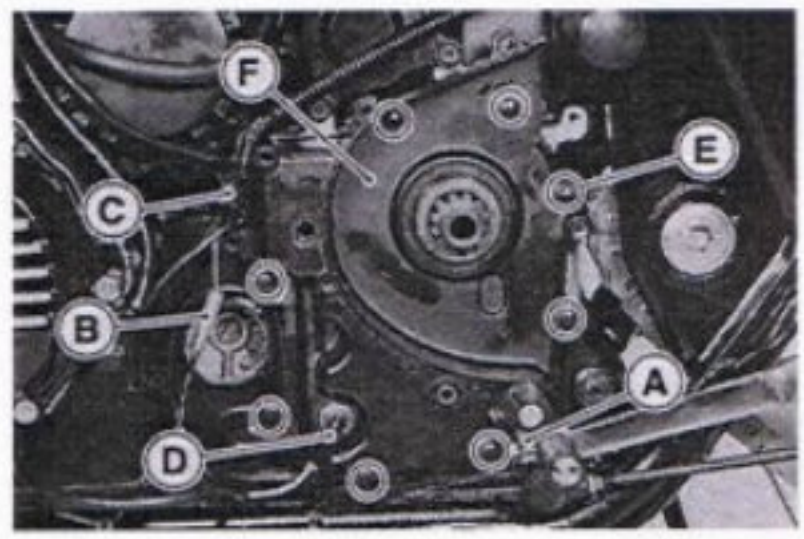

NOTE

○ *Place an oil pan beneath the external shift mechanism cover.*

○ Position the links [A] of the drive chain as shown, and remove the cover [B].

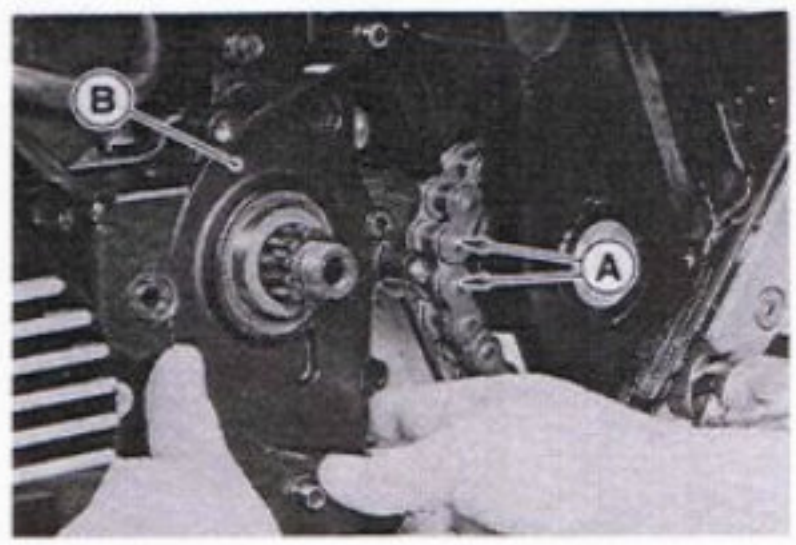

- Remove the shift shaft [A], while pushing [B] the shift mechanism arm [C] toward the shaft.

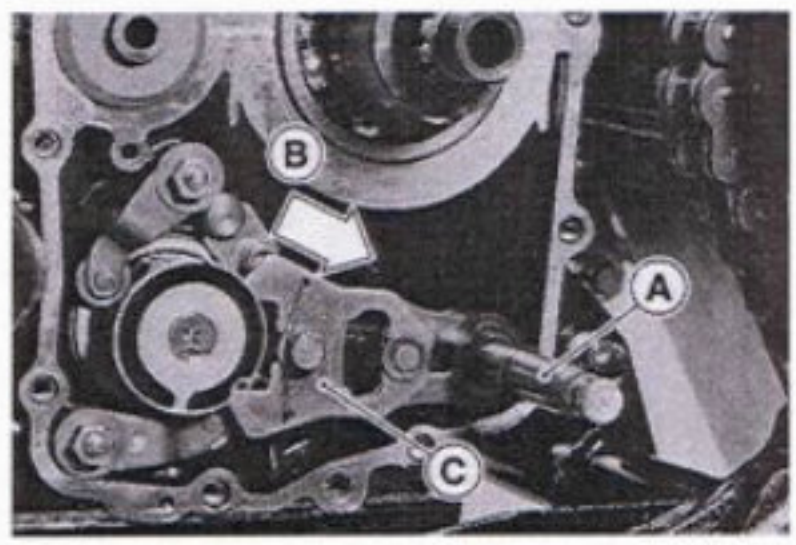

- Remove:
  Neutral Set Lever [A]
  Return Spring [B]
  Gear Set Lever [C]
  Return Spring [D]

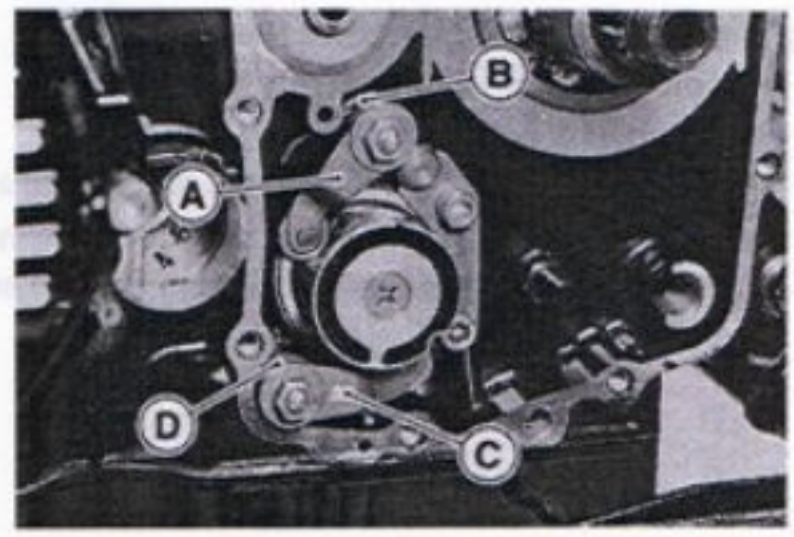

External Shift Mechanism Installation

○ The gear set lever [A] has a white mark and its return spring [B] has a blue mark.
○ The neutral set lever [C] has no mark and its return spring [D] has a green mark.
○ Be careful not to mix up these parts.
  Shift Drum [E]

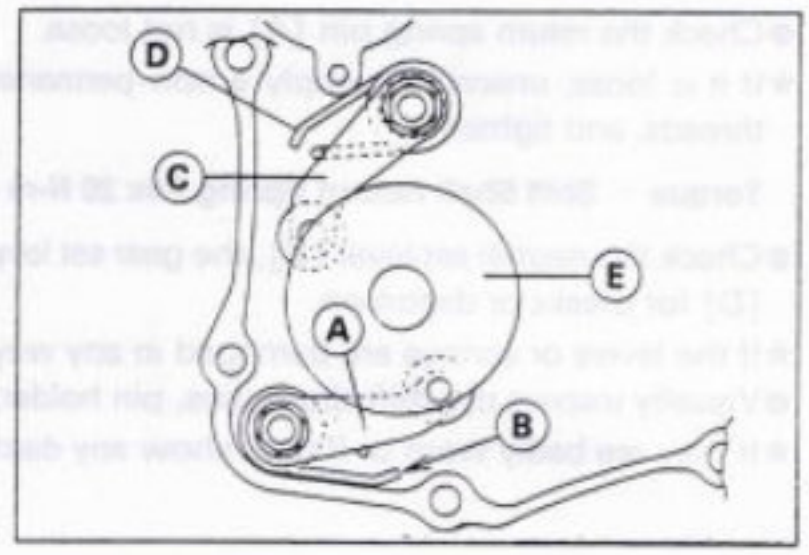

- Apply silicone sealant [A] to the crankcase halves mating surface on the front and rear sides of the external shift mechanism cover mount.

  Sealant – Kawasaki Bond (Silicone Sealant): 56019-120

- Be sure to install the washer [B].

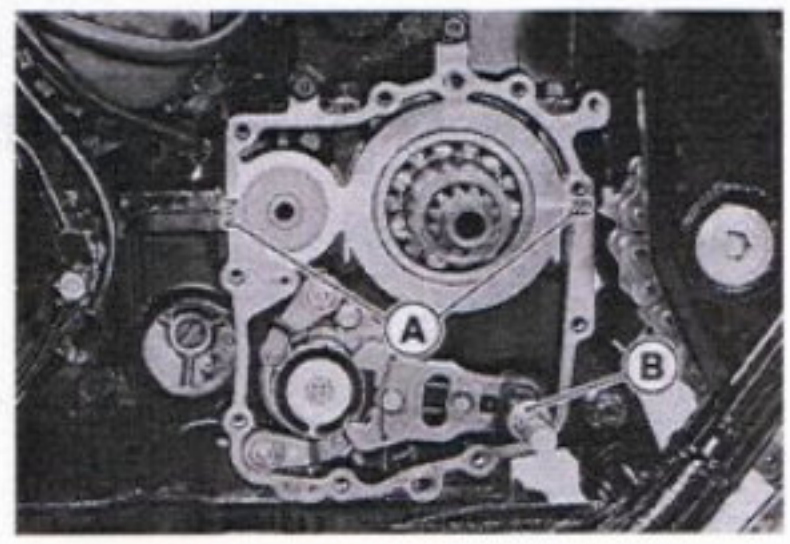

- Replace the cover gasket with a new one.
- Apply high temperature grease to the oil seal lips.
- Install the cover and tighten the cover bolts.
- Apply a non-permanent locking agent to the cover bolts [A] shown.

  Torque – External Shift Mechanism Cover Bolts : 9.8 N-m (1.0 kg-m, 87 in-lb)

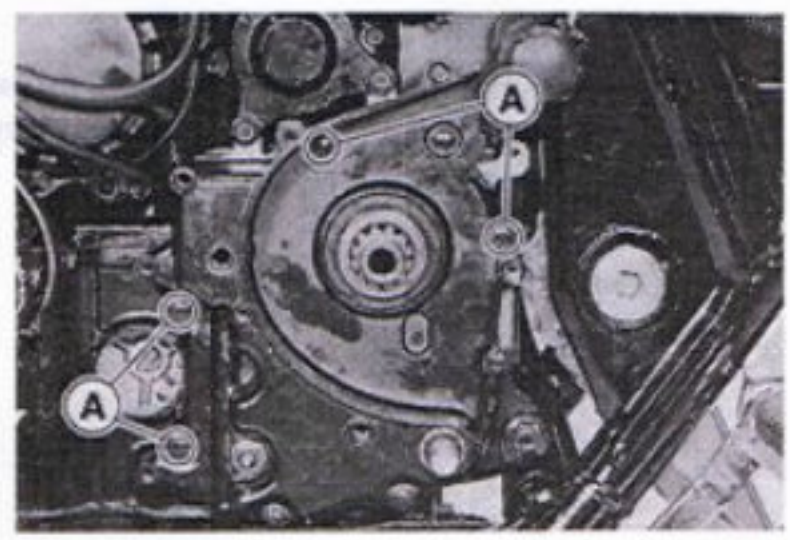

- Install:
  Water Pump (see Cooling System chapter)
  Engine Sprocket (see Final Drive chapter)
  Drive Chain
  Rear Wheel (see Wheels/Tires chapter)
- Adjust the shift pedal position (see this chapter).
- Fill:
  Engine Oil (see Engine Lubrication System chapter)
  Coolant (see Cooling System chapter)

External Shift Mechanism Inspection

- Examine the shift shaft [A] for any damage.
- ★If the shaft is bent, straighten or replace it.
- ★If the serration [B] are damaged, replace the shaft.
- ★If the springs [C] [D] are damaged in any way, replace them.
- ★If the shift mechanism arm [E] is damaged in any way, replace the arm.

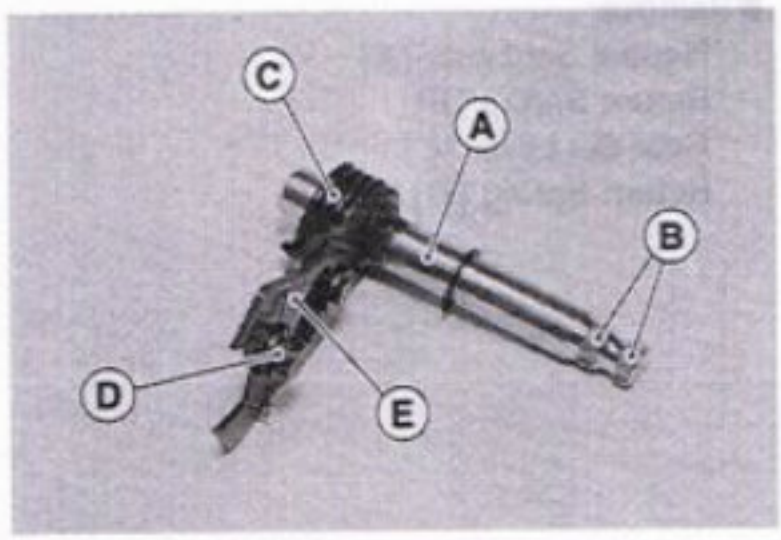

- Check the return spring pin [A] is not loose.
- ★If it is loose, unscrew it, apply a non-permanent locking agent to the threads, and tighten it.

Torque – Shift Shaft Return Spring Pin: 20 N-m (2.0 kg-m, 14.5 ft-lb)

- Check the neutral set lever [B], the gear set lever [C], and their springs [D] for breaks or distortion.
- ★If the levers or springs are damaged in any way, replace them.
- Visually inspect the shift drum pins, pin holder, and pin plate.
- ★If they are badly worn or if they show any damage, replace them.

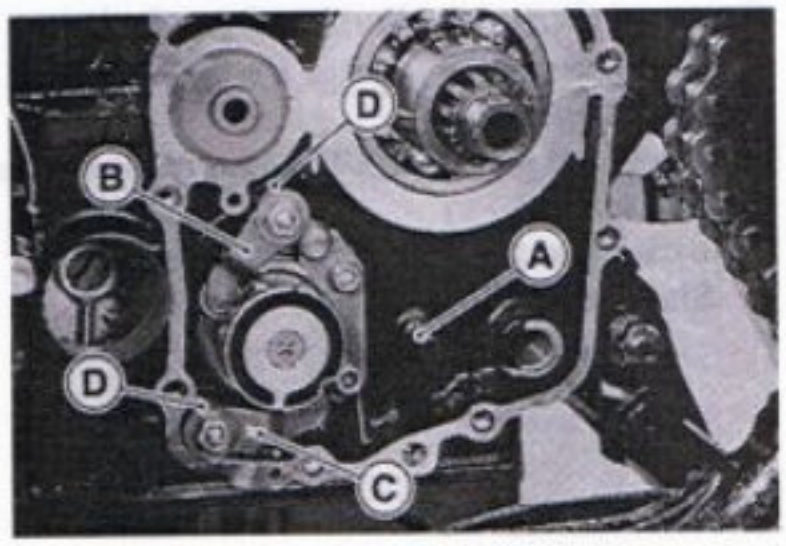

Transmission Shaft Removal

- Split the crankcase (see Crankcase Splitting).
- Remove the drive shaft [A] and output shaft [B].

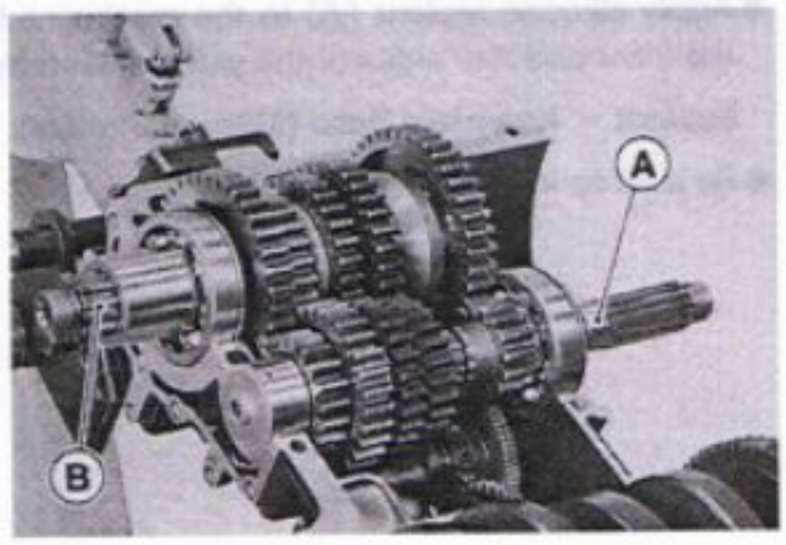

Transmission Shaft Installation

- Blow the oil passages [A] clean with compressed air.
- Check to see that the set rings [B] and set pins [C] are in place in the transmission bearing housings.

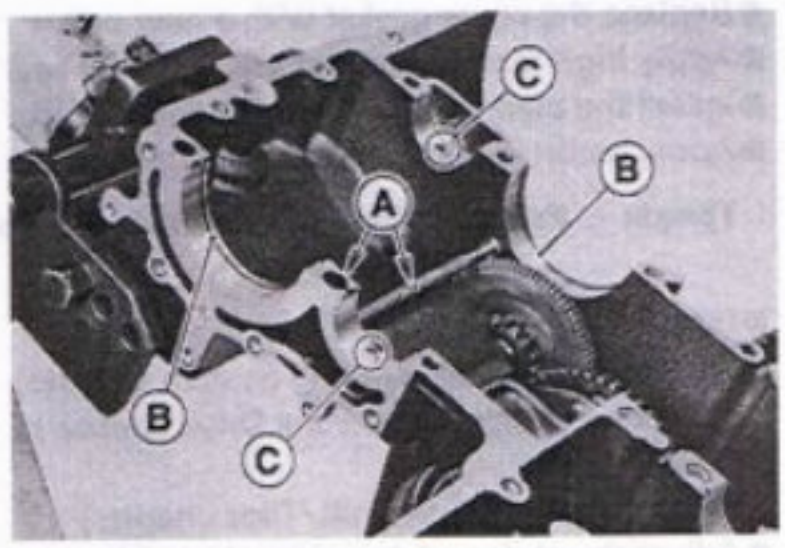

- Install the drive and output shaft assemblies in the upper crankcase half.
- Apply engine oil to the sliding surfaces of the gears and bearings.
- ○The bearing set pins and rings must match properly with the holes or grooves in the bearing outer races. When they are properly matched, there is no clearance between the crankcase and the bearing outer races [A].

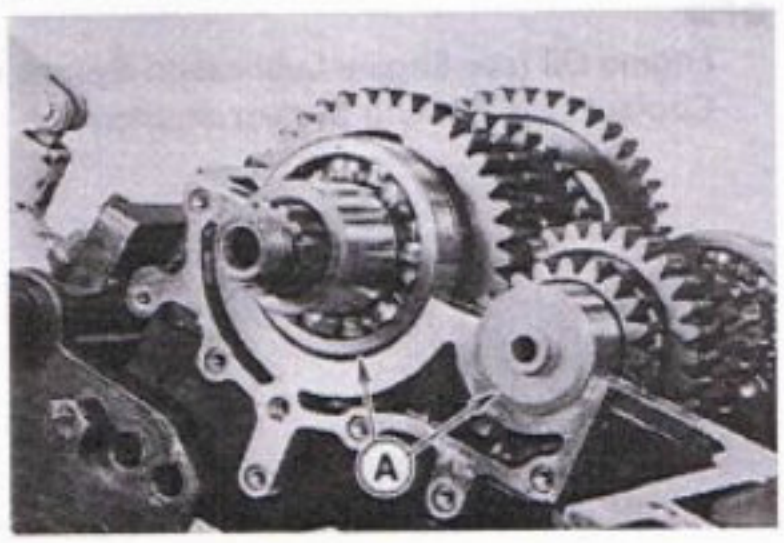

Transmission Disassembly

- Remove the transmission shafts.
- Remove the circlips and disassemble the transmission shafts.

Special Tool – Outside Circlip Pliers: 57001-144

- The shifter [A] on the output shaft has three steel balls assembled into it for the positive neutral finder mechanism.
- Remove the shifter as follows.

○ Set the output shaft in a vertical position holding the 3rd gear [B].
○ Spin [C] the shifter quickly and pull it off upward.

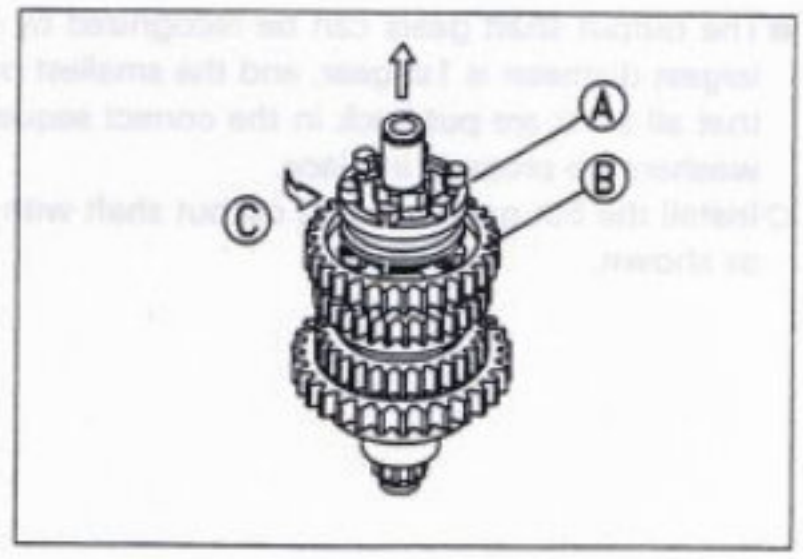

- Remove the ball bearing [A] from each shaft.

Special Tools – Bearing Puller: 57001-135 [B]
Bearing Puller Adapter: 57001-317 [C]

- Discard the bearing.

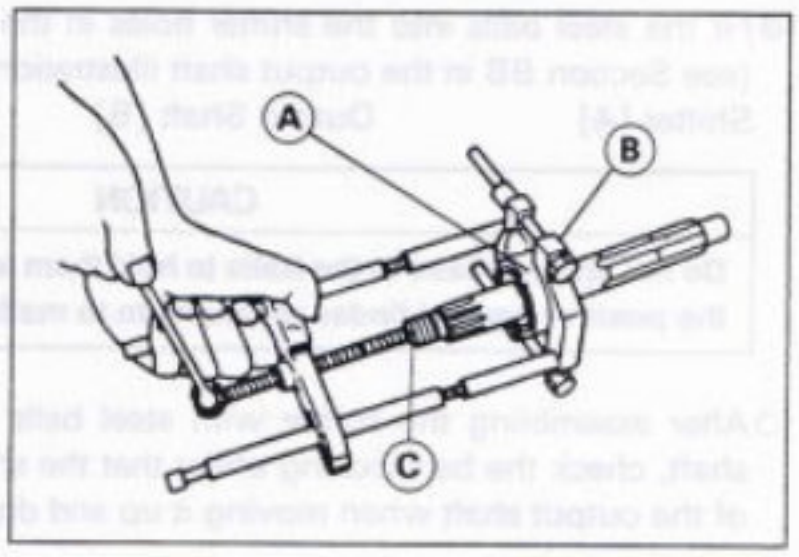

Transmission Assembly

- Install the ball bearing on the drive shaft [A] with the groove [B] toward the clutch side.
- Install the ball bearing on the output shaft [C] with the groove [D] away from the engine sprocket side.

Special Tool – Steering Stem Bearing Driver: 57001-137

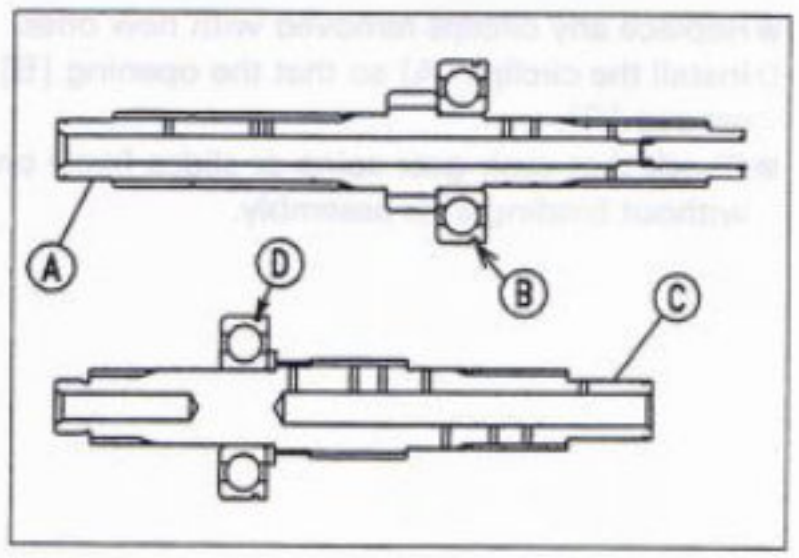

○ Install the 5th gear bushing [A] onto the drive shaft with their holes [B] aligned.

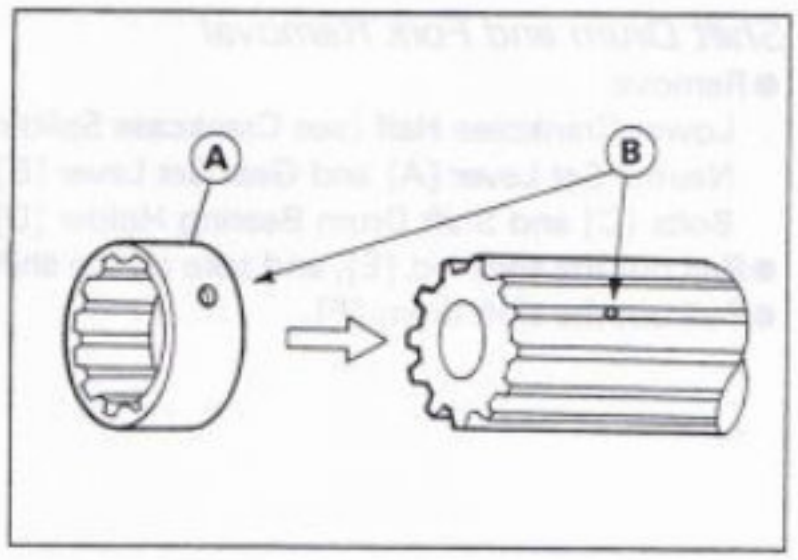

- The drive shaft gears can be recognized by size: the gear with the smallest diameter is 1st gear, and the largest one is 5th gear. Be sure that all parts are put back in the correct sequence and all circlips and washers are properly in place.

○ Install the 3rd/4th gear onto the drive shaft with their holes [A] aligned.

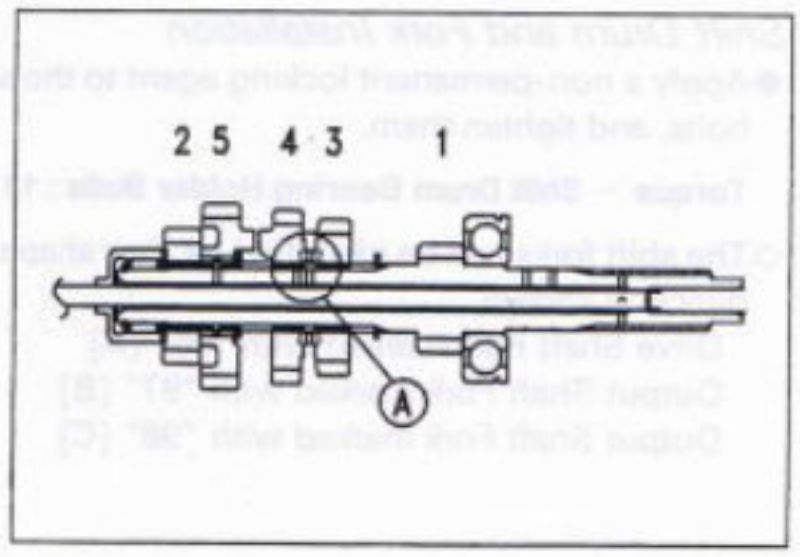

●The output shaft gears can be recognized by size: the gear with the largest diameter is 1st gear, and the smallest one is 5th gear. Be sure that all parts are put back in the correct sequence and all circlips and washers are properly in place.

○Install the 5th gear onto the output shaft with their holes [A] aligned as shown.

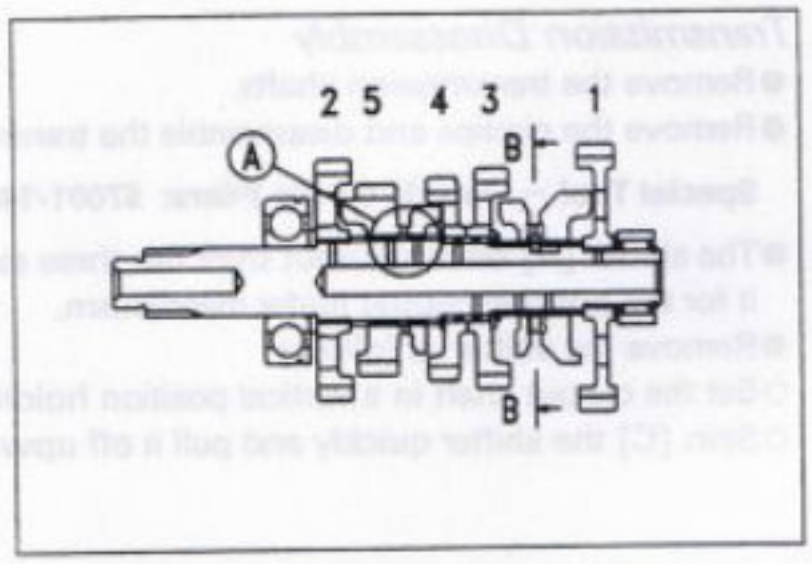

●Fit the steel balls into the shifter holes in the output shaft as shown (see Section BB in the output shaft illustration).

Shifter [A] Output Shaft [B] Steel Balls [C]

CAUTION
Do not apply grease to the balls to hold them in place. This will cause the positive neutral finder mechanism to malfunction.

○After assembling the shifter with steel balls in place on the output shaft, check the ball-locking effect that the shifter does not come out of the output shaft when moving it up and down by hand.

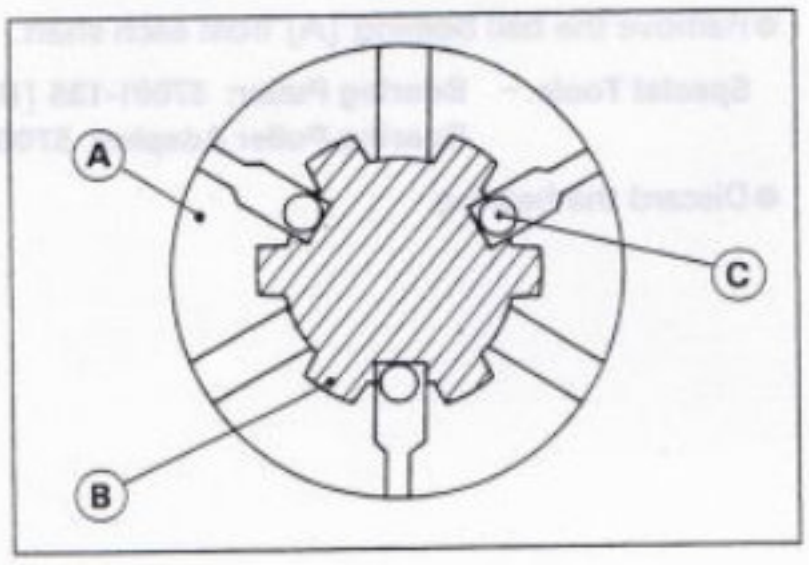

●Replace any circlips removed with new ones.

○Install the circlips [A] so that the opening [B] is aligned with a spline groove [C].

●Check that each gear spins or slides freely on the transmission shafts without binding after assembly.

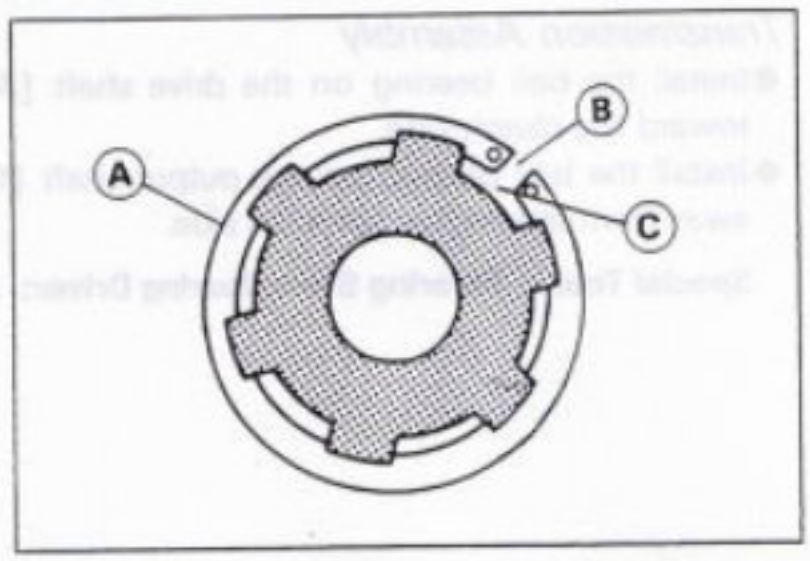

Shift Drum and Fork Removal

●Remove:

Lower Crankcase Half (see Crankcase Splitting)
Neutral Set Lever [A] and Gear Set Lever [B]
Bolts [C] and Shift Drum Bearing Holder [D]

●Pull out the shift rod [E], and take off the shift forks.

●Pull out the shift drum [F].

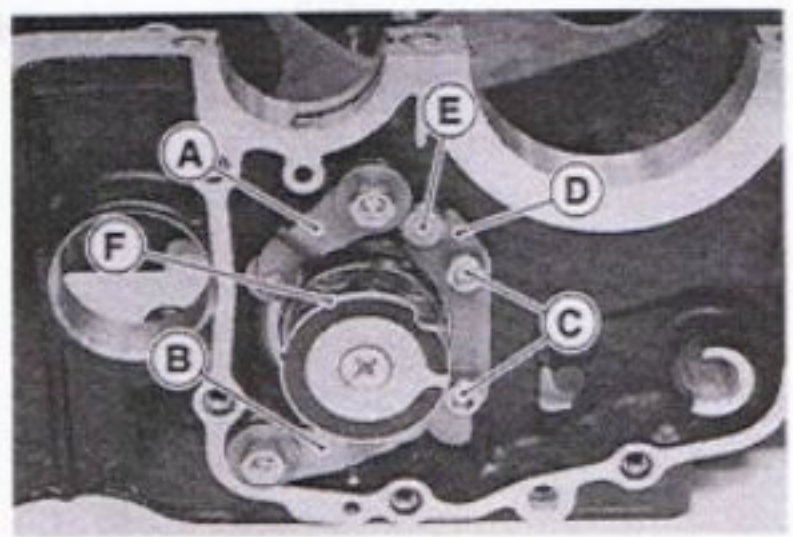

Shift Drum and Fork Installation

●Apply a non-permanent locking agent to the shift drum bearing holder bolts, and tighten them.

Torque – Shift Drum Bearing Holder Bolts : 13 N-m (1.3 kg-m, 113 in-lb)

○The shift forks can be identified by their shape. Install them noting the direction shown.

Drive Shaft Fork marked with "96" [A]
Output Shaft Fork marked with "97" [B]
Output Shaft Fork marked with "98" [C]

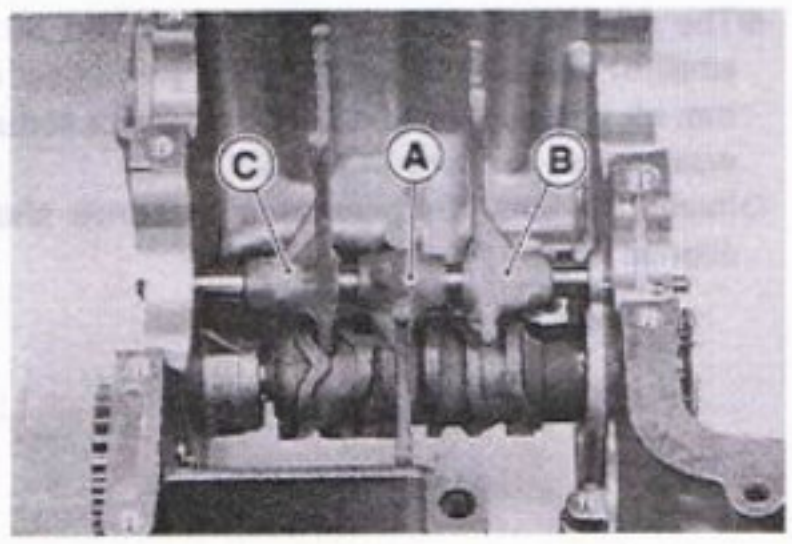

Shift Drum Disassembly

- Remove the shift drum (see Shift Drum and Fork Removal).
- While holding the shift drum with a vise, remove the shift drum cam screw.

  Shift Drum Cam Screw [A]
  Dowel Pins [B]

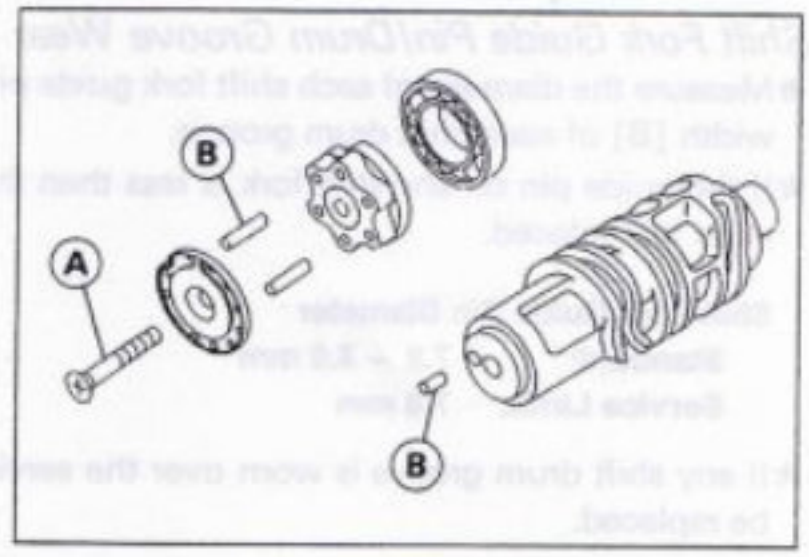

Shift Drum Assembly

- Be sure to install the dowel pins.
- Apply a non-permanent locking agent to the threads of the shift drum cam screw, and tighten it.

Shift Fork Bending

- Visually inspect the shift forks, and replace any fork that is bent. A bent fork could cause difficulty in shifting, or allow the transmission to jump out of gear when under power.

  90° [A]

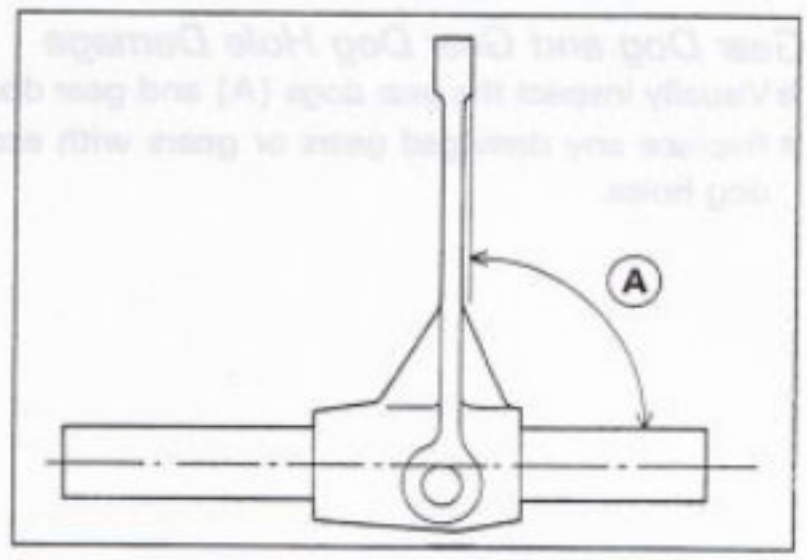

Shift Fork/Gear Groove Wear

- Measure the thickness of the shift fork ears [A], and measure the width [B] of the gear grooves.

★If the thickness of a shift fork ear is less than the service limit, the shift fork must be replaced.

Shift Fork Ear Thickness

Standard:	**4.9 ~ 5.0 mm**
Service Limit:	**4.8 mm**

★If the gear groove is worn over the service limit, the gear must be replaced.

Gear Groove Width

Standard:	**5.05 ~ 5.15 mm**
Service Limit:	**5.25 mm**

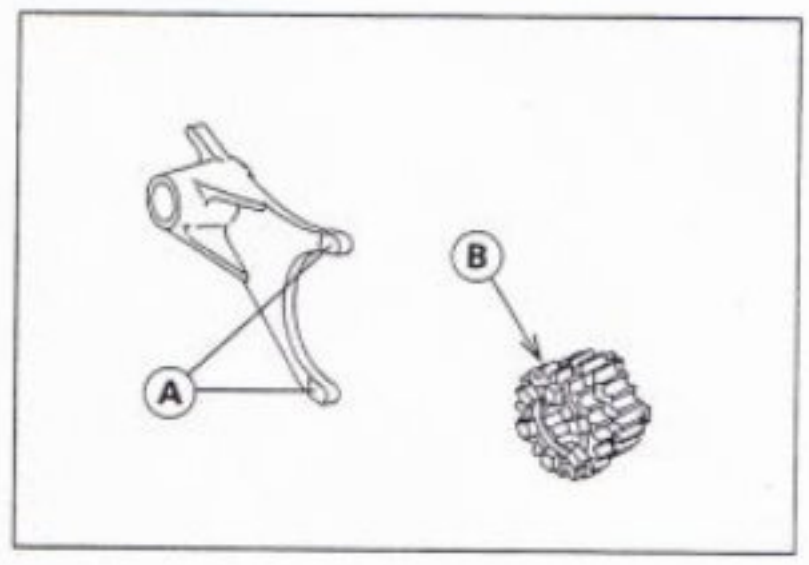

Shift Fork Guide Pin/Drum Groove Wear

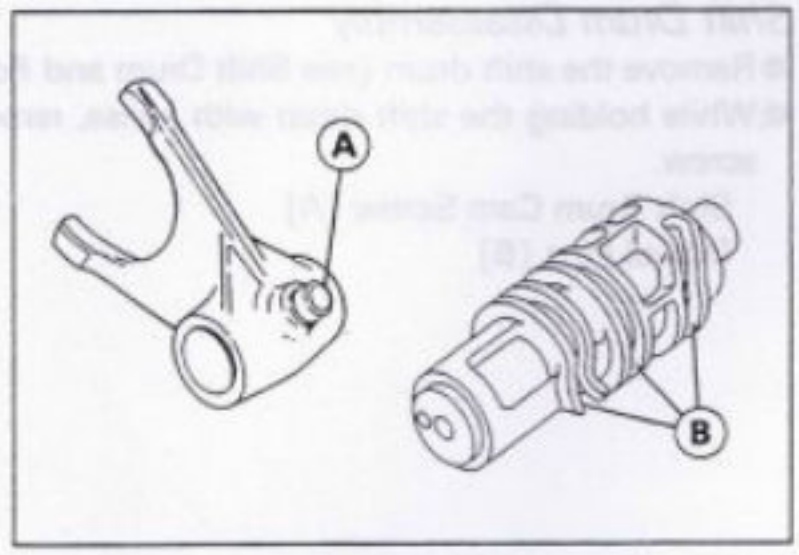

- Measure the diameter of each shift fork guide pin [A], and measure the width [B] of each shift drum groove.

★If the guide pin on any shift fork is less than the service limit, the fork must be replaced.

Shift Fork Guide Pin Diameter

Standard:	**7.9 ~ 8.0 mm**
Service Limit:	**7.8 mm**

★If any shift drum groove is worn over the service limit, the drum must be replaced.

Shift Drum Groove Width

Standard:	**8.05 ~ 8.20 mm**
Service Limit:	**8.30 mm**

Gear Dog and Gear Dog Hole Damage

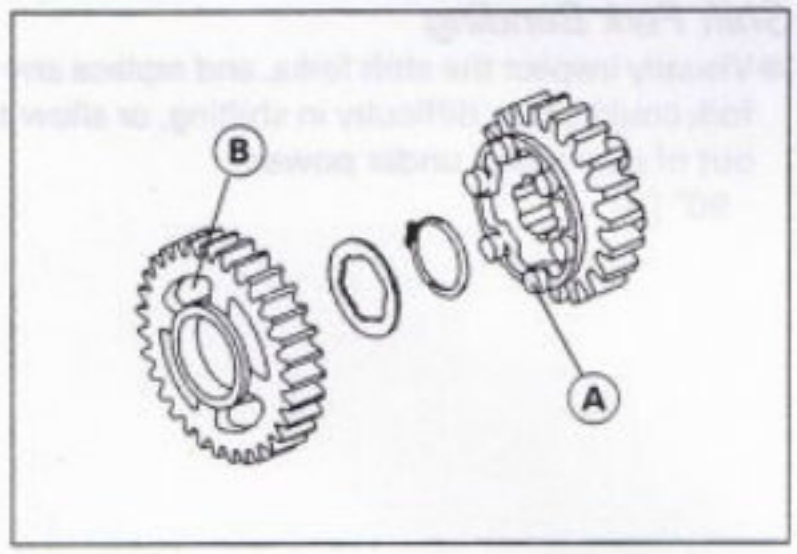

- Visually inspect the gear dogs [A] and gear dog holes [B].

★Replace any damaged gears or gears with excessively worn dogs or dog holes.

Ball Bearing, Needle Bearing, and Oil Seal

Ball and Needle Bearing Replacement

CAUTION
Do not remove the ball or needle bearings unless it is necessary. Removal may damage them.

- Using a press or puller, remove the ball bearing and/or needle bearing outer race.

NOTE

○ *In the absence of the above mentioned tools, satisfactory results may be obtained by heating the case to approximately 93°C (200°F) max., and tapping the bearing in or out.*

CAUTION
Do not heat the case with a torch. This will warp the case. Soak the case in oil and heat the oil.

- Using a press and the bearing driver set [A], install the new bearing or outer race until it stops at the bottom of its housing.

Special Tool – Bearing Driver Set: 57001-1129

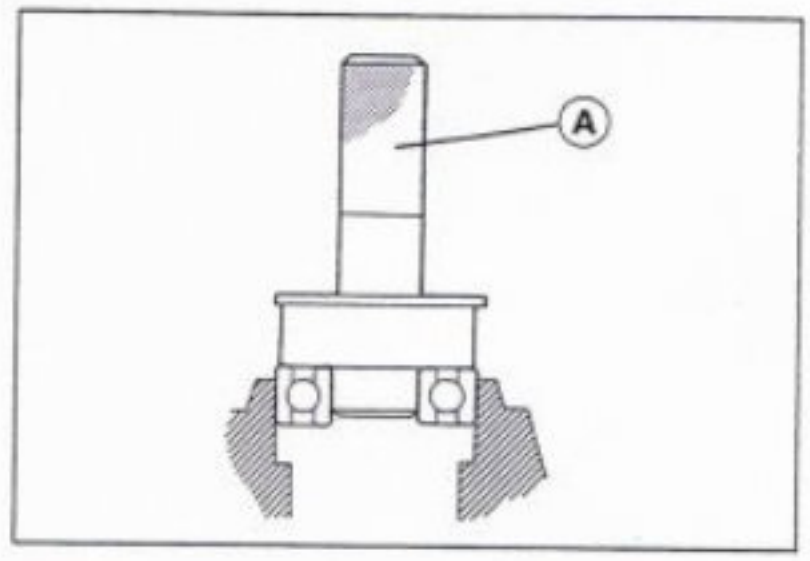

Ball and Needle Bearing Wear

CAUTION
Do not remove the bearings for inspection. Removal may damage them.

- Check the ball bearings.

○ Since the ball bearings are made to extremely close tolerances, the wear must be judged by feel rather than measurement. Clean each bearing in a high-flash point solvent, dry it (do not spin the bearing while it is dry), and oil it with engine oil.

○ Spin [A] the bearing by hand to check its condition.

★ If the bearing is noisy, does not spin smoothly, or has any rough spots, replace it.

- Check the needle bearings [A].

○ The rollers in a needle bearing normally wear very little, and wear is difficult to measure. Instead of measuring, inspect the bearing for abrasion, color change, or other damage.

★ If there is any doubt as to the condition of a needle bearing, replace it.

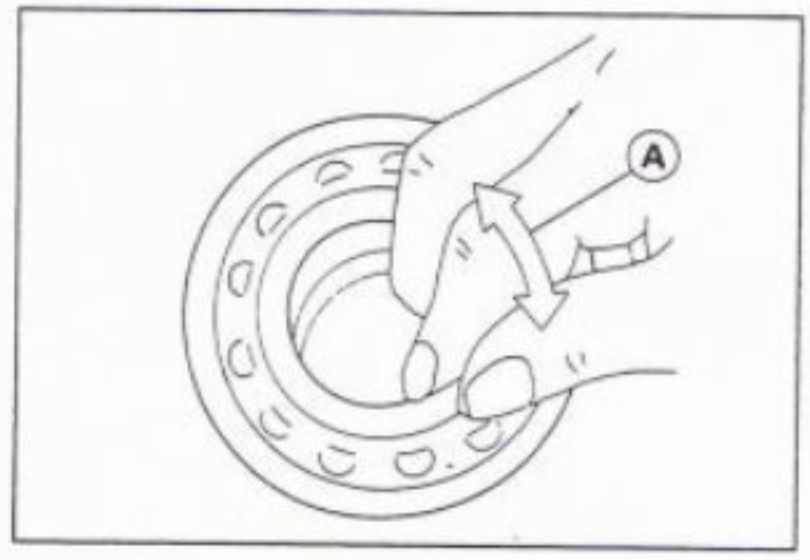

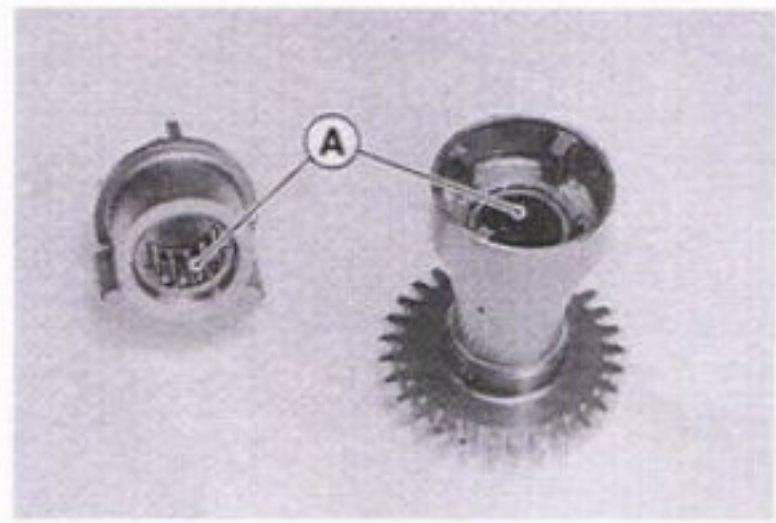

Oil Seal Inspection

- Inspect the oil seals.

★ Replace it if the lips are misshapen, discolored (indicating that the rubber has deteriorated), hardened or otherwise damaged.

Wheels / Tires

Table of Contents

Exploded View 9-2
Specifications 9-3
Wheels (Rims) 9-4
- Front Wheel Removal 9-4
- Front Wheel Installation 9-4
- Rear Wheel Removal 9-5
- Rear Wheel Installation 9-5
- Wheel Inspection 9-6
- Axle Inspection 9-6
- Balance Inspection 9-6
- Balance Adjustment 9-6
- Balance Weight Removal 9-7
- Balance Weight Installation 9-7

Tires 9-9
- Air Pressure Inspection/Adjustment 9-9
- Tire Inspection 9-9
- Tire Removal 9-9
- Tire Installation 9-10
- Tire Repair 9-11

Hub Bearings (Wheel Bearings) 9-12
- Hub Bearing Removal 9-12
- Hub Bearing Installation 9-12
- Hub Bearing Inspection 9-13

Speedometer Gear Housing 9-14
- Disassembly 9-14
- Lubrication 9-14

Exploded View

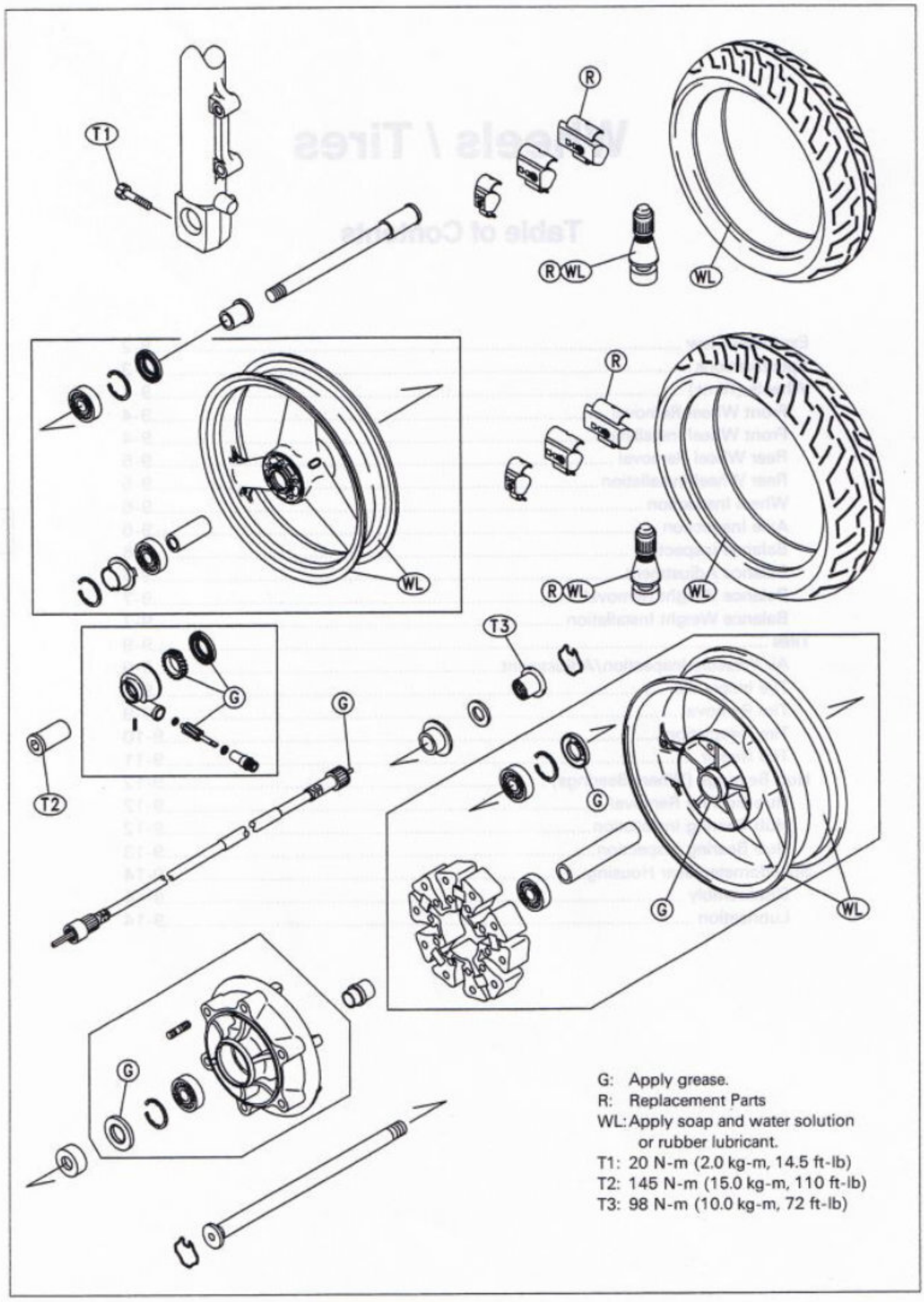

Specifications

Item		Standard	Service Limit
Wheels (Rims):			
Rim runout:	Axial	---	TIR 0.5 mm
	Radial	---	TIR 0.8 mm
Axle runout/100 mm		TIR 0.1 mm or less	TIR 0.2 mm
Wheel balance		10g or less	- - -
Balance weights		10g, 20g, 30g	- - -
Tires:			
Air pressure (when cold):			
	Front	225 kPa(2.25 kg/cm², 32 psi)	- - -
	Rear	250 kPa (2.5 kg/cm², 36 psi)	- - -
Tread depth:			
	Front	4.3 mm	1 mm
	Rear	6.2 mm	up to 130 km/h (80 mph): 2 mm over 130 km/h (80 mph): 3 mm
		Make, Type	Size
Standard tires:	Front	BRIDGESTONE BATTLAX BT-57F F, tubeless	120/70 ZR17(58W)
		DUNLOP D204FP, tubeless	
	Rear	BRIDGESTONE BATTLAX BT-57R F, tubeless	170/60 ZR17(72W)
		DUNLOP D204 G, tubeless	

Special Tools – Jack: 57001-1238
Inside Circlip Pliers: 57001-143
Bearing Driver Set: 57001-1129
Bearing Remover Shaft, Φ9: 57001-1265
Bearing Remover Head, Φ20 x Φ22: 57001-1293
Bearing Remover Head, Φ25 x Φ28: 57001-1346

Wheels (Rims)

Front Wheel Removal

- Remove the speedometer cable lower end [A].
- Remove both brake calipers [B] with the hoses installed.

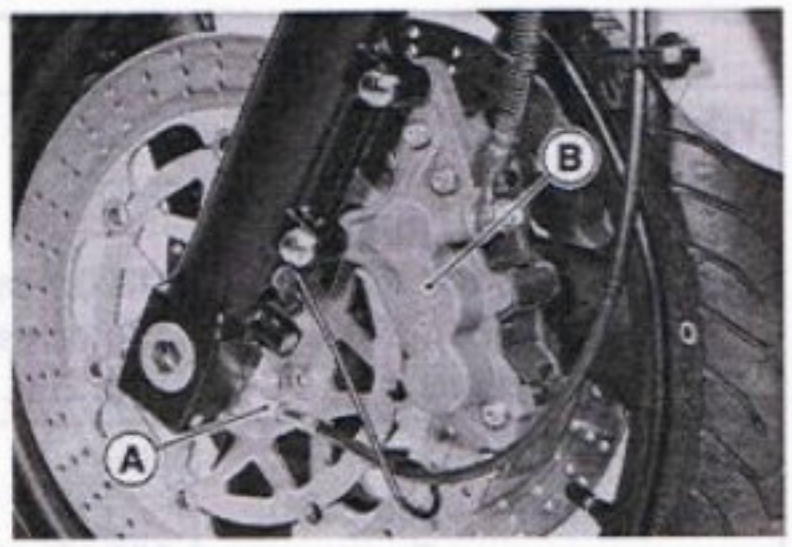

- Loosen:
  Right Side Axle Clamp Bolts [A]
  Front Axle [B]

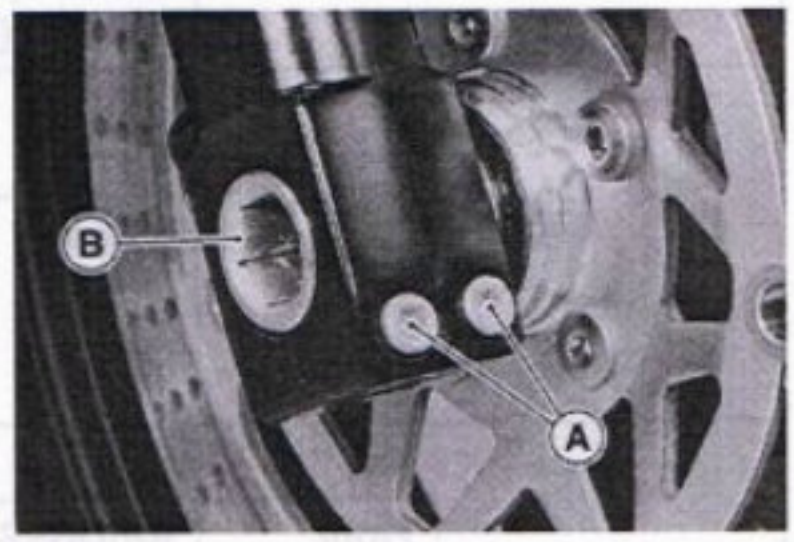

- Raise the front wheel off the ground, using the jack.

  Special Tool – Jack: 57001-1238

- Pull out the axle to the right and drop the front wheel out of the forks.

CAUTION
Do not lay the wheel down on one of the discs. This can damage or warp the disc. Place blocks under the wheel so that the disc does not touch the ground.

Front Wheel Installation

- Install the speedometer gear housing so that the projections [A] fit in the drive notches [B].

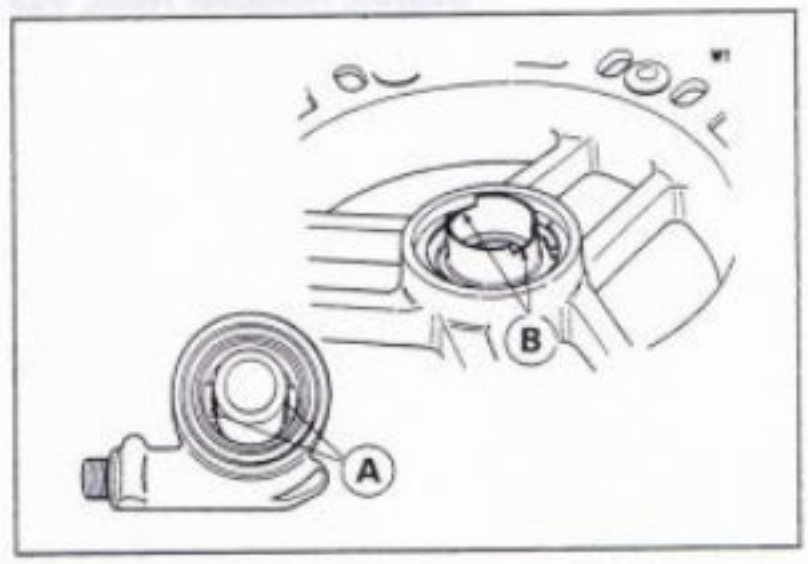

- Fit the collar on the right side of the hub.
- Fit the speedometer gear housing stop [A] between the fork leg stops [B].
- Tighten the axle and right axle clamp bolts.

  Torque – Front Axle: 145 N-m(15.0 kg-m, 110 ft-lb)
  Front Axle Clamp Bolts: 20 N-m(2.0 kg-m, 14.5 ft-lb)

- Install the front brake caliper (see Brakes chapter).
- Check the front brake effectiveness.

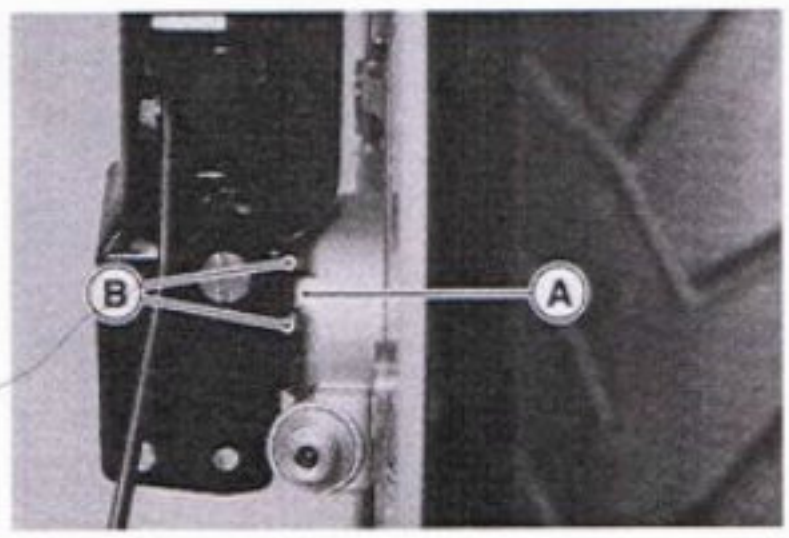

⚠WARNING

Do not attempt to drive the motorcycle until a full brake lever is obtained by pumping the brake lever until the pads are against the disc. The brakes will not function on the first application of the lever if this is not done.

Rear Wheel Removal

- Raise the rear wheel off the ground, using the jack.

Special Tool – Jack: 57001-1238

- Loosen the torque link nuts.
- Remove:
  Retaining Rings [A]
  Axle Nut [B]
  Rear Axle [C]

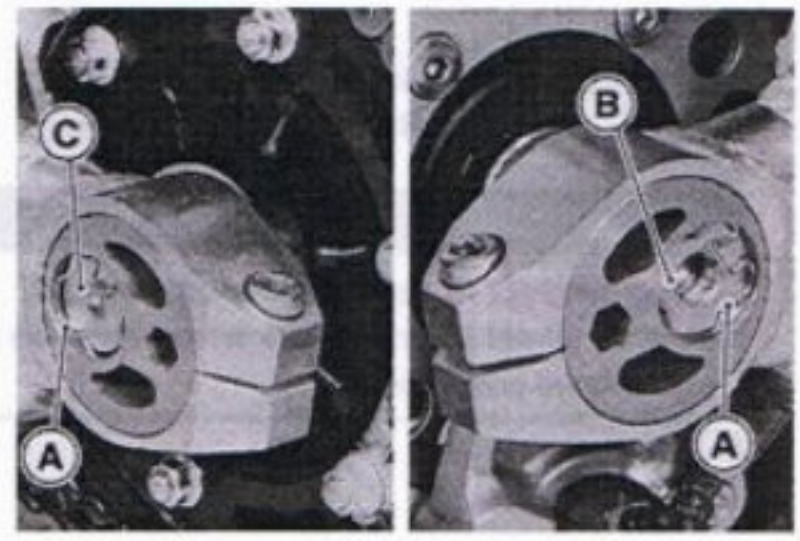

- Disengage the drive chain from the rear sprocket toward the left and remove the rear wheel.

CAUTION

Do not lay the wheel on the ground with the disc facing down. This can damage or warp the disc. Place blocks under the wheel so that the disc does not touch the ground.

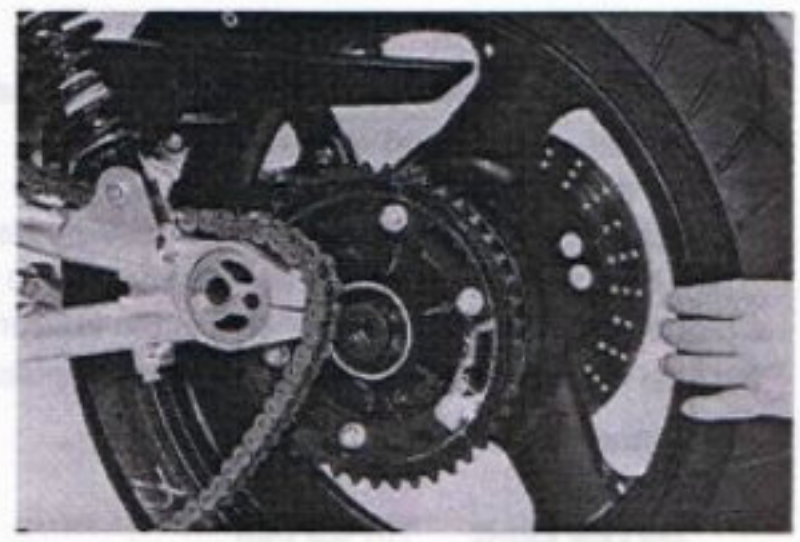

Rear Wheel Installation

- Engage the drive chain with the rear sprocket, and install the rear wheel.
- Insert the axle from the left side of the wheel, and tighten the axle nut.

Torque – Rear Axle Nut: 98 N-m (10.0 kg-m, 72 ft-lb)

- Adjust the drive chain slack after installation (see Final Drive chapter).
- Check the rear brake effectiveness.

⚠WARNING

Do not attempt to drive the motorcycle until a full brake pedal is obtained by pumping the brake pedal until the pads are against the disc. The brake will not function on the first application of the pedal if this is not done.

Wheel Inspection

- Raise the front/rear wheel off the ground.

Special Tool – Jack: 57001-1238

- Spin the wheel lightly, and check for roughness or binding.
- ★If roughness or binding is found, replace the hub bearings.
- Inspect the wheel for small cracks, dents, bending, or warp.
- ★If there is any damage to the wheel, replace the wheel.
- Remove the wheel, and support it without the tire by the axle.
- Measure the radial [A] and axial [B] rim runout with a dial gauge.
- ★If rim runout exceeds the service limit, check the hub bearings.
- ★If the problem is not due to the bearings, replace the wheel.

Rim Runout

Service Limit:	**Axial:**	**TIR 0.5 mm**
	Radial:	**TIR 0.8mm**

⚠WARNING

Never attempt to repair a damaged wheel. If there is any damage besides wheel bearings, the wheel must be replaced to insure safe operational condition.

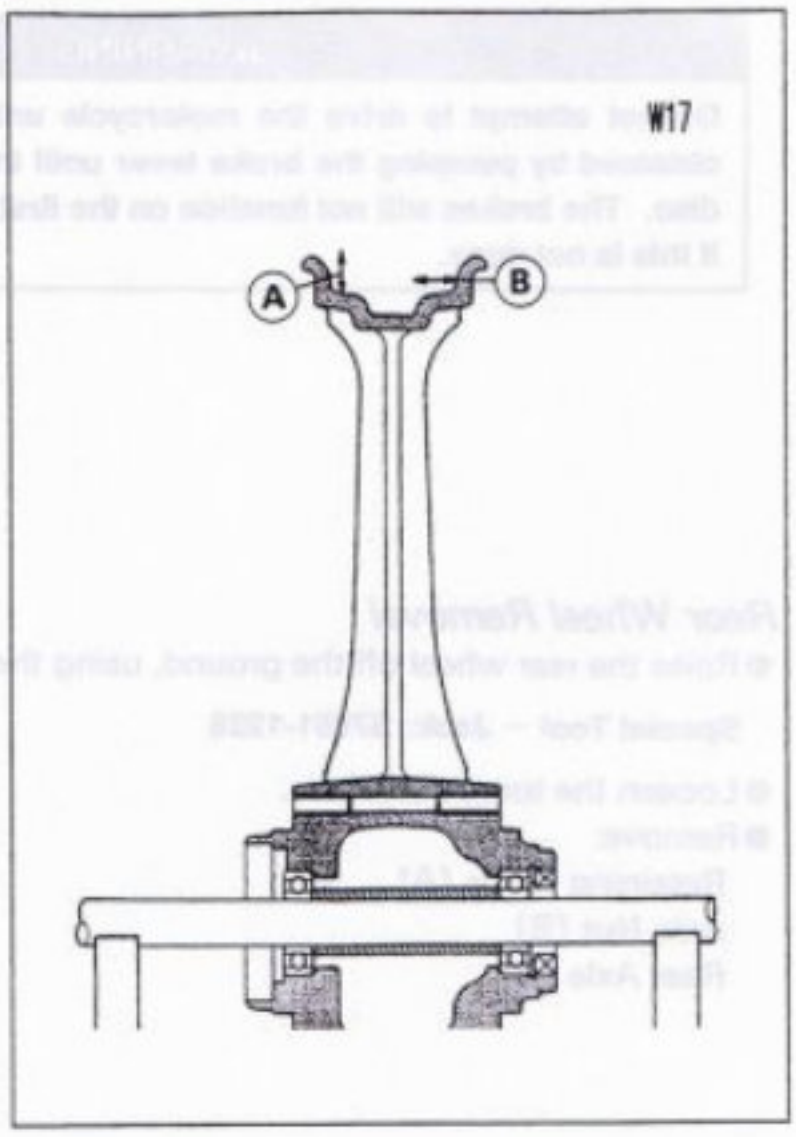

Axle Inspection

- Visually inspect the front or rear axle for damages.
- ★If the axle is damaged or bent, replace it.
- Place the axle in V blocks that are 100 mm [A] apart, and set a dial gauge [B] on the axle at a point halfway between the blocks. Turn [C] the axle to measure the runout. The difference between the highest and lowest dial readings is the amount of runout.
- ★If axle runout exceeds the service limit, replace the axle.

Axle Runout/100 mm

Standard:	**TIR 0.1 mm or less**
Service Limit:	**TIR 0.2 mm**

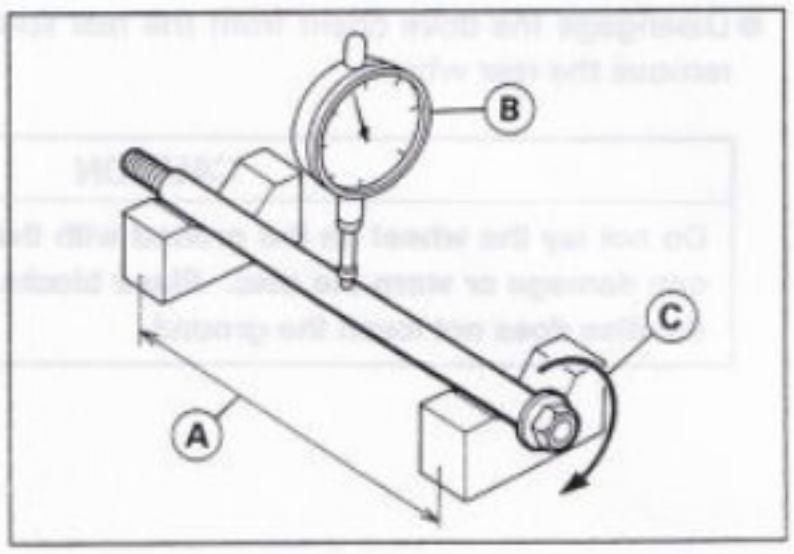

Balance Inspection

- Remove the wheel.
- Support the wheel so that it can be spun freely.
- Spin the wheel lightly, and mark [A] the wheel at the top when the wheel stops.
- ○Repeat this procedure several times. If the wheel stops of its own accord in various positions, it is well balanced.
- ★If the wheel always stops in one position, adjust the wheel balance.

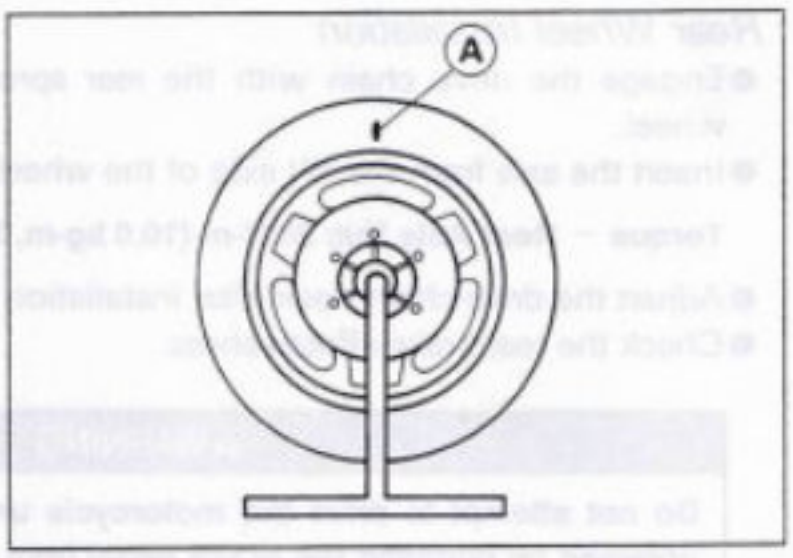

Balance Adjustment

- If the wheel always stops in one position, provisionally attach a balance weight [A] on the rim at the marking using adhesive tape.
- Rotate the wheel ¼ turn [B], and see whether or not the wheel stops in this position. If it does, the correct balance weight is being used.
- ★If the wheel rotates and the weight goes up, replace the weight with the next heavier size. If the wheel rotates and the weight goes down, replace the weight with the next lighter size. Repeat these steps until the wheel remains at rest after being rotated ¼ turn.
- Rotate the wheel another ¼ turn and then another ¼ turn to see if the wheel is correctly balanced.

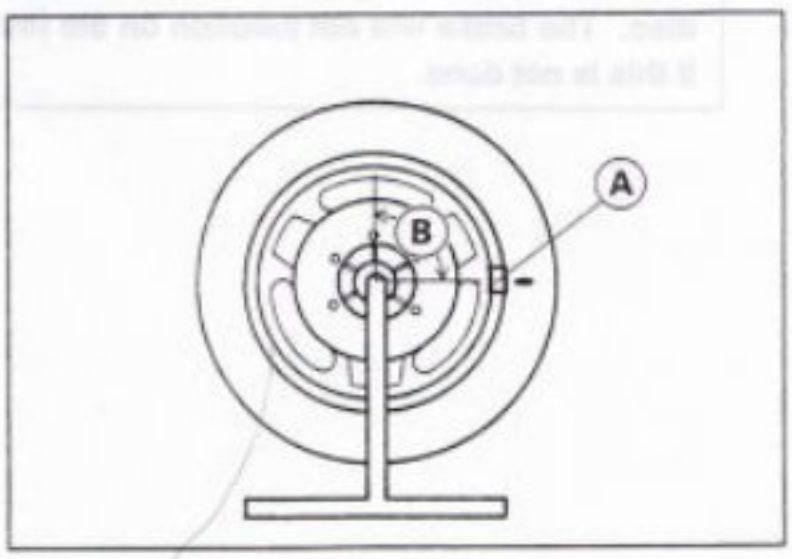

- Repeat the entire procedure as many times as necessary to achieve correct wheel balance.
- Permanently install the balance weight.

Balance Weight

Part Number	Weight(grams)
41075-1014	10
41075-1015	20
41075-1016	30

Balance Weight Removal

(a) When the tire is not on the rim.

- Push [A] the blade portion toward the outside with a regular tip screwdriver, and slip the weight off the rim flange.
- Discard the used balance weight.

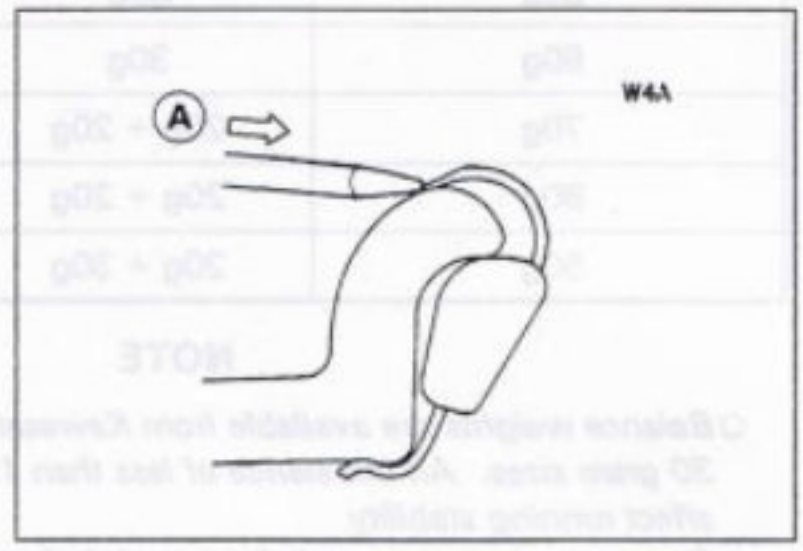

(b) When the tire is on the rim.

- Pry [A] the balance weight off the rim flange using a regular tip screwdriver, as shown in the figure.
  - ○ Insert a tip of the screwdriver between the tire bead [B] and weight blade [C] until the end of the tip reaches the end of the weight blade.
  - ○ Push the driver grip toward the tire so that the balance weight slips off the rim flange.
- Discard the used balance weight.

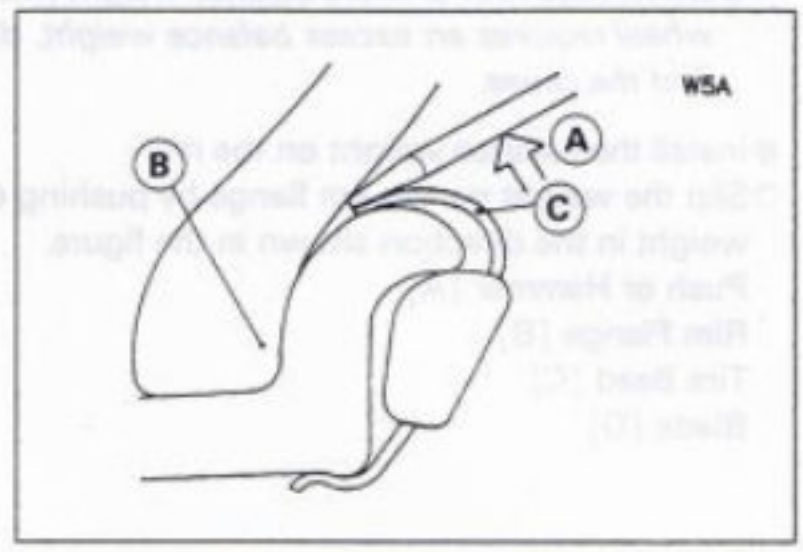

Balance Weight Installation

- Check if the weight portion has any play on the clip plate.

★ If it does, discard it.

⚠WARNING

If the balance weight has any play on the rim, the clip of the weight has been stretched. Replace the loose balance weight.
Do not reuse used balance weight.
Unbalanced wheels can create an unsafe riding condition.

- Lubricate the balance weight blade, tire bead, and rim flange with a soap and water solution or rubber lubricant. This helps the balance weight slip onto the rim flange.

CAUTION

Do not lubricate the tire bead with engine oil or gasoline because they will deteriorate the tire.

●When installing the balance weight 20g or more, install the balance weights at both sides of rim flange as shown.

Required Total Weight	Weight Selection	
	One Side [A]	Other Side [B]
10g	10g	–
20g	10g	10g
30g	20g	10g
40g	20g	20g
50g	30g	20g
60g	30g	30g
70g	20g + 20g	30g
80g	20g + 20g	20g + 20g
90g	20g + 30g	20g + 20g

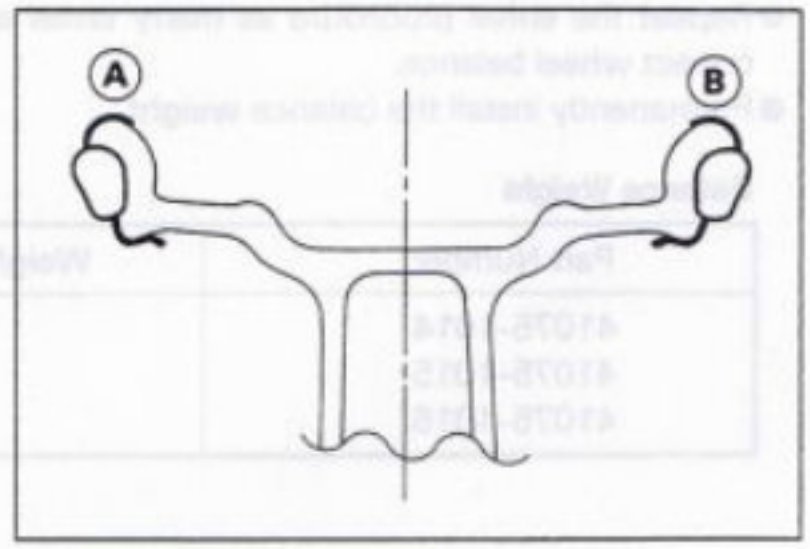

NOTE

○*Balance weights are available from Kawasaki dealers in 10, 20, and 30 gram sizes. An imbalance of less than 10 grams will not usually affect running stability.*

○*Do not use four or more balance weight (more than 90 gram). If the wheel requires an excess balance weight, disassemble the wheel to find the cause.*

●Install the balance weight on the rim.

○Slip the weight on the rim flange by pushing or lightly hammering the weight in the direction shown in the figure.
Push or Hammer [A]
Rim Flange [B]
Tire Bead [C]
Blade [D]

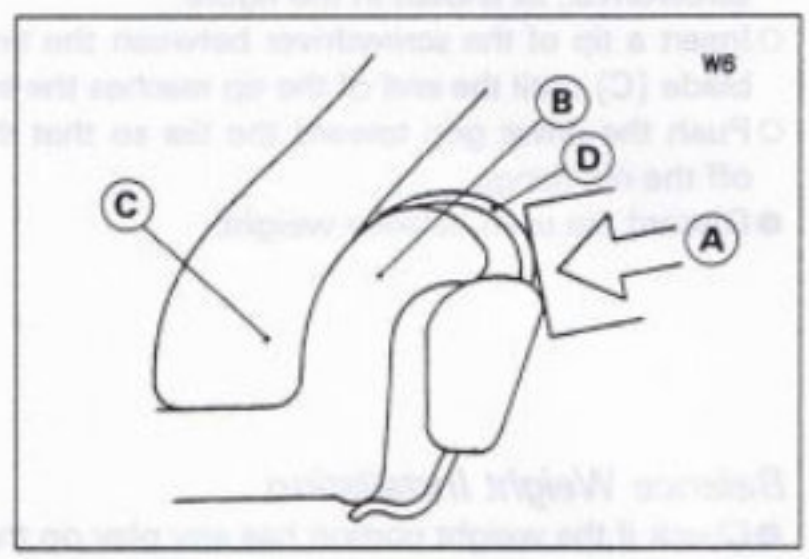

○Check that the blade [A] and weight [B] seat fully on the rim flange [C], and that the clip [D] is hooked over the rim ridge [E] and reaches rim flat portion.

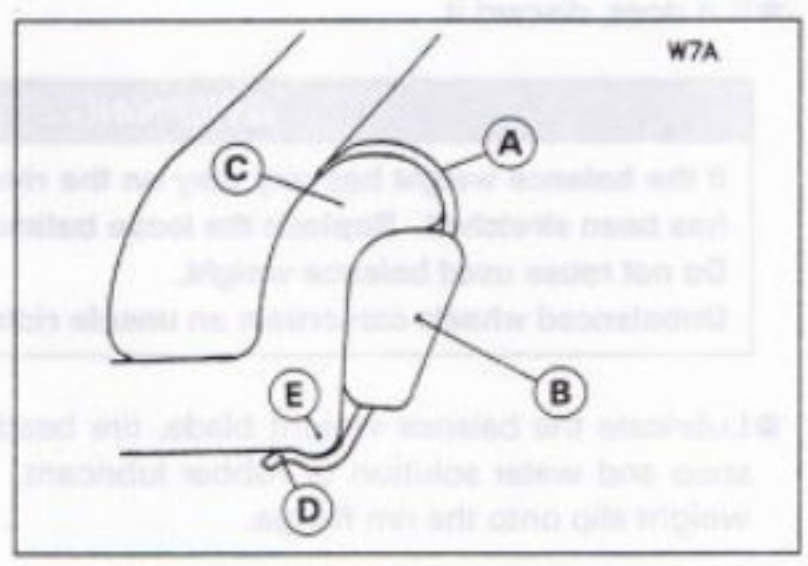

Tires

Air Pressure Inspection/Adjustment

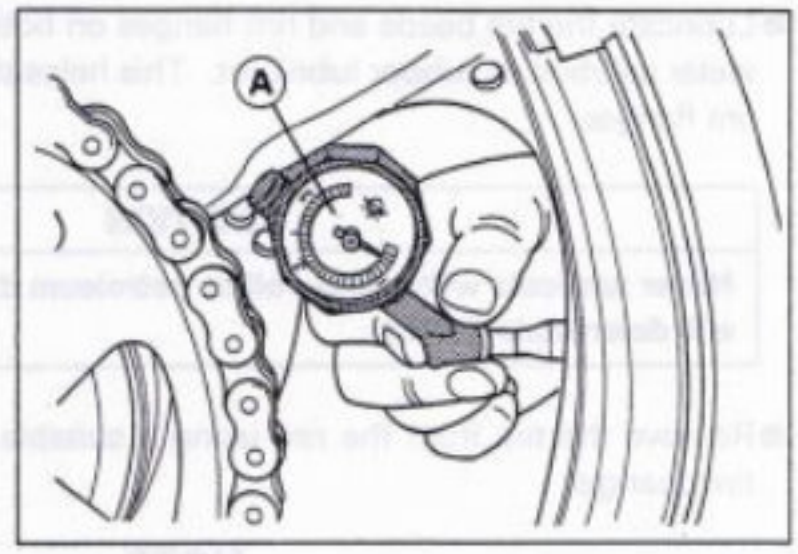

- Measure the tire air pressure with an air pressure gauge [A] when the tires are cold (that is, when the motorcycle has not been ridden more than a mile during the past 3 hours).

★Adjust the tire air pressure according to the specifications if necessary.

Air Pressure (when cold)
Front: 225 kPa (2.25 kg/cm², 32 psi)
Rear: 250 kPa (2.5 kg/cm², 36 psi)

Tire Inspection

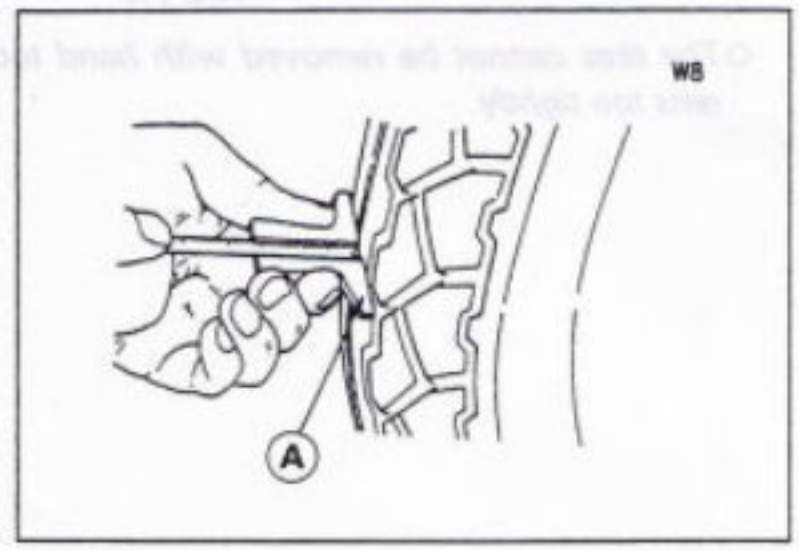

As the tire tread wears down, the tire becomes more susceptible to puncture and failure. An accepted estimate is that 90% of all tire failures occur during the last 10% of tread life (90% worn). So it is false economy and unsafe to use the tires until they are bald.

- Remove any imbedded stones or other foreign particles from the tread.
- Visually inspect the tire for cracks and cuts, replacing the tire in case of damage. Swelling or high spots indicate internal damage, requiring tire replacement.
- Measure the tread depth at the center of the tread with a depth gauge [A]. Since the tire may wear unevenly, take measurement at several places.

★If any measurement is less than the service limit, replace the tire.

Tread Depth

Front:		
	Standard:	**4.3 mm**
	Service Limit:	**1 mm**
Rear:		
	Standard:	**6.2 mm**
	Service Limit:	**2 mm(Up to 130 km/h)**
		3 mm(Over 130 km/h)

⚠WARNING

To ensure safe handling and stability, use only the recommended standard tires for replacement, inflated to the standard pressure.

NOTE

○ *Most countries may have their own regulations requiring a minimum tire tread depth; be sure to follow them.*
○ *Check and balance the wheel when a tire is replaced with a new one.*

Tire Removal

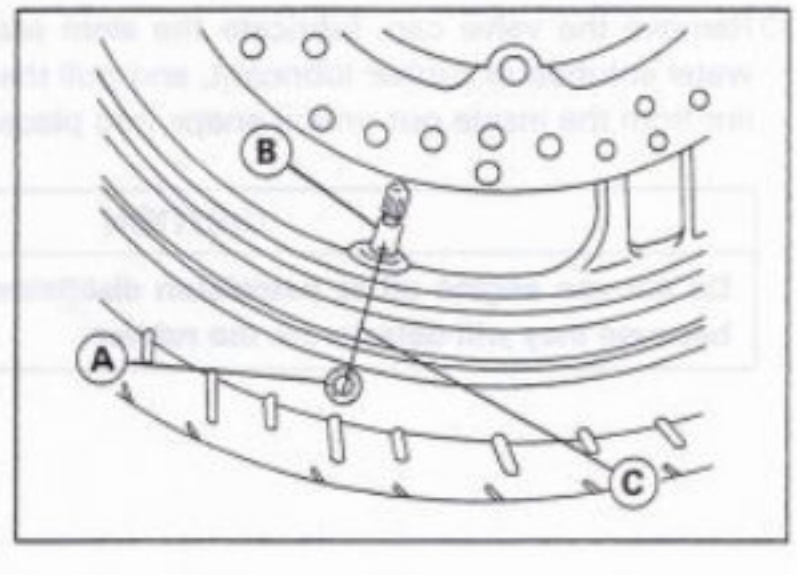

- Remove:
  Wheel (see this chapter)
  Disc(s)
  Valve Core (let out the air)
- To maintain wheel balance, mark the valve stem position on the tire with chalk so that the tire can be reinstalled in the same position.
  Chalk Mark or Yellow Mark [A]
  Air Valve [B]
  Align [C]

- Lubricate the tire beads and rim flanges on both sides with a soap and water solution or rubber lubricant. This helps the tire beads slip off the rim flanges.

CAUTION
Never lubricate with engine oil or petroleum distillates because they will deteriorate the tire.

- Remove the tire from the rim using a suitable commercially available tire changer.

NOTE

○ *The tires cannot be removed with hand tools because they fit the rims too tightly.*

Tire Installation

- Inspect the rim and tire, and replace them if necessary.
- Clean the sealing surfaces of the rim and tire, and smooth the sealing surfaces of the rim with a fine emery cloth if necessary.
- Remove the air valve and discard it.

CAUTION
Replace the air valve whenever the tire is replaced. **Do not reuse the air valve.**

- Install a new valve in the rim.
  Valve Cap [A]
  Valve Core [B]
  Stem Seal [C]
  Valve Stem [D]
  Valve Seat [E]
  Valve Opened [F]

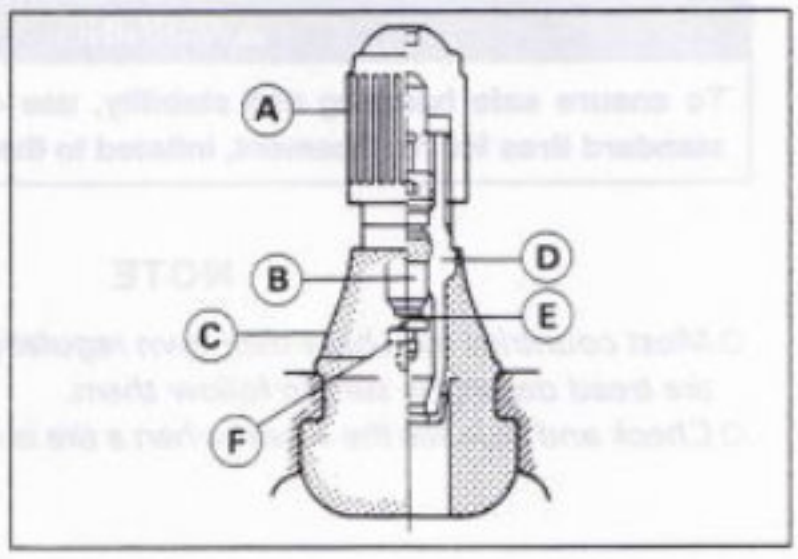

○ Remove the valve cap, lubricate the stem seal [A] with a soap and water solution or rubber lubricant, and pull the valve stem through the rim from the inside out until it snaps into place.

CAUTION
Do not use engine oil or petroleum distillates to lubricate the stem because they will deteriorate the rubber.

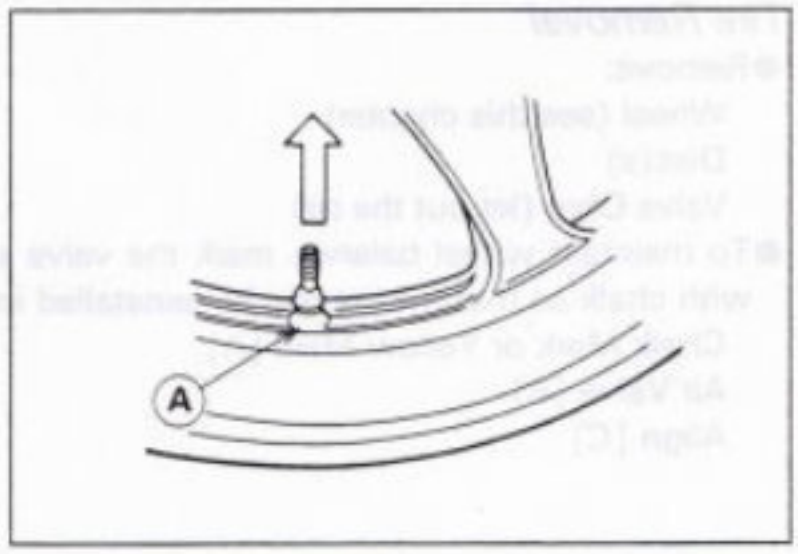

- Apply a soap and water solution, or rubber lubricant to the rim flange and tire beads.
- Check the tire rotation mark on the front and rear tires and install them on the rim accordingly.
  Rotation Direction [A]
  Tire Rotation Mark [B]

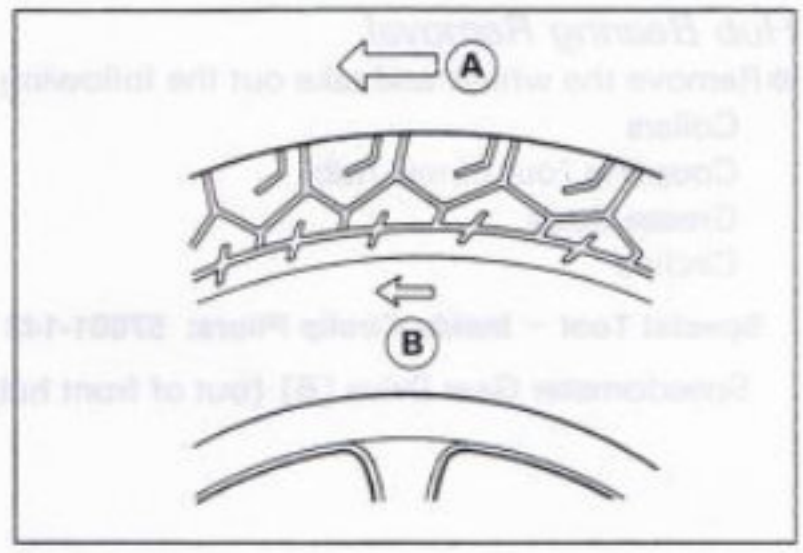

- Position the tire on the rim so that the valve [A] is at the tire balance mark [B] (the chalk mark made during removal, or the yellow paint mark on a new tire).
- Install the tire bead over the rim flange using a suitable commercially available tire changer.
- Lubricate the tire beads and rim flanges with a soap and water solution or rubber lubricant to help seat the tire beads in the sealing surfaces of the rim while inflating the tire.
- Center the rim in the tire beads, and inflate the tire with compressed air until the tire beads seat in the sealing surfaces.

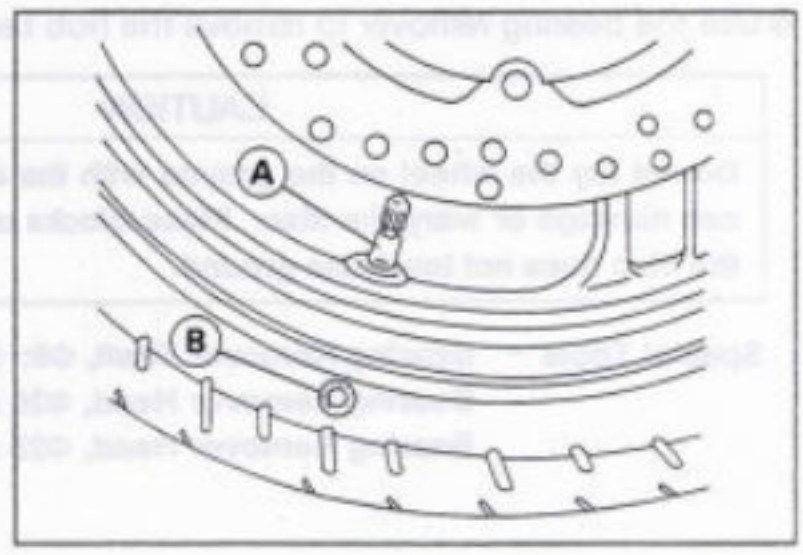

⚠WARNING

Be sure to install the valve core whenever inflating the tire, and do not inflate the tire to more than 400 kPa(4.0 kg/cm^2, 57 psi). Overinflation can explode the tire with possibility of injury and loss of life.

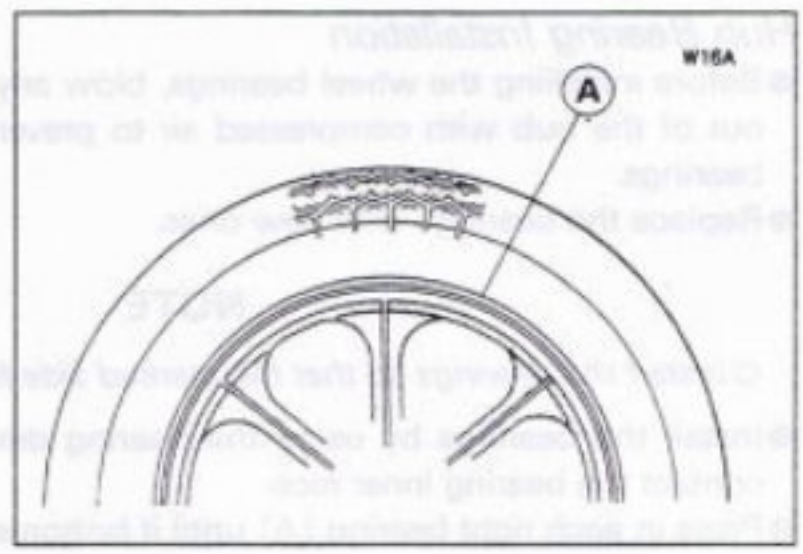

- Check to see that the rim lines [A] on both sides of the tire sidewalls are parallel with the rim flanges.

★If the rim flanges and tire sidewall rim lines are not parallel, remove the valve core.

- Lubricate the rim flanges and tire beads.
- Install the valve core and inflate the tire again.
- After the tire beads seat in the rim flanges, check for air leaks.

○Inflate the tire slightly above standard inflation.

○Use a soap and water solution or submerge the tire, and check for bubbles that would indicate leakage.

- Adjust the air pressure to the specified pressure (see Tire Inspection).
- Install the brake disc(s) so that the marked side faces out (see Brakes chapter).
- Adjust the wheel balance.

Tire Repair

Currently two types of repair for tubeless tires have come into wide use. One type is called a temporary (external) repair which can be carried out without removing the tire from the rim, and the other type is called permanent (internal) repair which requires tire removal. It is generally understood that higher running durability is obtained by permanent (internal) repairs than by temporary (external) ones. Also, permanent (internal) repairs have the advantage of permitting a thorough examination for secondary damage not visible from external inspection of the tire. For these reasons, Kawasaki does not recommend temporary (external) repair. Only appropriate permanent (internal) repairs are recommended. Repair methods may vary slightly from make to make. Follow the repair methods indicated by the manufacturer of the repair tools and materials so that safe results can be obtained.

Hub Bearings (Wheel Bearings)

Hub Bearing Removal

- Remove the wheel, and take out the following.
  - Collars
  - Coupling (out of rear hub)
  - Grease Seals
  - Circlips

Special Tool – Inside Circlip Pliers: 57001-143 [A]

Speedometer Gear Drive [B] (out of front hub)

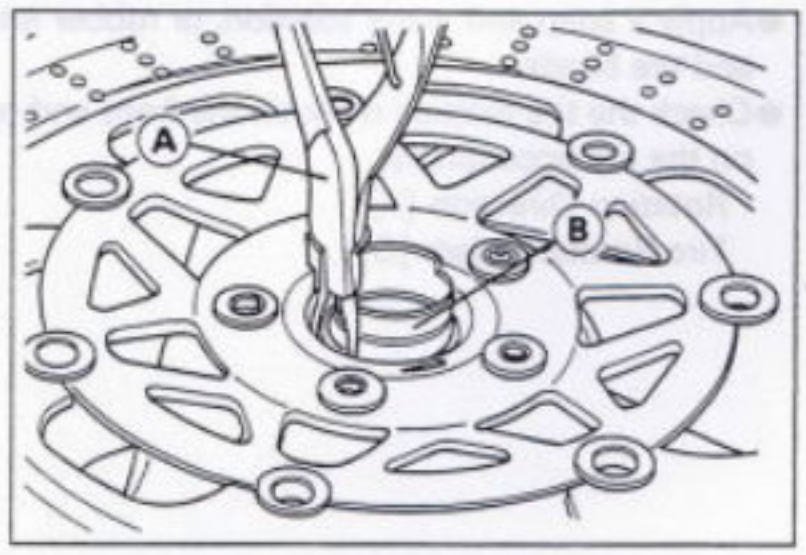

- Use the bearing remover to remove the hub bearings [A].

CAUTION
Do not lay the wheel on the ground with the disc facing down. This can damage or warp the disc. Place blocks under the wheel so that the disc does not touch the ground.

Special Tools – Bearing Remover Shaft, Φ9: 57001-1265 [B]
Bearing Remover Head, Φ20 x Φ22: 57001-1293 [C]
Bearing Remover Head, Φ25 x Φ28: 57001-1346 [C]

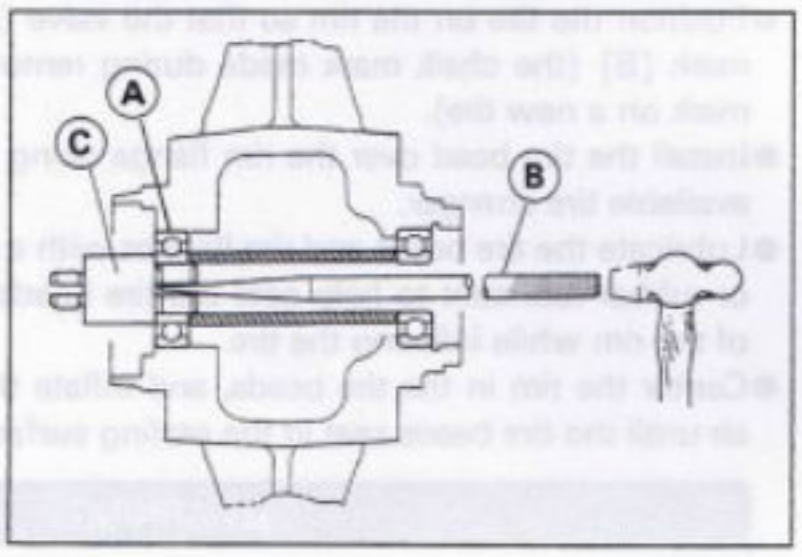

Hub Bearing Installation

- Before installing the wheel bearings, blow any dirt or foreign particles out of the hub with compressed air to prevent contamination of the bearings.
- Replace the bearings with new ones.

NOTE

○ *Install the bearings so that the marked side faces out.*

- Install the bearings by using the bearing driver set which does not contact the bearing inner race.
- Press in each right bearing [A] until it bottoms out.

Special Tool – Bearing Driver Set: 57001-1129 [B]

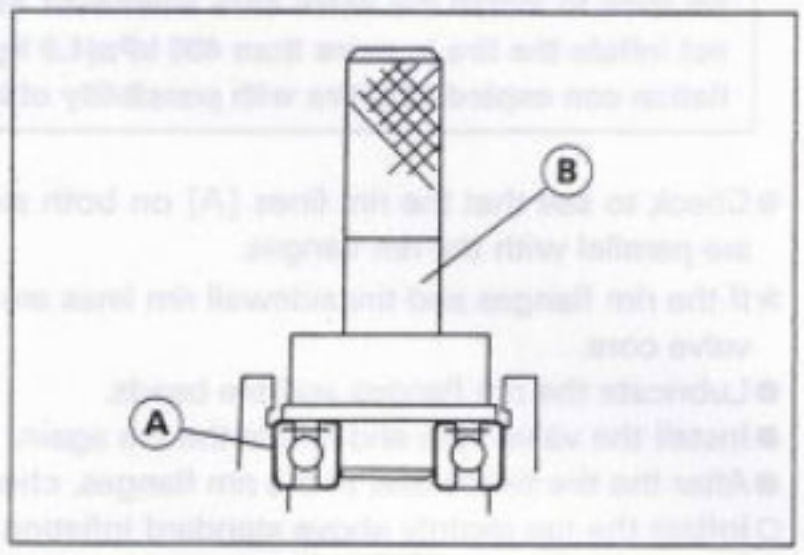

- Replace the circlips with new ones.

Special Tool – Inside Circlip Pliers: 57001-143

- Replace the grease seals with new ones.
- Press in the grease seals [A] so that seal surface is flush [B] with the end of the hole.
- ○ Apply high temperature grease to the grease seal lips.

Special Tool – Bearing Driver Set: 57001-1129 [C]

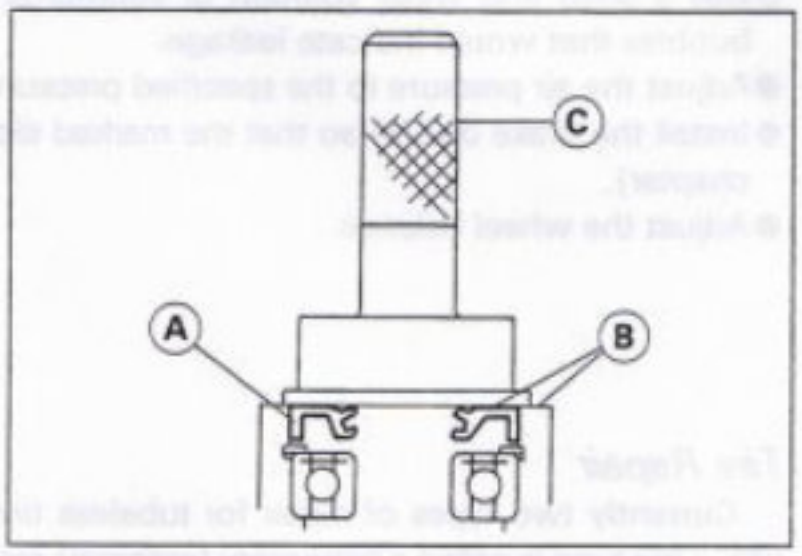

- Put the speedometer gear drive [A] onto the front wheel hub notches [B], then install the circlip [C].

Special Tool – Inside Circlip Pliers: 57001-143

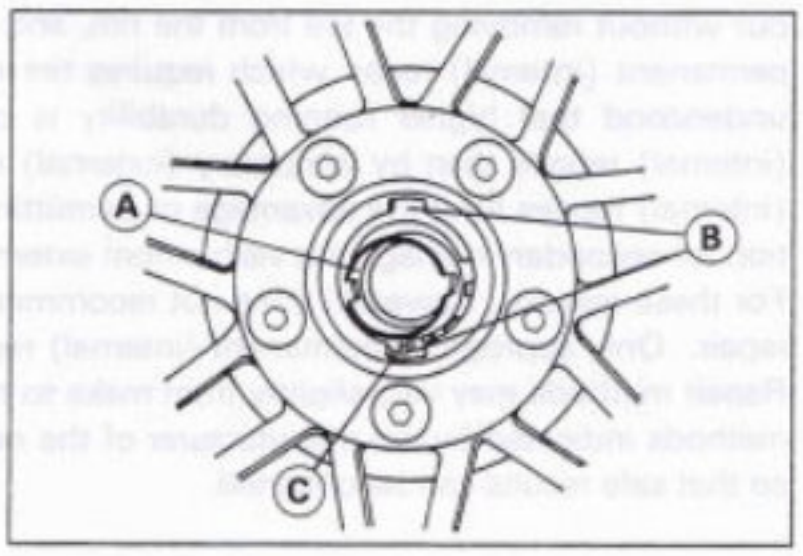

Hub Bearing Inspection

○Since the hub bearings are made to extremely close tolerances, the clearance cannot normally be measured.

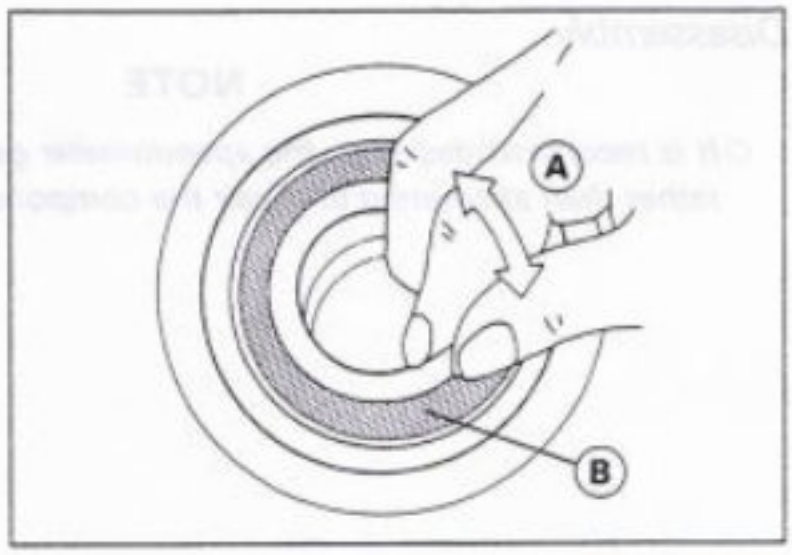

NOTE

○*Do not remove any bearings for inspection. If any bearings are removed, they will need to be replaced with new ones.*

●Turn each bearing in the hub back and forth [A] while checking for plays, roughness, or binding. If bearing play, roughness, or binding is found, replace the bearing.

●Examine the bearing seal [B] for tears or leakage.

★If the seal is torn or is leaking, replace the bearing.

Speedometer Gear Housing

Disassembly

NOTE

○ *It is recommended that the speedometer gear housing be replaced rather than attempting to repair the components.*

Lubrication

● Clean and grease [A] the speedometer gear housing [B].

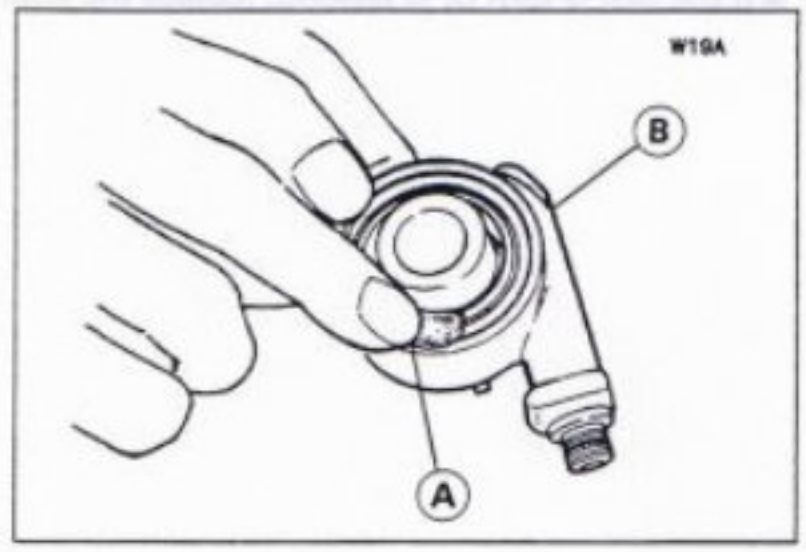

Final Drive

Table of Contents

Exploded View 10-2
Specifications 10-3
Drive Chain 10-4
Drive Chain Slack Inspection 10-4
Drive Chain Slack Adjustment 10-4
Wheel Alignment Inspection 10-4
Wheel Alignment Adjustment 10-5
Wear Inspection 10-5
Lubrication 10-6
Drive Chain Removal 10-6
Drive Chain Installation 10-7
Sprocket, Coupling 10-8
Engine Sprocket Removal 10-8
Engine Sprocket Installation 10-8
Rear Sprocket Removal 10-8
Rear Sprocket, Coupling Installation 10-9
Coupling Bearing Removal 10-9
Coupling Bearing Installation 10-9
Damper Inspection 10-9
Sprocket Wear 10-10
Rear Sprocket Warp Inspection 10-10

Exploded View

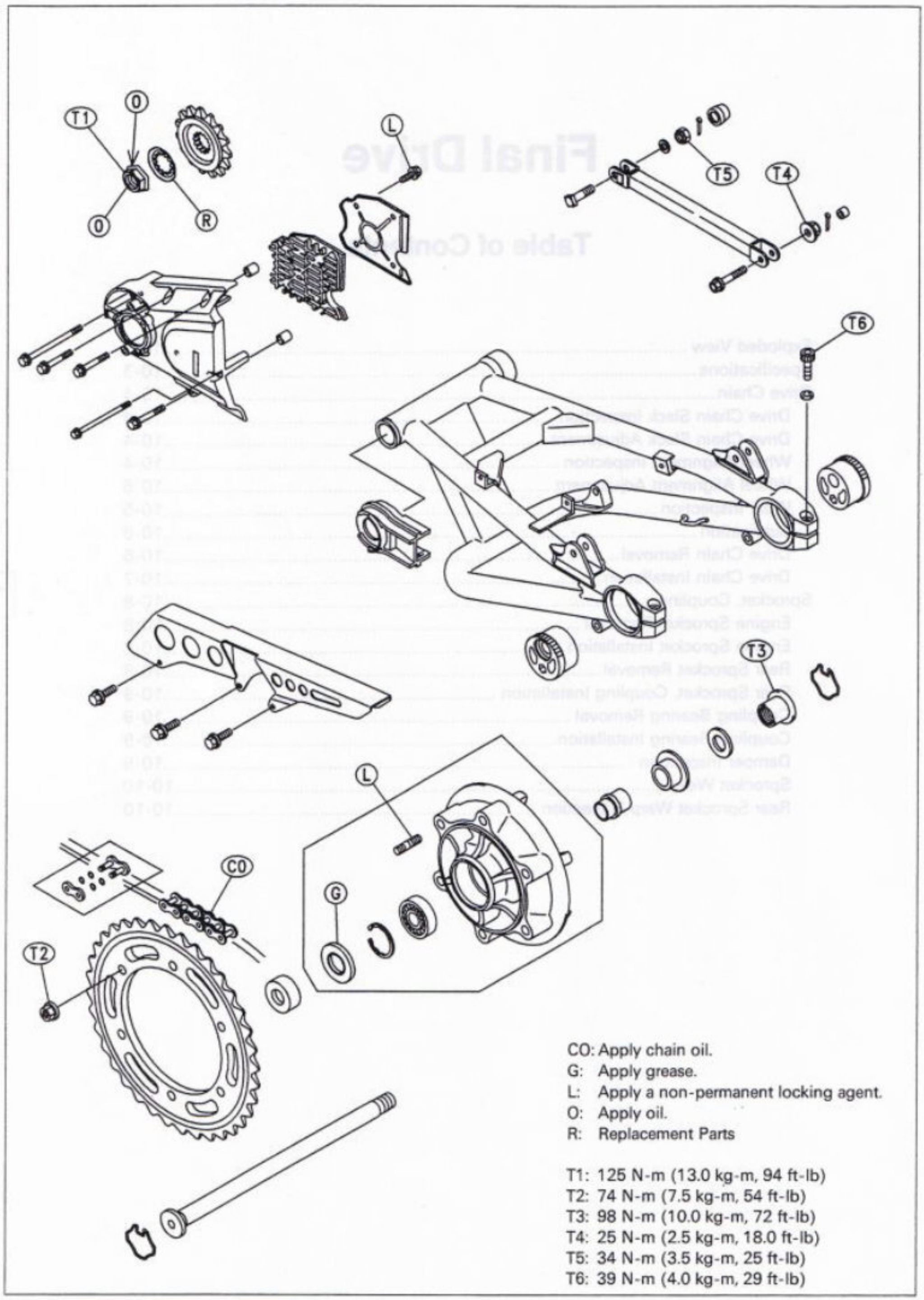

Specifications

Item	Standard	Service Limit
Drive Chain:		
Standard chain		
Make	DAIDO	---
Type	DID 50ZV2 Joint Endless	---
Link	110 links	---
Chain slack	25 ~ 35 mm	Too tight: less than 25 mm Too loose: more than 40 mm
Chain 20-link length	317.5 ~ 318.2 mm	323 mm
Link pin outside diameter	5.50 ~ 5.80 mm	---
Link plates outside width	22.3 ~ 22.5 mm	---
Sprockets:		
Rear sprocket warp	TIR 0.4 mm or less	TIR 0.5 mm

Special Tools – Inside Circlip Pliers: 57001-143
Bearing Driver Set: 57001-1129
Jack: 57001-1238

Drive Chain

Drive Chain Slack Inspection

NOTE

○ *Check the slack with the motorcycle setting on its side stand.*
○ *Clean the chain if it is dirty, and lubricate it if it appears dry.*

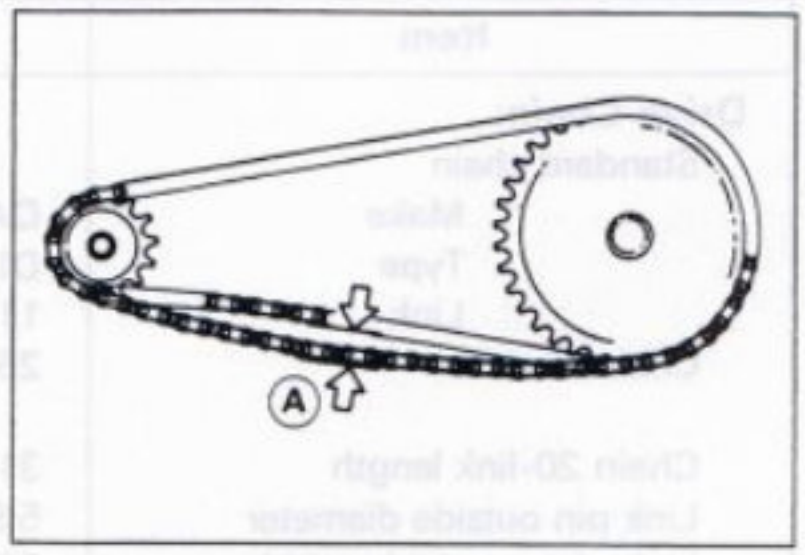

- Check the wheel alignment (see Wheel Alignment Inspection).
- Rotate the rear wheel to find the position where the chain is tightest.
- Measure the vertical movement (chain slack) [A] midway between the sprockets.

★If the chain slack exceeds the standard, adjust it.

Chain Slack

Standard:	**25 ~ 35 mm**
Too Tight:	**less than 25 mm**
Too Loose:	**more than 40 mm**

Drive Chain Slack Adjustment

- Loosen the left and right chain adjuster clamp bolts [A].
- Using an Allen wrench, turn the adjusters [B] forward or rearward until the drive chain has the correct amount of chain slack.
- Tighten the chain adjuster clamp bolts.

Torque – Chain Adjuster Clamp Bolts: 39 N-m (4.0 kg-m, 29 ft-lb)

- Recheck the chain slack, and readjust if necessary.

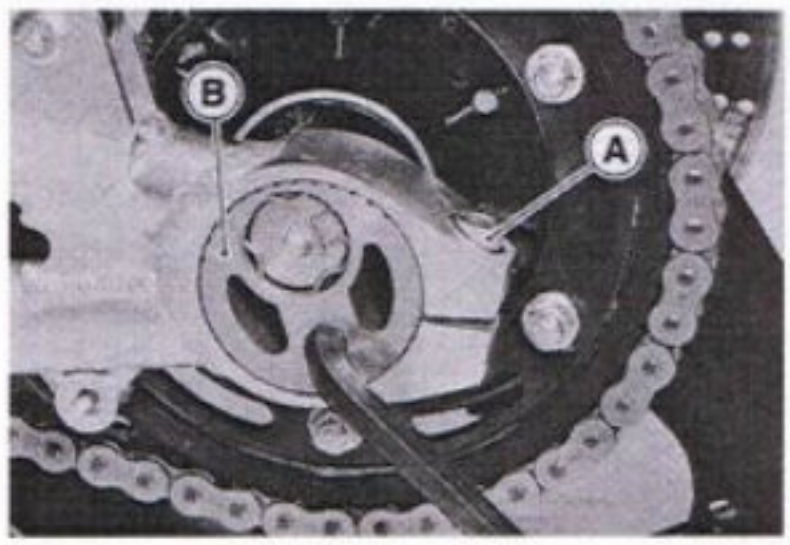

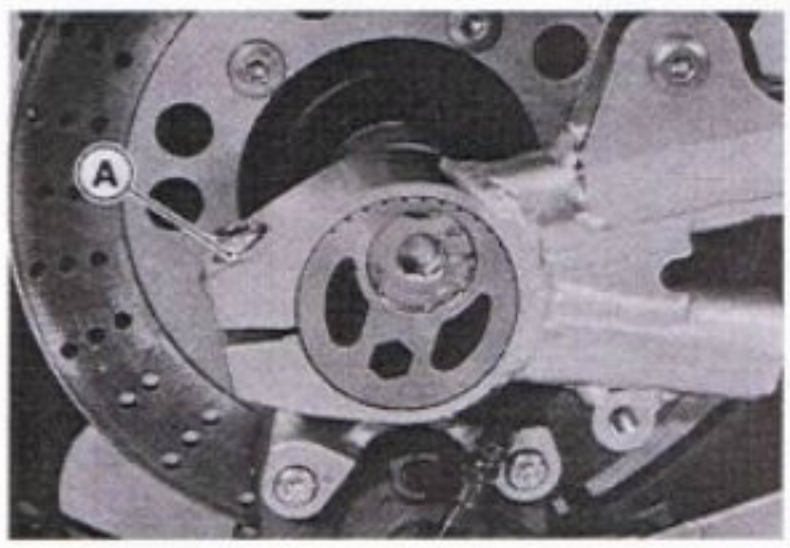

Wheel Alignment Inspection

- Check that the left and right notches [A] on the swingarm should point to the same marks or positions [B] on the left and right adjuster.

★If they do not, adjust the wheel alignment.

⚠WARNING

Misalignment of the wheel will result in abnormal wear and may result in an unsafe riding condition.

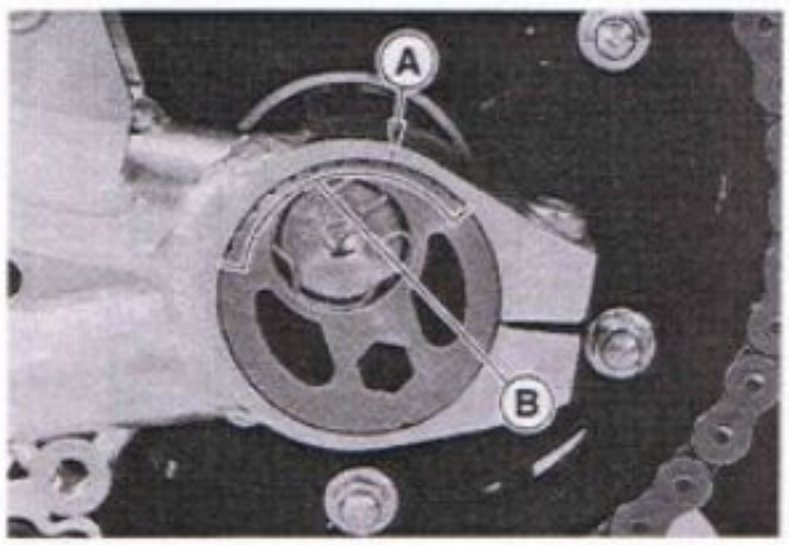

Wheel Alignment Adjustment

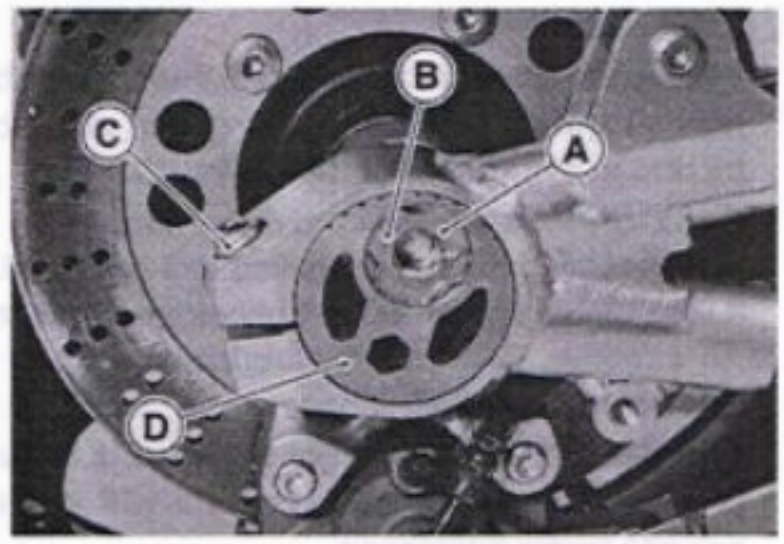

- Remove the right retaining ring [A] from the axle shaft.
- Loosen the axle nut [B].
- Loosen the right chain adjuster clamp bolt [C], and turn the right chain adjuster [D] so that the left and right notches on the swingarm may point to the same marks or positions on the left and right adjusters.
- Tighten:

Torque – Chain Adjuster Clamp Bolt: 39 N-m(4.0 kg-m, 29 ft-lb)
Rear Axle Nut: 98 N-m (10.0 kg-m, 72 ft-lb)

Wear Inspection

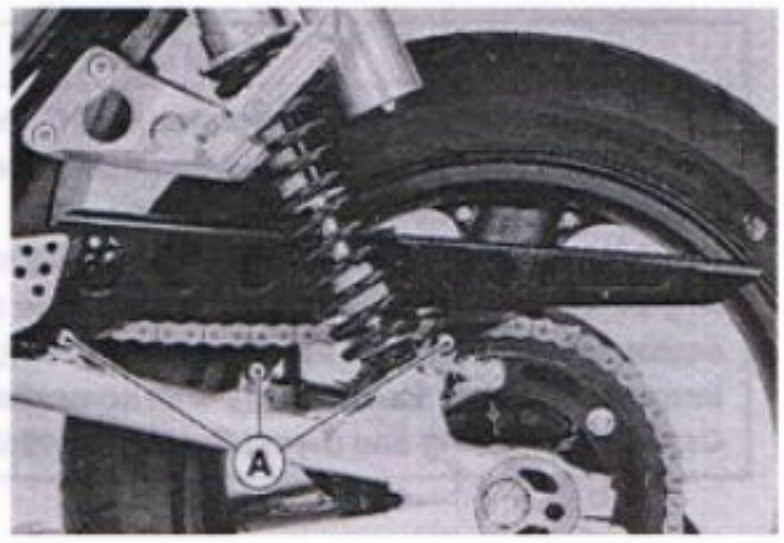

- Remove:
  Mounting Screws [A]
  Drive Chain Cover
- Rotate the rear wheel to inspect the drive chain for damaged rollers, and loose pins and links.

★If there is any irregularity, replace the drive chain.
★Lubricate the drive chain if it appears dry.

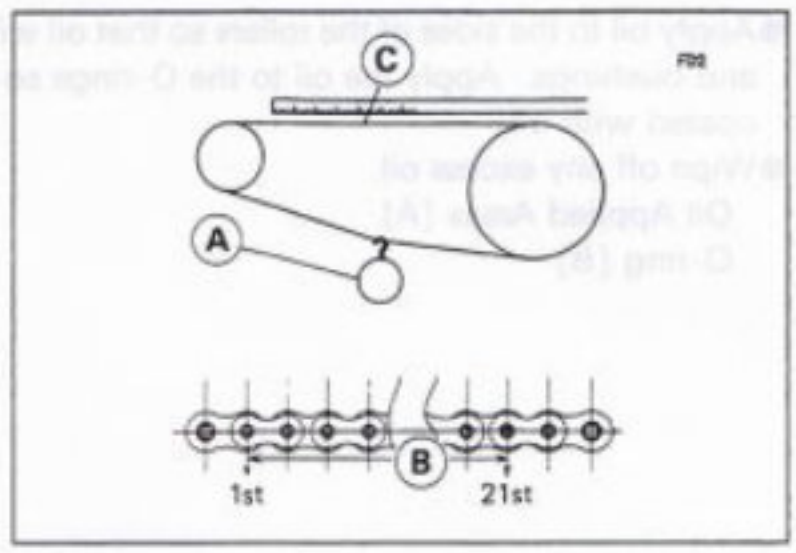

- Stretch the chain taut by hanging a 10 kg (22 lb) weight [A] on the chain.
- Measure the length of 20 links [B] on the straight part [C] of the chain from the pin center of the 1st pin to the pin center of the 21st pin. Since the chain may wear unevenly, take measurements at several places.

★If any measurements exceed the service limit, replace the chain. Also, replace the front and rear sprockets when the drive chain is replaced.

Chain 20-link Length

Standard:	**317.5 ~ 318.2 mm**
Service Limit:	**323 mm**

⚠WARNING

If the drive chain wear exceeds the service limit, replace the chain or an unsafe riding condition may result. A chain that brakes or jumps off the sprockets could snag on the engine sprocket or lock the rear wheel, severely damaging the motorcycle and causing it to go out of control.
For sagely, use only the standard chain. It is an endless type and should not be cut for installation.

Standard Chain

Make:	**DAIDO**
Type:	**DID 50ZV2**
Link:	**110 Links**

Lubrication

○The chain should be lubricated with a lubricant which will both prevent the exterior from rusting and also absorb shock and reduce friction in the interior of the chain.

★If the chain is especially dirty, it should be washed in diesel oil or kerosene, and afterward soaked in a heavy oil. Shake the chain while it is in the oil so that oil will penetrate to the inside of each roller.

●An effective, good quality lubricant specially formulated for chains is best for regular chain lubrication.

★If a special lubricant is not available, a heavy oil such as SAE 90 is preferred to a lighter oil because it will stay on the chain longer and provide better lubrication.

CAUTION

The O-rings between the side plates seal in the lubricant between the pin and the bushing. To avoid damaging the O-rings and resultant loss of lubricant, observe the following rules.
Use only kerosene or diesel oil for cleaning an O-ring drive chain.
Any other cleaning solution such as gasoline or trichloroethylene will cause deterioration and swelling of the O-ring.
Immediately blow the chain dry with compressed air after cleaning.
Complete cleaning and drying the chain within 10 minutes.

●Apply oil to the sides of the rollers so that oil will penetrate to the rollers and bushings. Apply the oil to the O-rings so that the O-rings will be coated with oil.

●Wipe off any excess oil.

Oil Applied Areas [A]
O-ring [B]

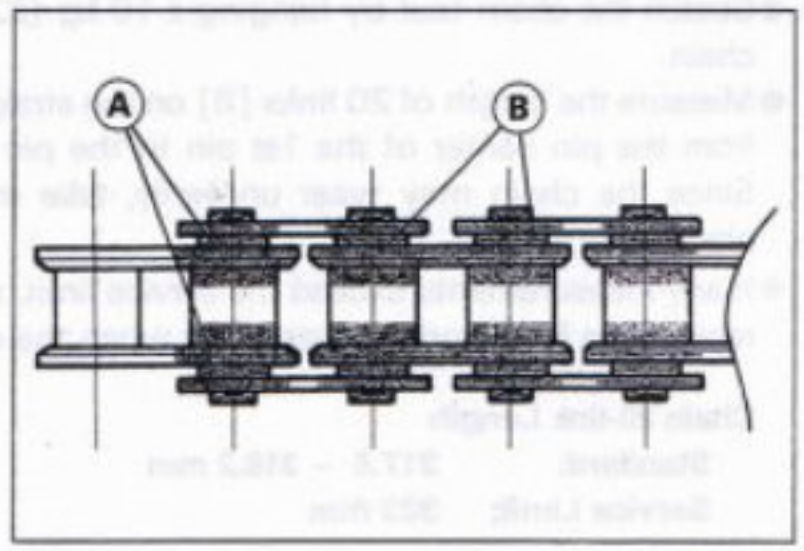

Drive Chain Removal

NOTE

○*Since the drive chain is installed through the swingarm, The chain cannot be removed other than by cutting it. Prepare the new link pin, link plate, grease seals, and tools for rejoining the chain.*

●Remove the chain cover.

●Using a suitable tool [A], cut the drive chain by removing the link pins [B].

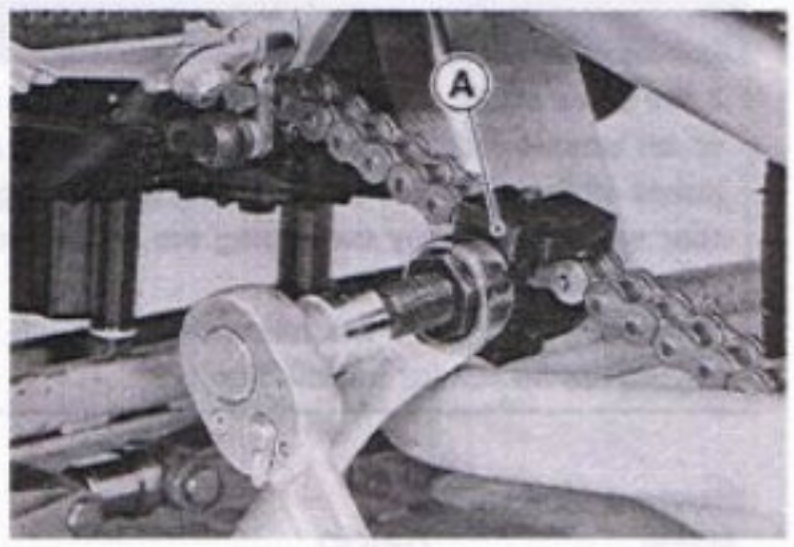

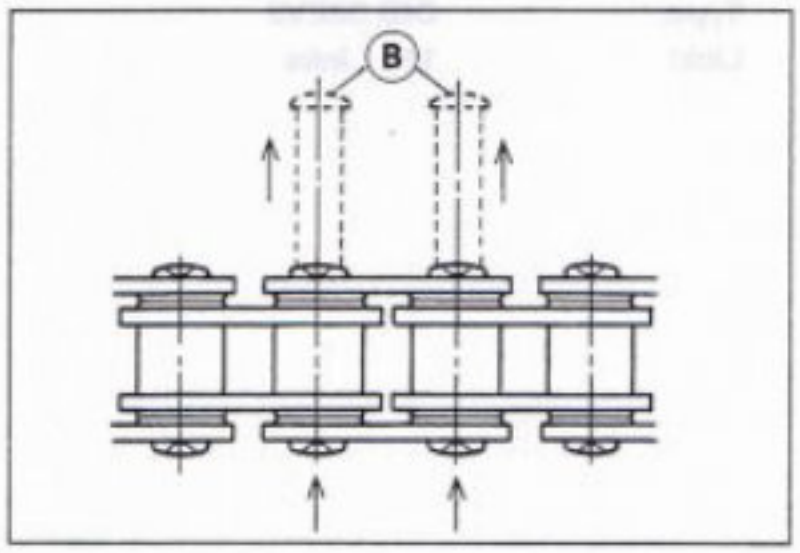

Drive Chain Installation

- Replace the link pin, link plate and grease seals.
- Apply grease to the link pins [A] and grease seals.
- Engage the drive chain on the engine and rear sprockets through the swingarm.
- Install the grease seals [B] on the link pins.
- Insert the link pins in the drive chain ends.
- Install:
  Grease Seals [C]
  Link Plate [D]

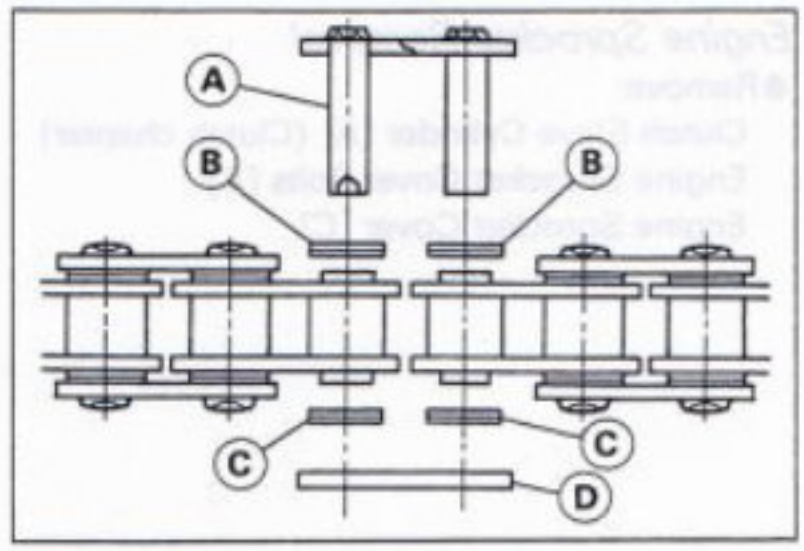

○ Install the link plate so that the mark [A] faces out.

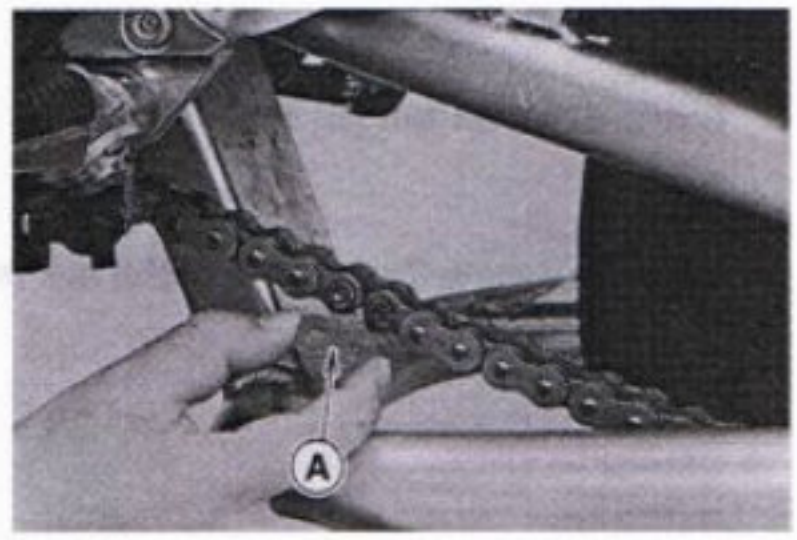

○ Using a suitable tool [A], press in the link plate to the link pins.

- Using a suitable tool [A], stake the link pin ends projecting from the plate.

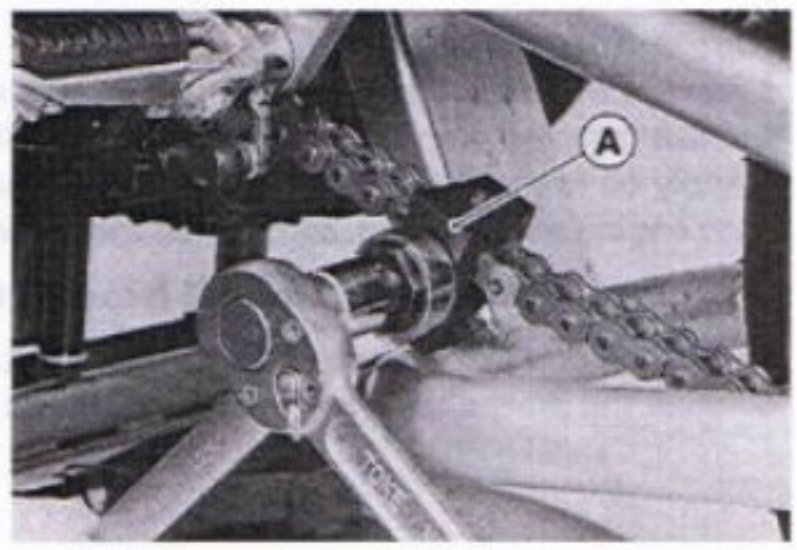

- After staking, measure the outside diameter [A] of the link pin and link plates width [B].

Link Pin Outside Diameter
Standard: 5.50 ~ 5.80 mm

Link Plates Outside Width
Standard: 22.3 ~ 22.5 mm

★ If the reading exceeds the specified length, cut and rejoin the chain again.

- Check:
  Movement of the Rollers
  Chain Slack

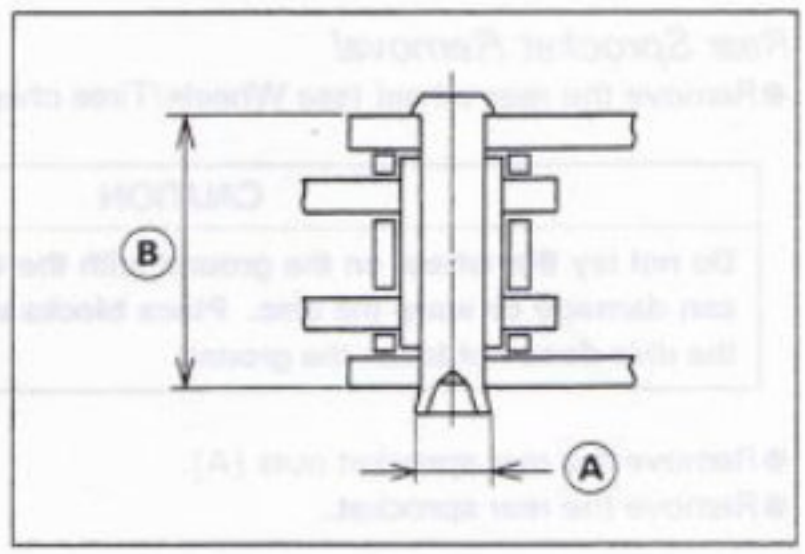

Sprocket, Coupling

Engine Sprocket Removal

- Remove:
  Clutch Slave Cylinder [A] (Clutch chapter)
  Engine Sprocket Cover Bolts [B]
  Engine Sprocket Cover [C]

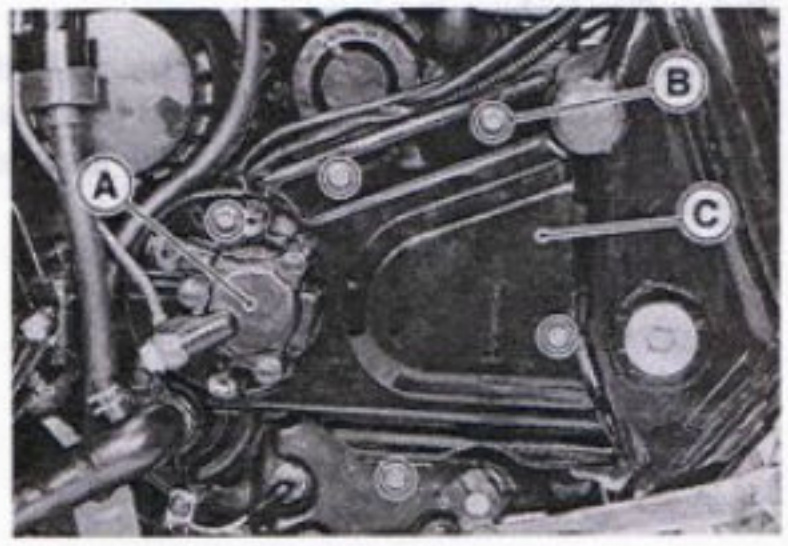

- Flatten out the bent washer [A].
- Remove:
  Engine Sprocket Nut [B] and Washer

NOTE

○ *When loosening the engine sprocket nut, hold the rear brake on.*

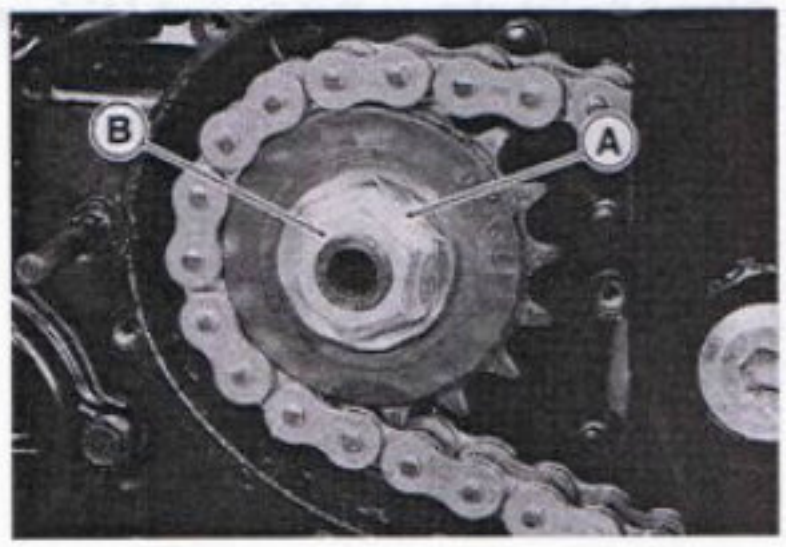

- Loosen the drive chain (see Drive Chain Slack Adjustment).
- Raise the rear wheel off the ground.

Special Tool – Jack: 57001-1238

- Remove the drive chain from the rear sprocket toward the right.
- Pull the engine sprocket [A] off the output shaft along with the chain.
- Remove the engine sprocket.

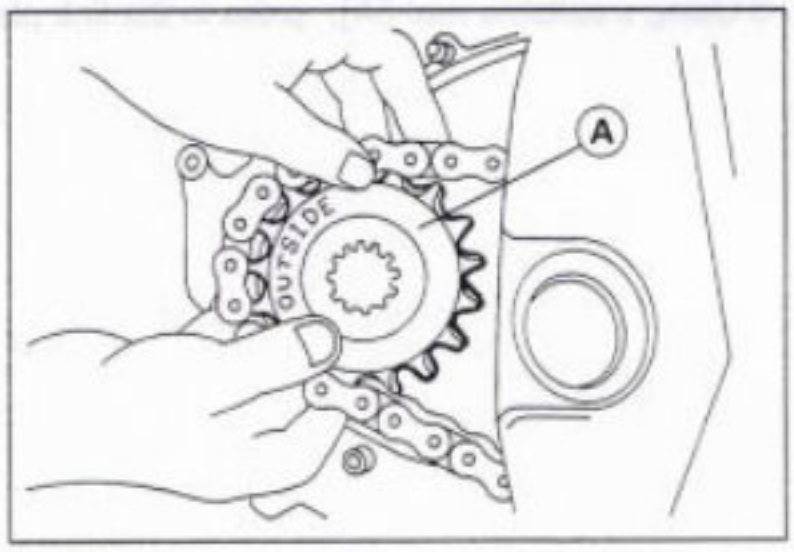

Engine Sprocket Installation

- Replace the engine sprocket washer and the rear axle cotter pin.
- Install the engine sprocket so that the "OUTSIDE" mark [A] faces out.
- Apply oil to the threads of the output shaft and the seating surface of the engine sprocket nut, and tighten the engine sprocket nut.

Torque – Engine Sprocket Nut: 125 N-m (13.0 kg-m, 94 ft-lb)

- Bend the one side of the washer over the nut.
- Adjust the drive chain (see Drive Chain Slack Adjustment).

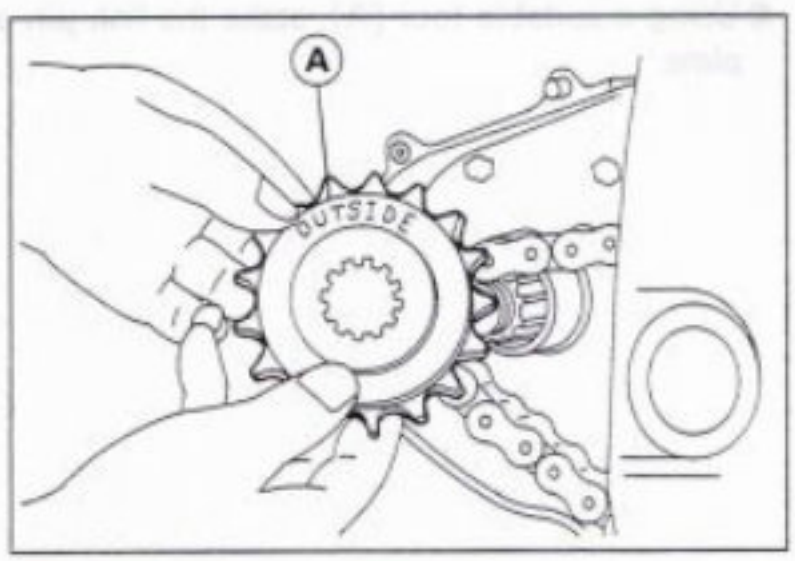

Rear Sprocket Removal

- Remove the rear wheel (see Wheels/Tires chapter).

CAUTION
Do not lay the wheel on the ground with the disc facing down. This can damage or warp the disc. Place blocks under the wheel so that the disc does not touch the ground.

- Remove the rear sprocket nuts [A].
- Remove the rear sprocket..

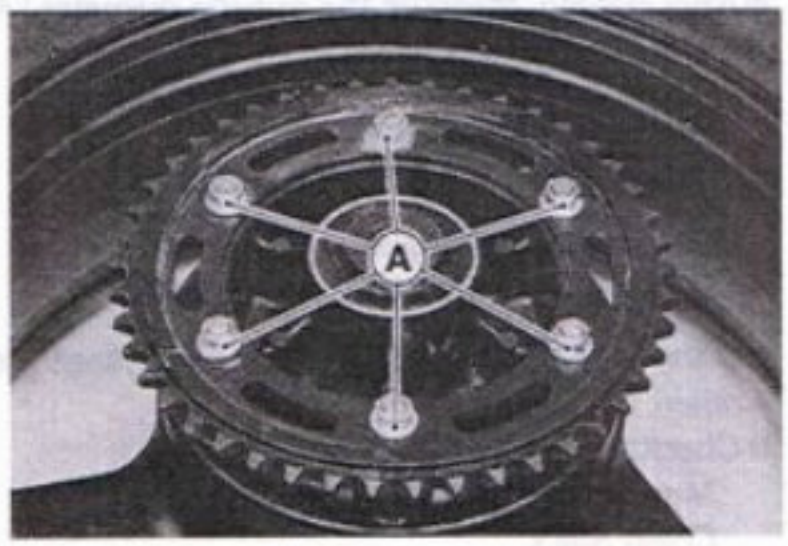

Rear Sprocket, Coupling Installation

- Install the sprocket facing the tooth number marking [A] outward.
- Tighten the rear sprocket nuts.

Torque – Rear Sprocket Nuts: 74 N-m (7.5 kg-m, 54 ft-lb)

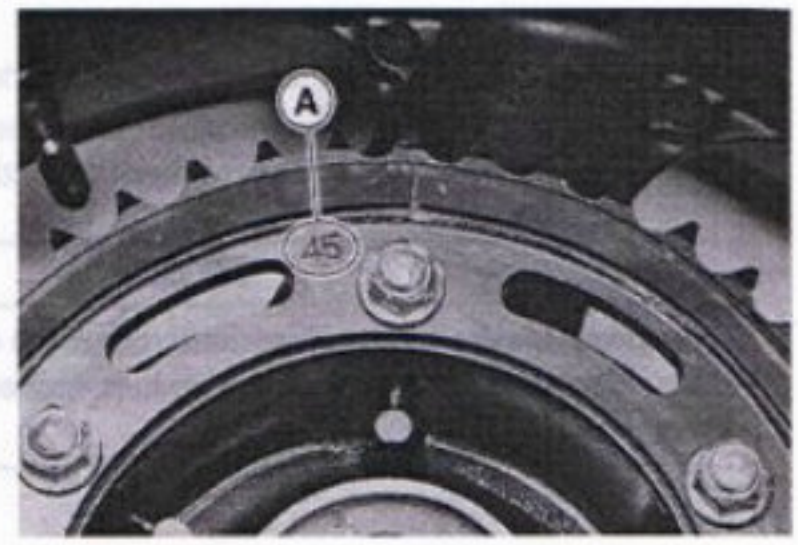

- Grease the following and install the coupling.
  Grease Seal [A]
  Coupling Internal Surface [B]
- Install the rear wheel(see Wheels/ Tires chapter).

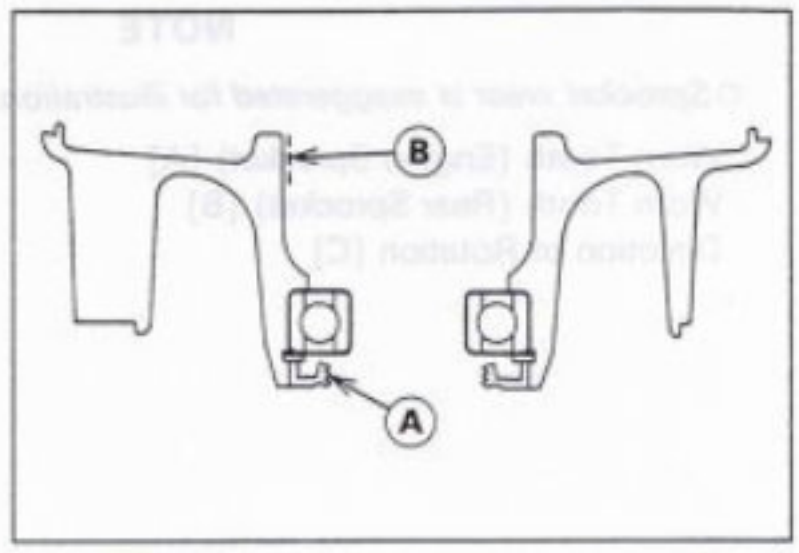

Coupling Bearing Removal

- Remove:
  Coupling
  Grease Seal
  Circlip

Special Tool – Inside Circlip Pliers: 57001-143

- Remove the bearing [A] by tapping from the wheel side.

Special Tool – Bearing Driver Set: 57001-1129 [B]

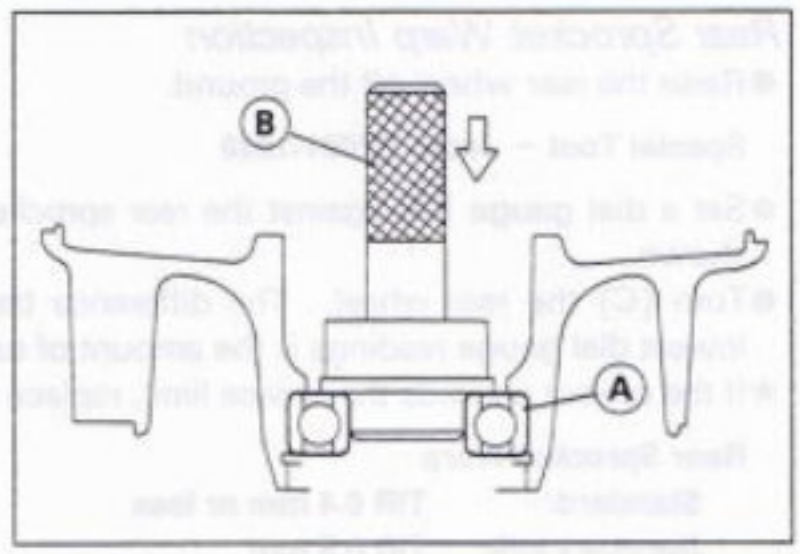

Coupling Bearing Installation

- Replace the bearing with a new one.
- Press in the bearing [A] until it bottoms out.

Special Tool – Bearing Driver Set: 57001-1129 [B]

- Replace the circlip with a new one.

Special Tool – Inside Circlip Pliers: 57001-143

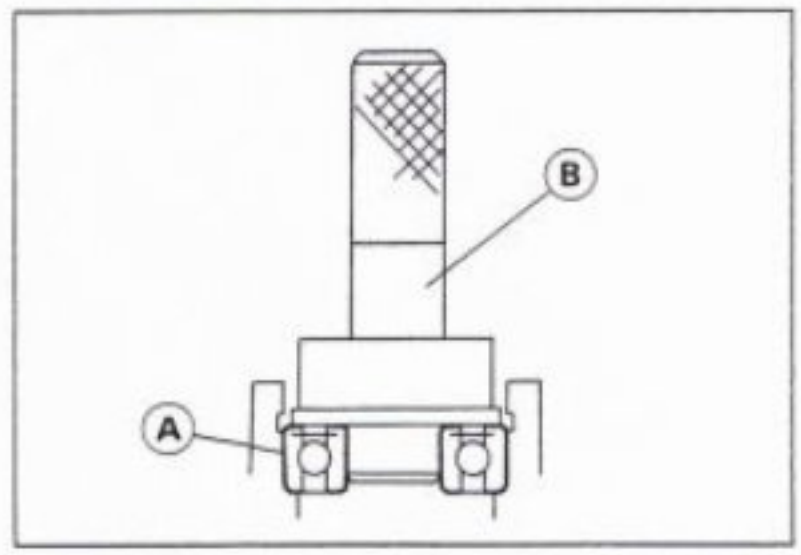

Damper Inspection

- Remove the rear wheel coupling, and inspect the rubber dampers [A].
- Replace the damper if it appears damaged or deteriorated.

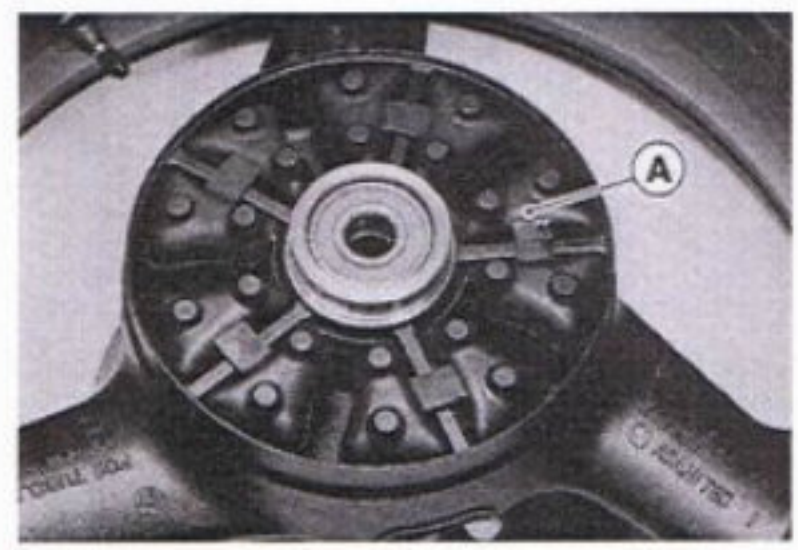

Sprocket Wear

●Visually inspect the engine and rear sprocket teeth.

★If the teeth are worn as illustrated, replace the sprockets, and inspect the drive chain (see Drive Chain Wear Inspection).

CAUTION
If a sprocket requires replacement, the drive chain is probably worn also. Upon replacing the rear sprocket, inspect the chain and engine sprocket.

NOTE

○*Sprocket wear is exaggerated for illustration.*

Worn Tooth (Engine Sprocket) [A]
Worn Tooth (Rear Sprocket) [B]
Direction of Rotation [C]

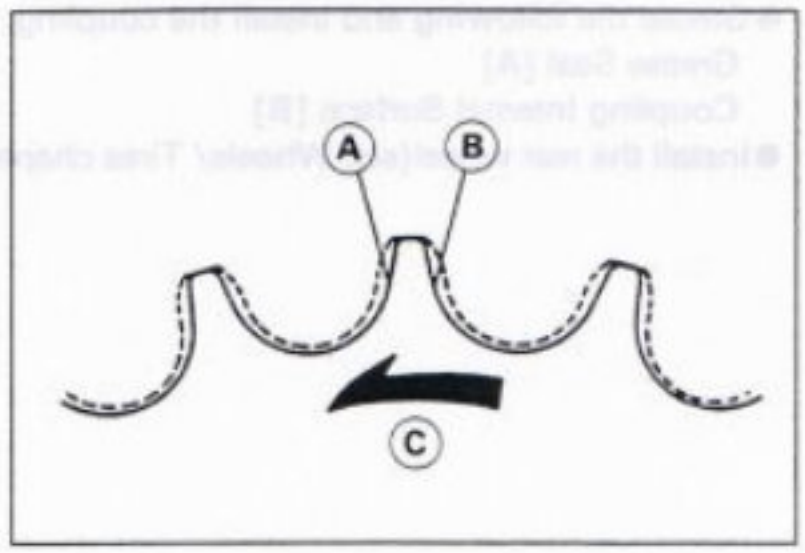

Rear Sprocket Warp Inspection

●Raise the rear wheel off the ground.

Special Tool – Jack: 57001-1238

●Set a dial gauge [A] against the rear sprocket [B] near the teeth as shown.

●Turn [C] the rear wheel. The difference between the highest and lowest dial gauge readings is the amount of runout (warp).

★If the runout exceeds the service limit, replace the rear sprocket.

Rear Sprocket Warp

Standard:	**TIR 0.4 mm or less**
Service Limit:	**TIR 0.5 mm**

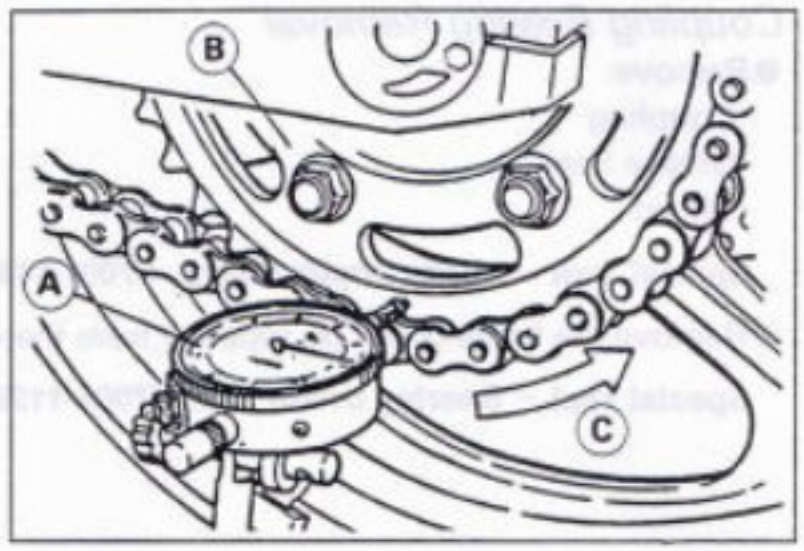

Brakes

Table of Contents

Exploded View 11-2
Specifications 11-4
Brake Pedal 11-5
Brake Pedal Position Inspection 11-5
Brake Pedal Position Adjustment 11-5
Brake Fluid 11-6
Level Inspection 11-6
Brake Fluid Change 11-6
Bleeding the Brake Line 11-7
Calipers 11-10
Caliper Removal 11-10
Caliper Installation 11-10
Front Caliper Disassembly 11-10
Rear Caliper Disassembly 11-11
Caliper Assembly 11-12
Brake Pads 11-13
Front Brake Pad Removal 11-13
Front Brake Pad Installation 11-13
Rear Brake Pad Removal 11-13
Rear Brake Pad Installation 11-14
Lining Wear 11-14
Master Cylinder 11-15
Front Master Cylinder Removal 11-15
Front Master Cylinder Installation 11-15
Rear Master Cylinder Removal 11-15
Rear Master Cylinder Installation 11-16
Front Master Cylinder Disassembly 11-16
Rear Master Cylinder Disassembly 11-16
Master Cylinder Assembly 11-17
Master Cylinder Inspection (Visual Inspection) 11-17
Brake Disc 11-18
Brake Disc Removal 11-18
Brake Disc Installation 11-18
Brake Disc Wear 11-18
Brake Disc Warp 11-18
Brake Hose 11-19
Brake Hose Removal/Installation 11-19
Brake Hose Inspection 11-19

Exploded View

B: Apply brake fluid.
G: Apply grease.
R: Replacement Parts
S: Follow the specific tightening sequence.
Si: Apply silicone grease (ex. PBC grease).
L: Apply a non-permanent locking agent.

T1: 1.0 N-m (0.10 kg-m, 9 in-lb)
T2: 1.5 N-m (0.15 kg-m, 13 in-lb)
T3: 5.9 N-m (0.60 kg-m, 52 in-lb)
T4: 32 N-m (3.3 kg-m, 24 ft-lb)
T5: 34 N-m (3.5 kg-m, 25 ft-lb)
T6: 6.9 N-m (0.70 kg-m, 61 in-lb)
T7: 7.8 N-m (0.80 kg-m, 69 in-lb)
T8: 8.8 N-m (0.90 kg-m, 78 in-lb)
T9: 18 N-m (1.8 kg-m, 13.0 ft-lb)
T10: 21 N-m (2.1 kg-m, 15.0 ft-lb)
T11: 23 N-m (2.3 kg-m, 16.5 ft-lb)
T12: 25 N-m (2.5 kg-m, 18.0 ft-lb)
T13: 2.9 N-m (0.30 kg-m, 26 in-lb)
T14: 27 N-m (2.8 kg-m, 20 ft-lb)

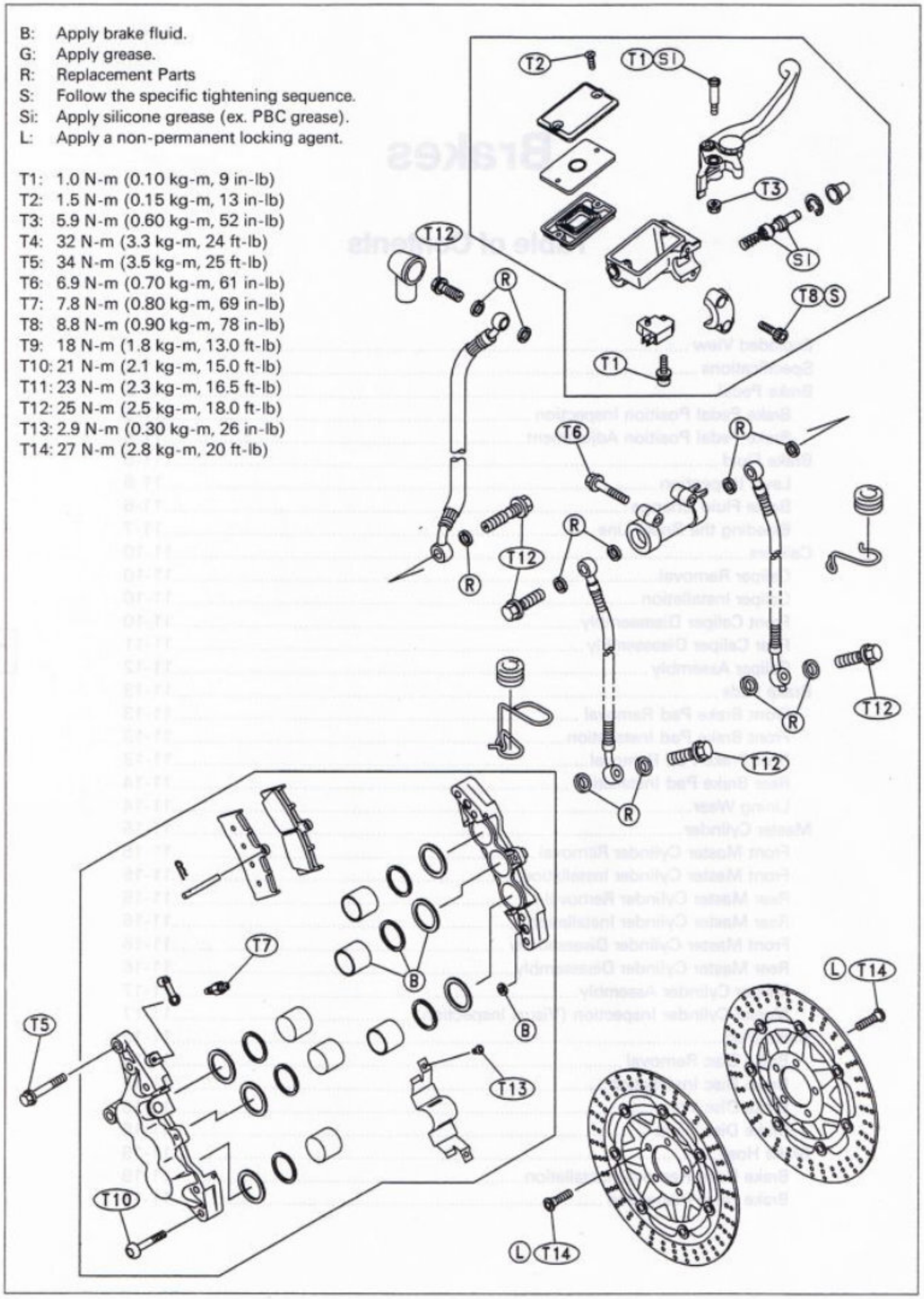

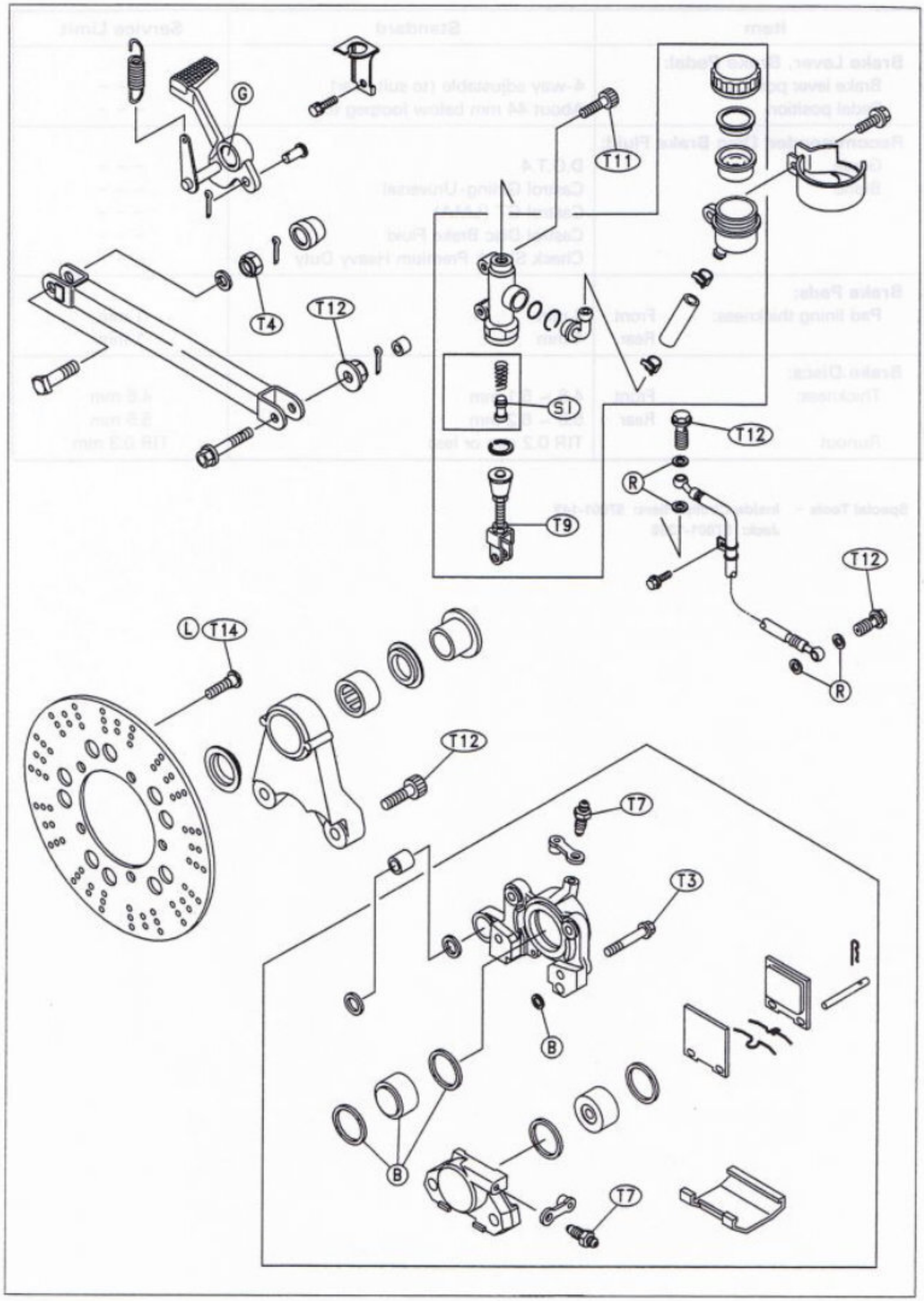
G
T11
T4
T12
S1
T12
R
T9
T12
R
L
T14
T12
T7
T3
R
B
B
T7

Specifications

Item		Standard	Service Limit
Brake Lever, Brake Pedal:			
Brake lever position		4-way adjustable (to suit rider)	– – –
Pedal position		About 44 mm below footpeg top	– – –
Recommended Disc Brake Fluid:			
Grade		D.O.T.4	– – –
Brand		Castrol Girling-Universal	– – –
		Castrol GT (LMA)	– – –
		Castrol Disc Brake Fluid	– – –
		Check Shock Premium Heavy Duty	– – –
Brake Pads:			
Pad lining thickness:	Front	4 mm	1 mm
	Rear	4 mm	1 mm
Brake Discs:			
Thickness:	Front	4.8 ~ 5.1 mm	4.5 mm
	Rear	5.8 ~ 6.2 mm	5.5 mm
Runout		TIR 0.2 mm or less	TIR 0.3 mm

Special Tools – Inside Circlip Pliers: 57001-143
Jack: 57001-1238

Brake Pedal

Brake Pedal Position Inspection

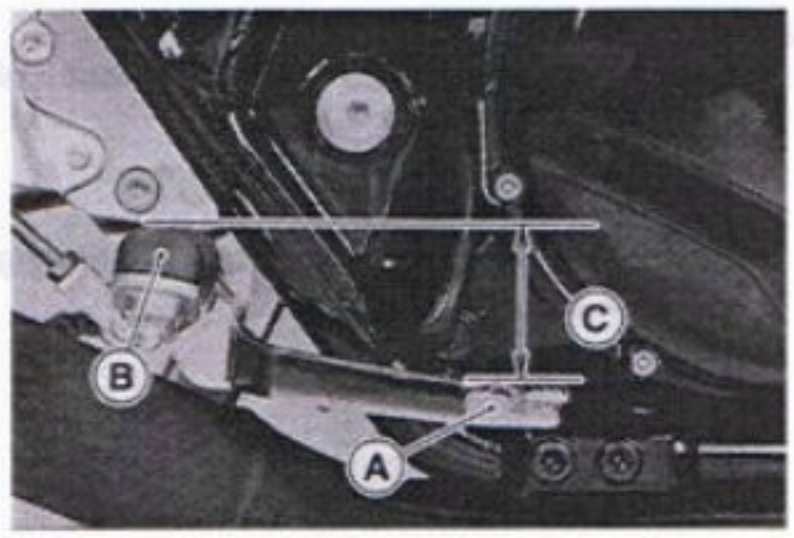

●Check that the brake pedal [A] is in the correct position.
[B] Footpeg

Pedal Position
Standard: About 44 mm [C] below top of footpeg

★If it is incorrect, adjust the brake pedal position.

Brake Pedal Position Adjustment

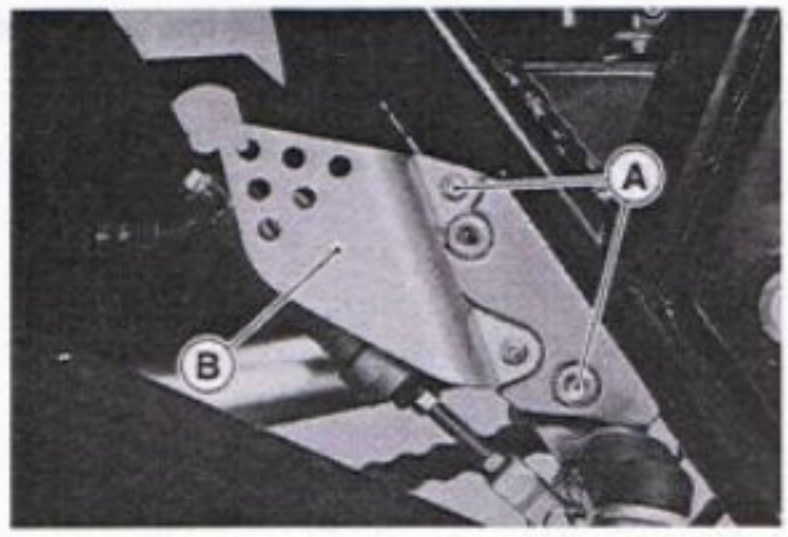

NOTE

○*Usually it is not necessary to adjust the pedal position, but always adjust it when the master cylinder is disassembled or pedal position is incorrect.*

●Remove the bolts [A] and rear master cylinder cover [B].

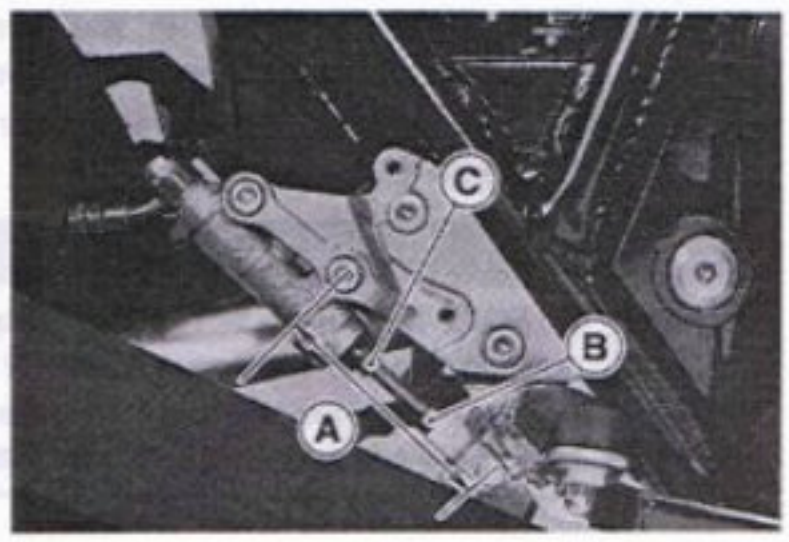

●Measure the length indicated in the figure.

Length [A]
Standard: 100.5 ± 1 mm

★If it is specified length, the brake pedal may be deformed or incorrectly installed.

★If it is not within the specified length, adjust the push rod in the master cylinder as following.

○Loosen the push rod locknut [B].
○Turn the hex head [C] of the push rod to obtain the specified length.
○Tighten the locknut.

Torque – Rear Master Cylinder Push Rod Locknut: 18 N-m (1.8 kg-m, 13.0 ft-lb)

●Check the brake light switch operation (see Rear Brake Light Switch Adjustment in Electrical System chapter).

Brake Fluid

Level Inspection

●Check that the brake fluid level in the front brake reservoir [A] is above the lower level line [B].

NOTE

○*Hold the reservoir horizontal by turning the handlebar when checking brake fluid level.*

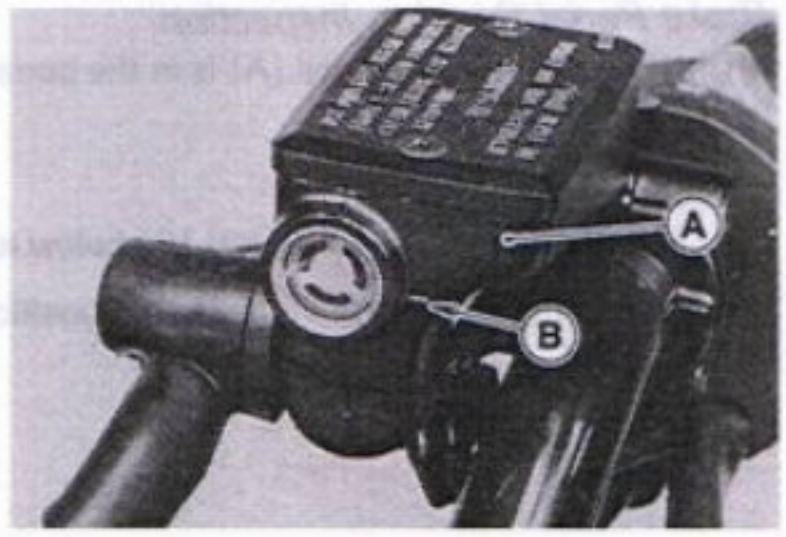

★If the fluid level is lower than the lower level line, fill the reservoir to the upper level line [A].

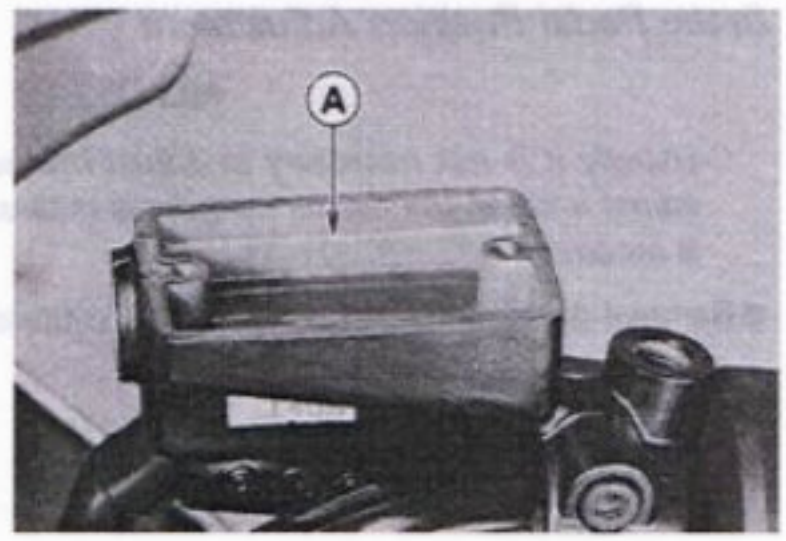

●Check that the brake fluid level in the rear brake reservoir [A] is between the upper [B] and the lower [C] level lines.

★If the fluid level is lower than the lower level line, remove the side cover and fill the reservoir to the upper level line.

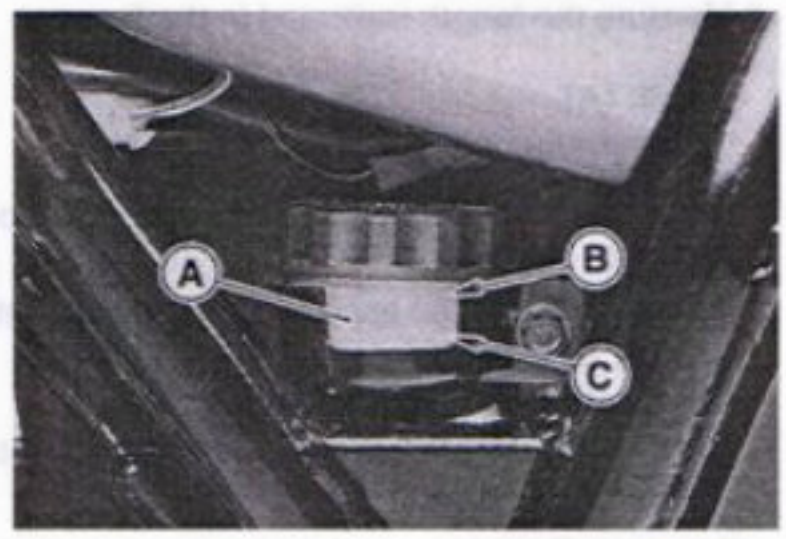

⚠WARNING

Change the brake fluid in the brake line completely if the brake fluid must be refilled but the type and brand of the brake fluid that is already in the reservoir are unidentified. After changing the fluid, use only the same type and brand of fluid thereafter.

Recommended Disc Brake Fluid
Grade: D.O.T.4
Brand: Castrol Girling-Universal
Castrol GT (LMA)
Castrol Disc Brake Fluid
Check Shock Premium Heavy Duty

Brake Fluid Change

NOTE

○*The procedure to change the front brake fluid is as follows. Changing the rear brake fluid is the same as for the front brake.*

- Level the brake fluid reservoir.
- Remove the reservoir cap.
- Remove the rubber cap from the bleed valve [A] on the caliper.
- Attach a clear plastic hose [B] to the bleed valve, and run the other end of the hose into a container.
- Fill the reservoir with fresh specified brake fluid.

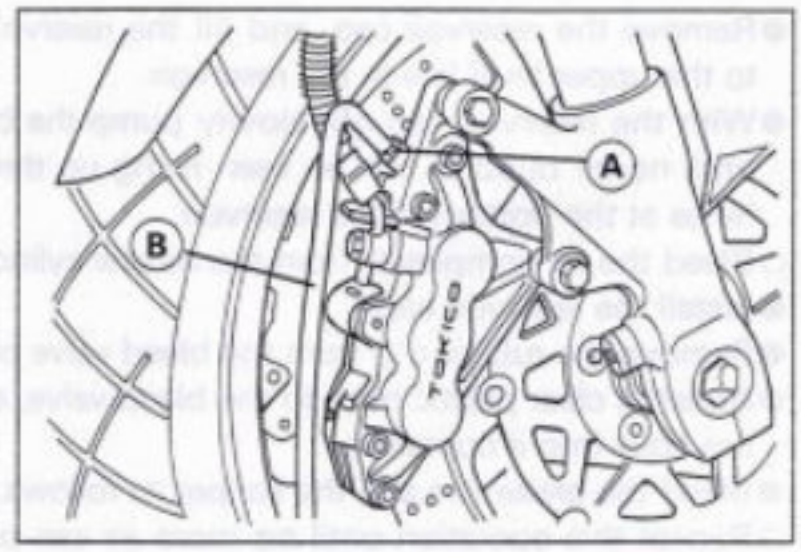

- Change the brake fluid as follows:

○ Repeat this operation until fresh brake fluid comes out from the plastic hose or the color of the fluid changes.

1. Open the bleed valve [A].
2. Apply the brake and hold it [B].
3. Close the bleed valve [C].
4. Release the brake [D].

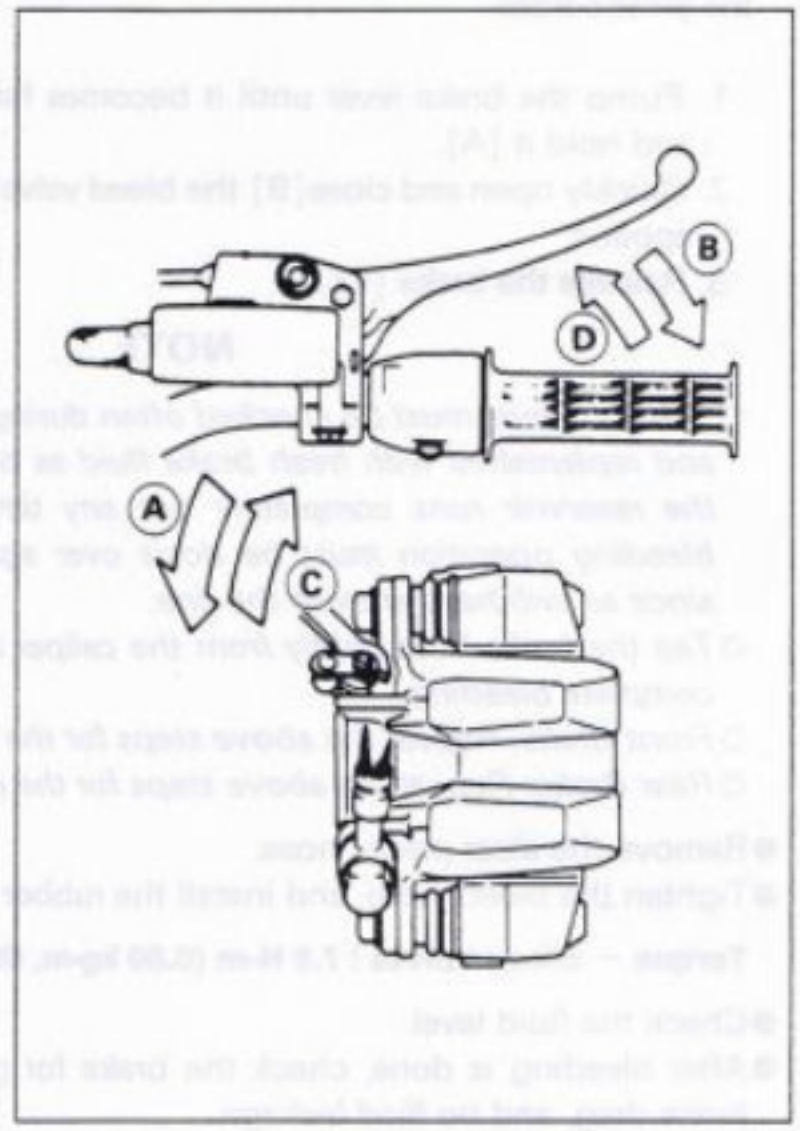

NOTE

○ *The fluid level must be checked often during the changing operation and replenished with fresh brake fluid. If the fluid in the reservoir runs out any time during the changing operation, the brakes will need to be bled since air will have entered the brake line.*

○ *Front Brake: Repeat the above steps for the other caliper.*

○ *Rear Brake: Repeat the above steps for the other bleed valve.*

- Remove the clear plastic hose.
- Install the reservoir cap.
- Tighten the bleed valve, and install the rubber cap.

Torque – Bleed Valves : 7.8 N-m (0.80 kg-m, 69 in-lb)

- After changing the fluid, check the brake for good braking power, no brake drag, and no fluid leakage.

★ If necessary, bleed the air from the lines.

Bleeding the Brake Line

The brake fluid has a very low compression coefficient so that almost all the movement of the brake lever or pedal is transmitted directly to the caliper for braking action. Air, however, is easily compressed. When air enters the brake lines, brake lever or pedal movement will be partially used in compressing the air. This will make the lever or pedal feel spongy, and there will be a loss in braking power.

⚠WARNING

Be sure to bleed the air from the brake line whenever brake lever or pedal action feels soft or spongy after the brake fluid is changed, or whenever a brake line fitting has been loosened for any reason.

NOTE

○ *The procedure to bleed the front brake line is as follows. Bleeding the rear brake line is the same as for the front brake.*

- ●Remove the reservoir cap, and fill the reservoir with fresh brake fluid to the upper level line in the reservoir.
- ●With the reservoir cap off, slowly pump the brake lever several times until no air bubbles can be seen rising up through the fluid from the holes at the bottom of the reservoir.
- ○Bleed the air completely from the master cylinder by this operation.
- ●Install the reservoir cap.
- ●Remove the rubber cap from the bleed valve on the caliper.
- ●Attach a clear plastic hose to the bleed valve, and run the other end of the hose into a container.
- ●Bleed the brake line and the caliper as follows:
- ○Repeat this operation until no more air can be seen coming out into the plastic hose.

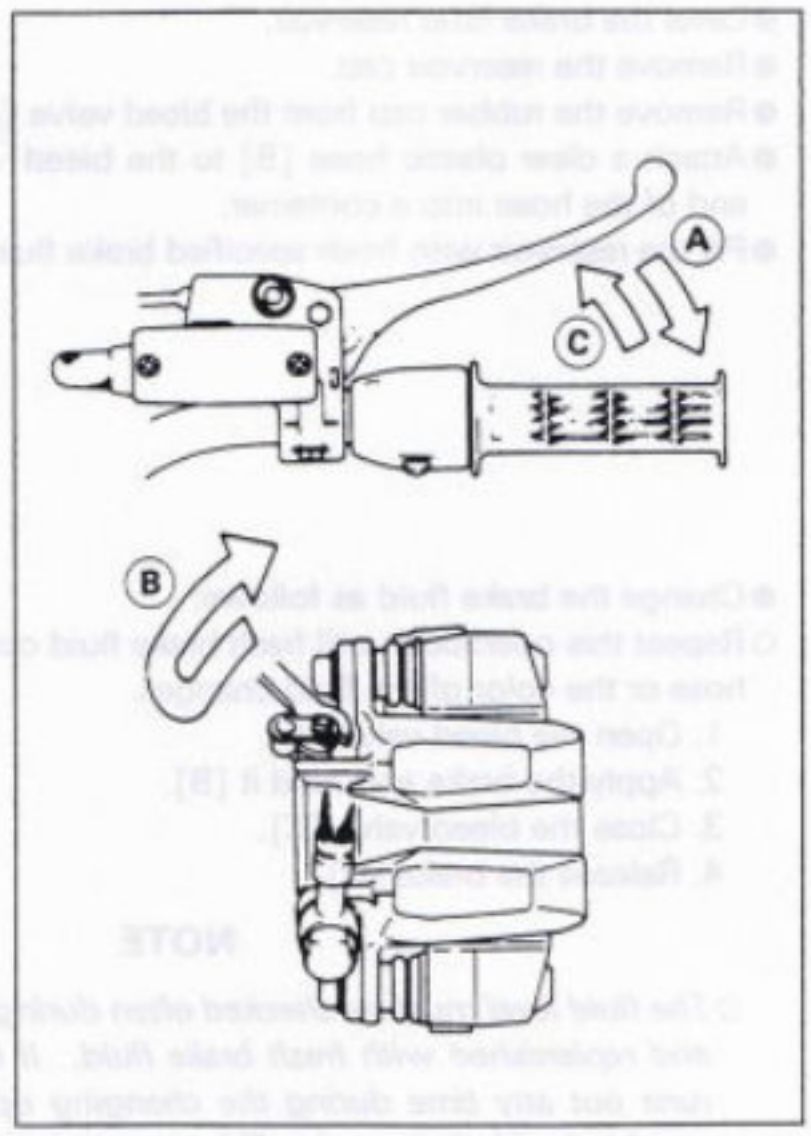

1. Pump the brake lever until it becomes hard, and apply the brake and hold it [A].
2. Quickly open and close[B] the bleed valve while holding the brake applied.
3. Release the brake [C].

NOTE

- ○*The fluid level must be checked often during the bleeding operation and replenished with fresh brake fluid as necessary. If the fluid in the reservoir runs completely out any time during bleeding, the bleeding operation must be done over again from the beginning since air will have entered the line.*
- ○*Tap the brake hose lightly from the caliper to the reservoir for more complete bleeding.*
- ○*Front Brake: Repeat the above steps for the other caliper.*
- ○*Rear Brake: Repeat the above steps for the other bleed valve.*

- ●Remove the clear plastic hose.
- ●Tighten the bleed valve, and install the rubber cap.

Torque – Bleed Valves : 7.8 N-m (0.80 kg-m, 69 in-lb)

- ●Check the fluid level.
- ●After bleeding is done, check the brake for good braking power, no brake drag, and no fluid leakage.

⚠WARNING

When working with the disc brake, observe the precautions listed below.

1. Never reuse old brake fluid.
2. Do not use fluid from a container that has been left unsealed or that has been open for a long time.
3. Do not mix two types and brands of fluid for use in the brake. This lowers the brake fluid boiling point and could cause the brake to be ineffective. It may also cause the rubber brake parts to deteriorate.
4. Don't leave the reservoir cap off for any length of time to avoid moisture contamination of the fluid.
5. Don't change the fluid in the rain or when a strong wind is blowing.
6. Except for the disc pads and disc, use only disc brake fluid, isopropyl alcohol, or ethyl alcohol for cleaning brake parts. Do not use any other fluid for cleaning these parts. Gasoline, engine oil, or any other petroleum distillate will cause deterioration of the rubber parts. Oil spilled on any part will be difficult to wash off completely and will eventually deteriorate the rubber used in the disc brake.
7. When handling the disc pads or disc, be careful that no disc brake fluid or any oil gets on them. Clean off any fluid or oil that inadvertently gets on the pads or disc with a high-flash point solvent. Do not use one which will leave an oily residue. Replace the pads with new ones if they cannot be cleaned satisfactorily.
8. Brake fluid quickly ruins painted surfaces; any spilled fluid should be completely washed away immediately.
9. If any of the brake line fittings or the bleed valve is opened at any time, the **AIR MUST BE BLED FROM THE BRAKE LINE.**

Calipers

Caliper Removal

- Loosen the banjo bolt [A] at the brake hose lower end, and tighten it loosely.
- Remove the rear torque link nut and bolt [B].
- Unscrew the caliper mounting bolts [C], and detach the caliper [D] from the disc.

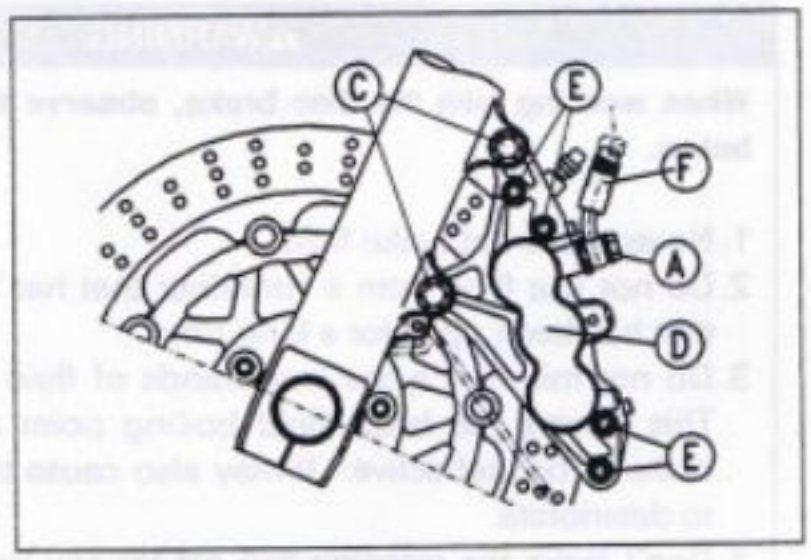

CAUTION

Do not loosen the caliper assembly bolts [E]. Take out only the caliper mounting bolts for caliper removal. Loosening the caliper assembly bolts will cause brake fluid leakage.

- Unscrew the banjo bolt and remove the brake hose [F] from the caliper (see Brake Hose Removal/Installation).

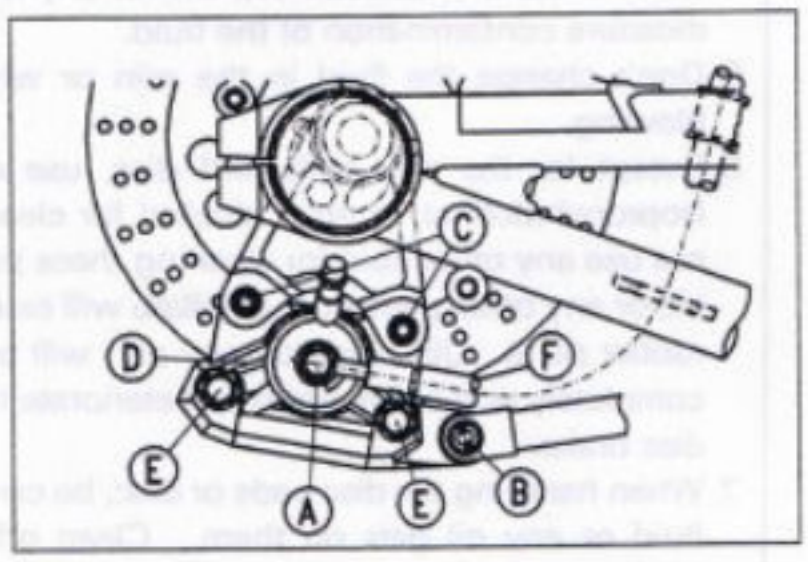

CAUTION

Immediately wash away any brake fluid that spills.

Caliper Installation

- Install the caliper and brake hose lower end.
- ○ Replace the washers that are on each side of hose fitting with new ones.
- Tighten:

Torque – Caliper Mounting Bolts (Front): 34 N-m (3.5 kg-m, 25 ft-lb)
Caliper Mounting Bolts (Rear): 25 N-m (2.5 kg-m, 18.0 ft-lb)
Torque Link Nut (Rear): 25 N-m (2.5 kg-m, 18.0 ft-lb)
Brake Hose Banjo Bolt: 25 N-m (2.5 kg-m, 18.0 ft-lb)

- Install a new cotter pin on the rear torque link bolt.
- Check the fluid level in the brake reservoirs.
- Bleed the brake line (see Bleeding the Brake Line).
- Check the brake for good braking power, no brake drag, and no fluid leakage.

⚠WARNING

Do not attempt to drive the motorcycle until a full brake lever or pedal is obtained by pumping the brake lever or pedal until the pads are against the disc. The brakes will not function on the first application of the lever or pedal if this is not done.

Front Caliper Disassembly

- Loosen the banjo bolt [A] and front caliper assembly bolts [B], and tighten them loosely.
- Remove:
  - Front Caliper (see Caliper Removal)
  - Brake Pads
  - Front Caliper Assembly Bolts
  - O-rings

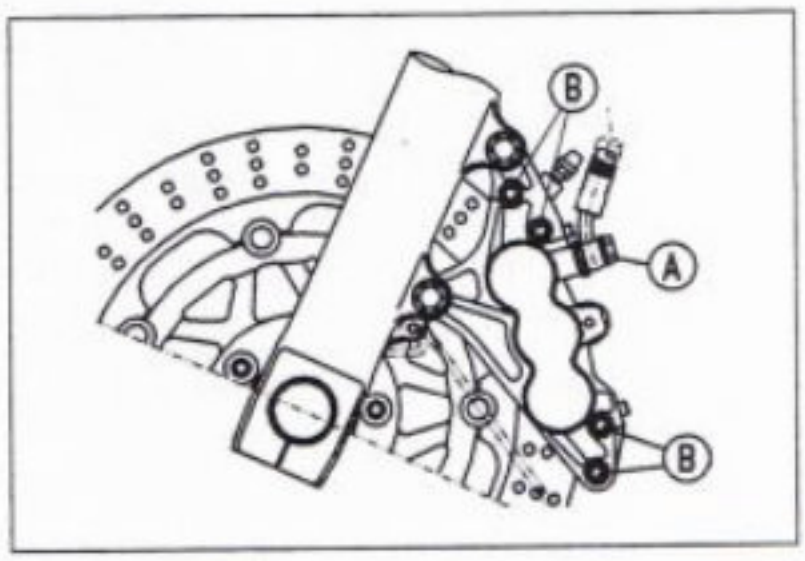

- Using compressed air, remove the pistons. One way to remove the pistons is as follows.
  - ○ Install a rubber gasket [A] and a wooden board [B] more than 10 mm thick on the caliper half, and fasten them together with a suitable bolt and nut as shown. Leave one of the oil passages [C] open.
  - ○ Lightly apply compressed air [D] to the oil passage until the pistons hit the rubber gasket. Block the hose joint opening [E] during this operation if the caliper half has the opening.
    - [F] Bolt and Nut
    - [G] Oil Passage sealed by Rubber Gasket.
    - [H] Push down.

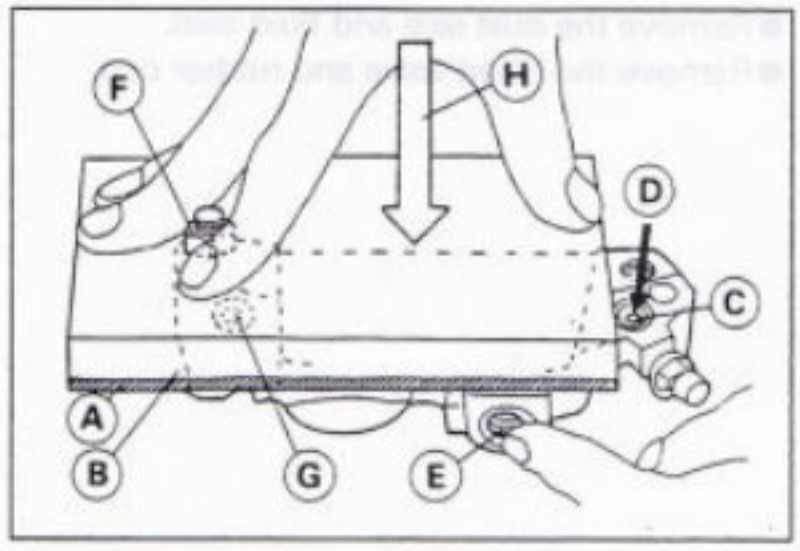

⚠WARNING

To avoid serious injury, never place your fingers or palm in front of the piston. If you apply compressed air into the caliper, the piston may crush your hand or fingers.

- ○ Pull out the pistons by hand.
- Remove the dust seals [A] and fluid seals [B].
- Remove the bleed valve [C] and rubber cap [D].
- Repeat the previous step to remove the pistons from the other side of the caliper body.

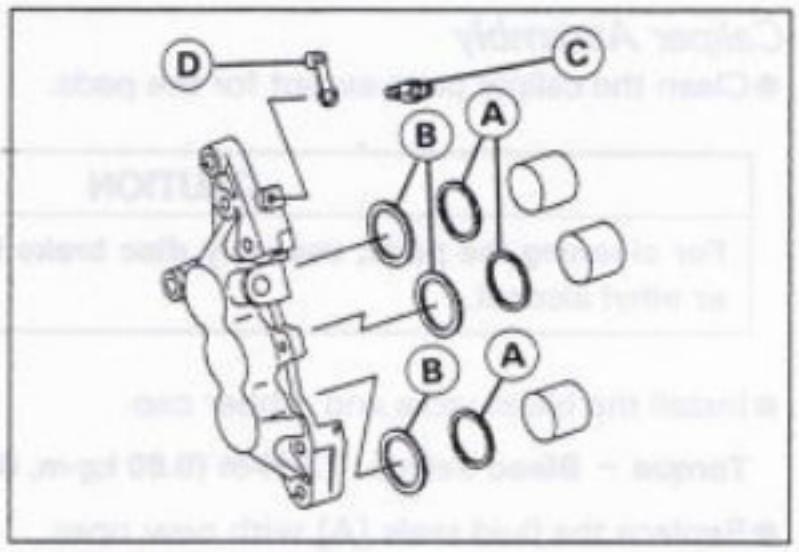

Rear Caliper Disassembly

- Loosen the banjo bolt [A] and rear caliper assembly bolts [B], and tighten them loosely.
- Remove:
  - Rear Caliper (see Caliper Removal)
  - Brake Pads
  - Rear Caliper Assembly Bolts
  - O-rings

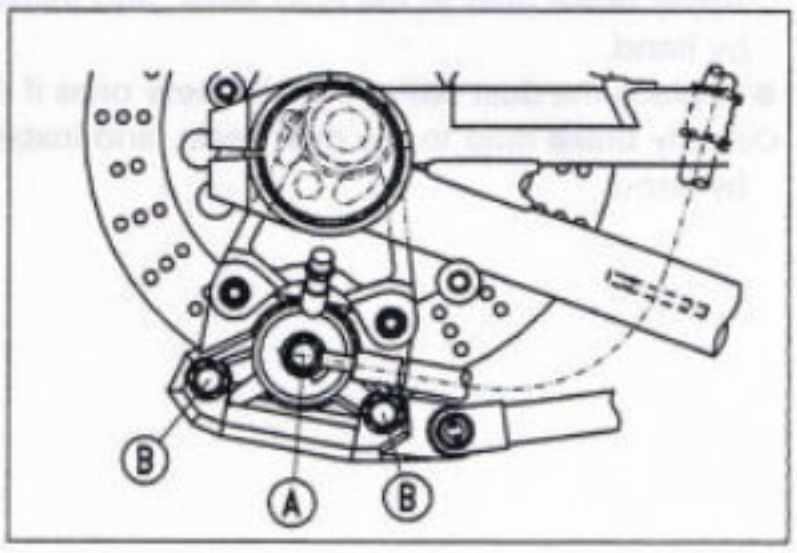

- Remove the pistons as follows:

Left Side Piston

- ○ Removal of the left side piston is the same as for the front caliper (see Front Caliper Disassembly).
  - [A] Left Side Caliper
  - [B] Rubber Gasket
  - [C] Wooden Board
  - [D] Bolt and Nut
  - [E] Apply compressed air.

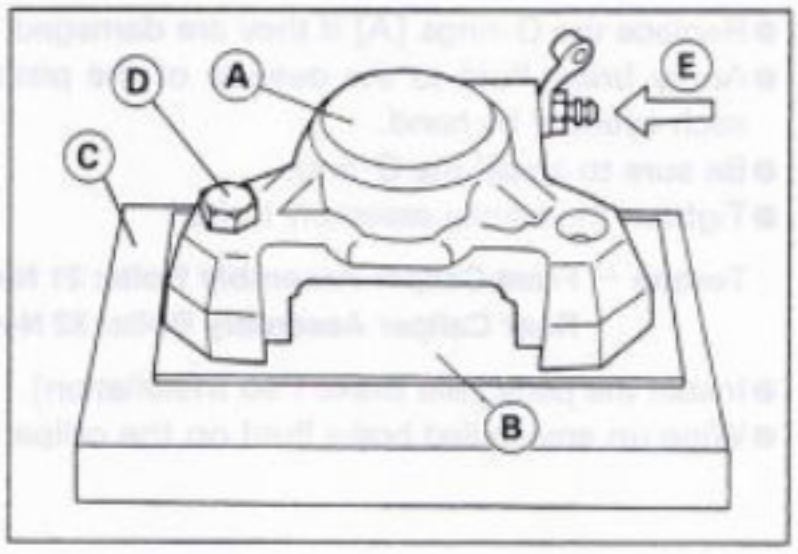

Right Side Piston

- ○ Using the rear caliper assembly bolt [A], remove the piston [B] as shown.

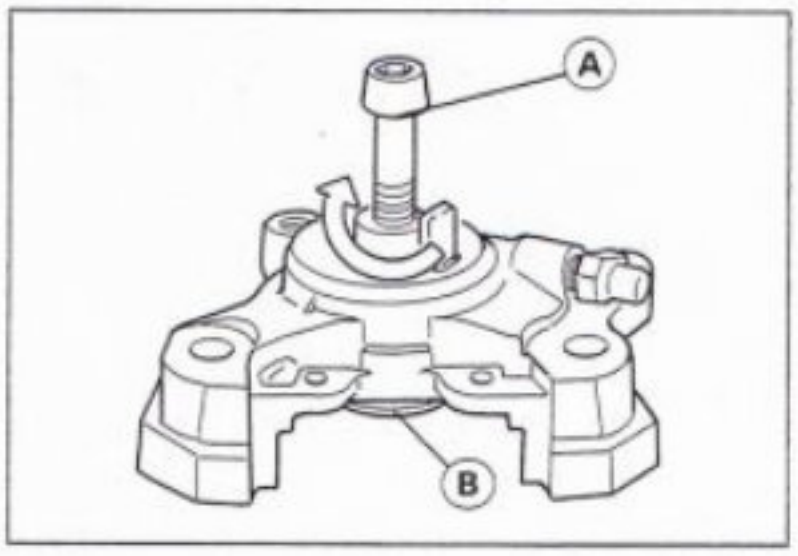

- Remove the dust seal and fluid seal.
- Remove the bleed valve and rubber cap.

Caliper Assembly

- Clean the caliper parts except for the pads.

CAUTION
For cleaning the parts, use only disc brake fluid, isopropyl alcohol, or ethyl alcohol.

- Install the bleed valve and rubber cap.

Torque – Bleed Valves : 7.8 N-m (0.80 kg-m, 69 in-lb)

- Replace the fluid seals [A] with new ones.
  - ○ Apply brake fluid to the fluid seals, and install them into the cylinders by hand.
- Replace the dust seals [B] with new ones if they are damaged.
  - ○ Apply brake fluid to the dust seals, and install them into the cylinders by hand.

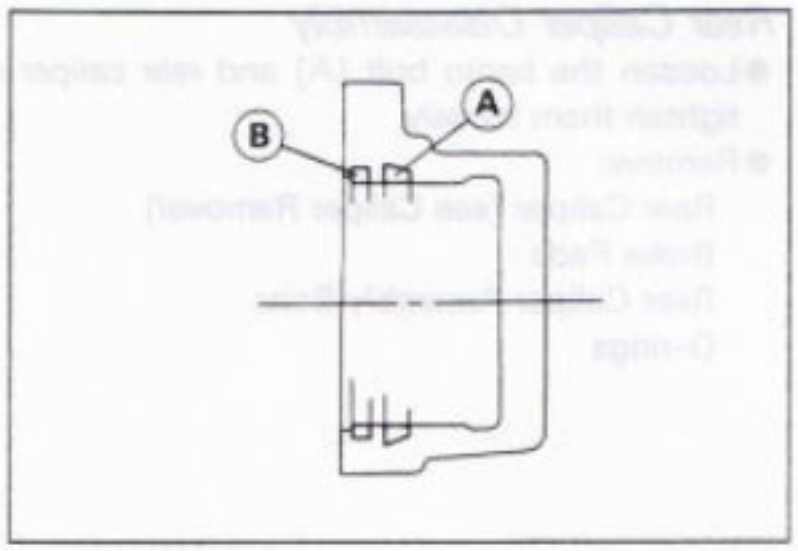

- Replace the O-rings [A] if they are damaged.
- Apply brake fluid to the outside of the pistons, and push them into each cylinder by hand.
- Be sure to install the O-rings.
- Tighten the caliper assembly bolts.

Torque – Front Caliper Assembly Bolts: 21 N-m (2.1 kg-m, 15.0 ft-lb)
Rear Caliper Assembly Bolts: 32 N-m (3.3 kg-m, 24 ft-lb)

- Install the pads (see Brake Pad Installation).
- Wipe up any spilled brake fluid on the caliper with wet cloth.

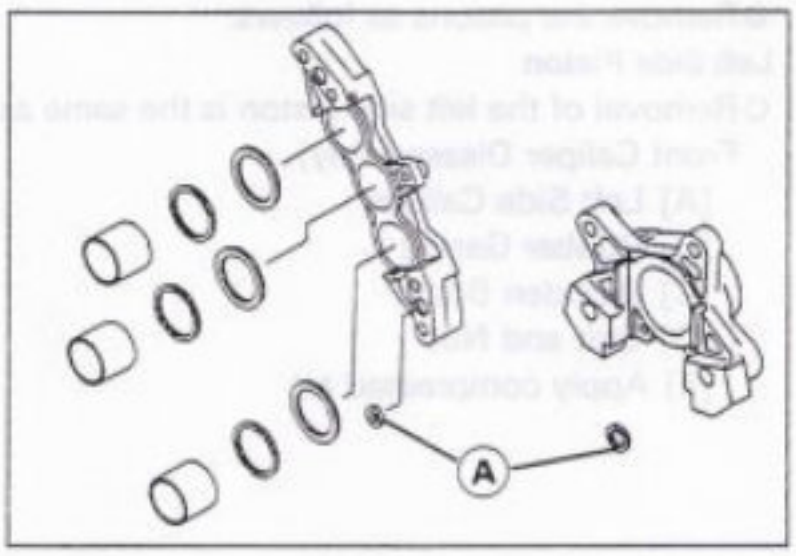

Brake Pads

Front Brake Pad Removal

- Remove:
  - Pad Spring Bolts [A]
  - Pad Spring [B]

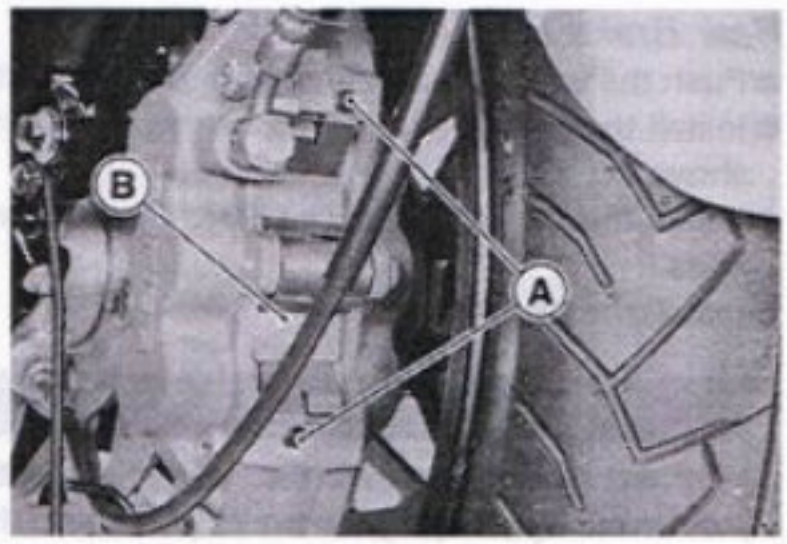

Clip [A]
Pad Pin [B]
Brake Pads [C]

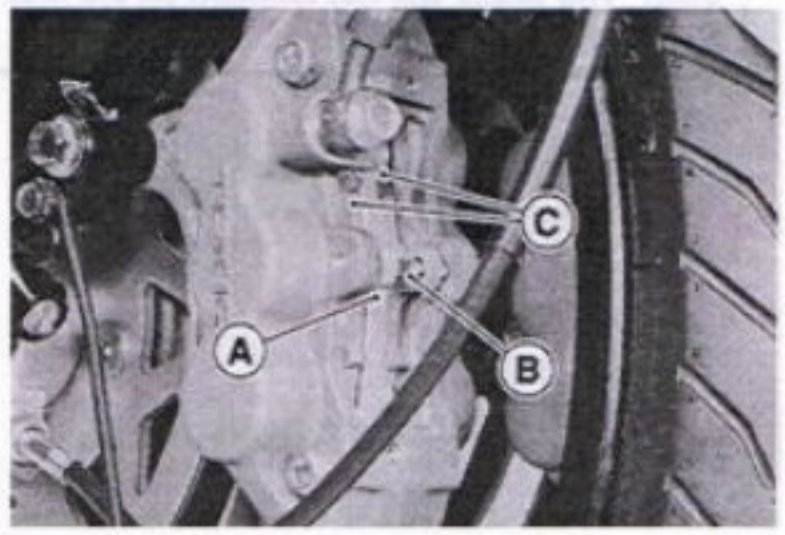

Front Brake Pad Installation

- Push the caliper pistons in by hand as far as they will go.
- Install the brake pads.
- Install the pad pin and clip. The clip must be "outside" of the pads.
- Install the pad spring and tighten the pad spring bolts.

Torque – Front Brake Pad Spring Bolts: 2.9 N-m (0.30 kg-m, 26 in-lb)

⚠WARNING

Do not attempt to drive the motorcycle until a full brake lever is obtained by pumping the brake lever until the pads are against the disc. The brake will not function on the first application of the lever if this is not done.

Rear Brake Pad Removal

- Unscrew the caliper mounting bolts.
- Detach the caliper from the disc.
- Remove the piston pad cover [A].
- Draw out the clip [B], and take off the pad pin [C].
- Remove the brake pads [D] and pad springs [E].

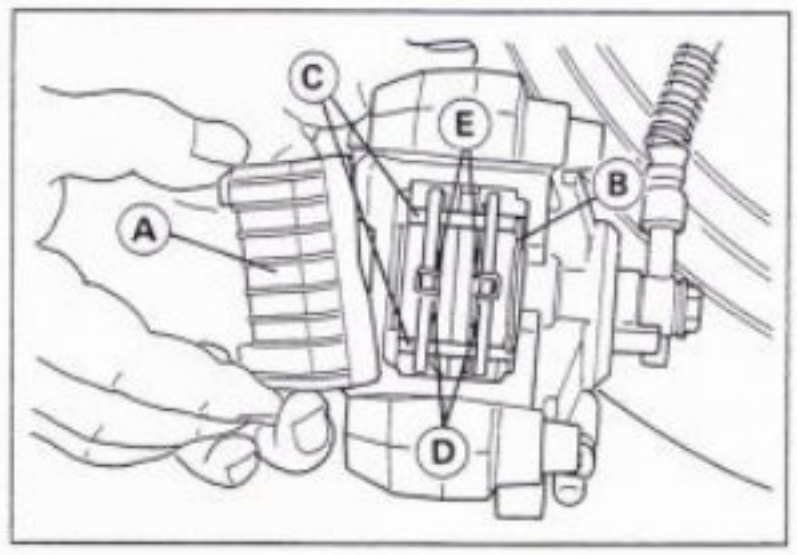

Rear Brake Pad Installation

- Push the caliper pistons in by hand as far as they will go.
- Install the brake pads and pad springs [A] on the original position as shown.
- Install the pad pins and clip [B]. The clip must be "outside" of the pads.
- Install the piston pad cover.

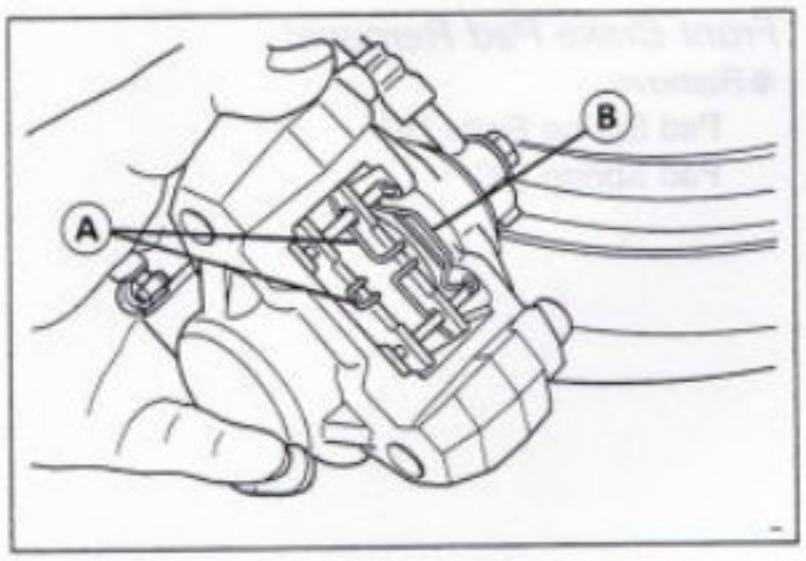

⚠WARNING

Do not attempt to drive the motorcycle until a full brake pedal is obtained by pumping the brake pedal until the pads are against the disc. The brake will not function on the first application of the pedal if this is not done.

Lining Wear

- Check the lining thickness [A] of the pads in each caliper.

★If the lining thickness of either pad is less than the service limit [B], replace both pads in the caliper as a set.

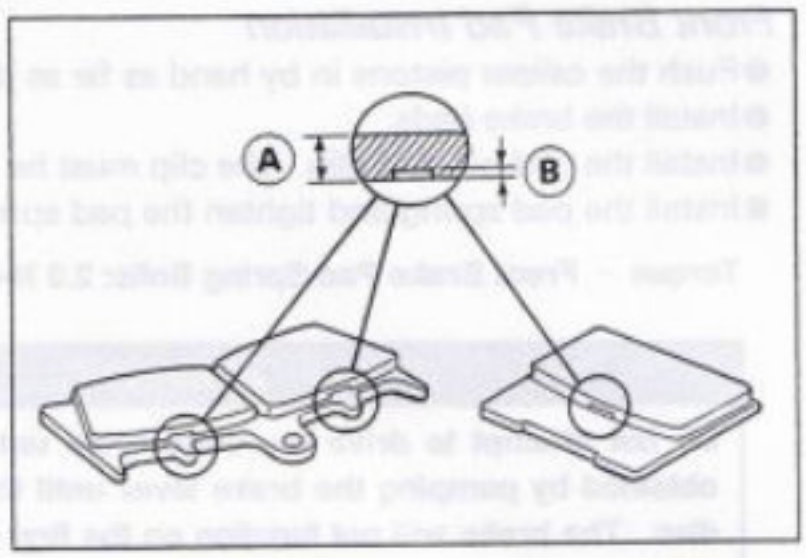

Pad Lining Thickness

Standard:	**Front**	**4 mm**
	Rear	**4 mm**
Service Limit		**1 mm**

Master Cylinder

Front Master Cylinder Removal

- Disconnect the front brake light switch connectors [A].
- Remove the banjo bolt [B] to disconnect the brake hose from the master cylinder (see Brake Hose Removal/Installation).
- Unscrew the clamp bolts, and take off the master cylinder [C] as an assembly with the reservoir, brake lever, and brake switch installed.

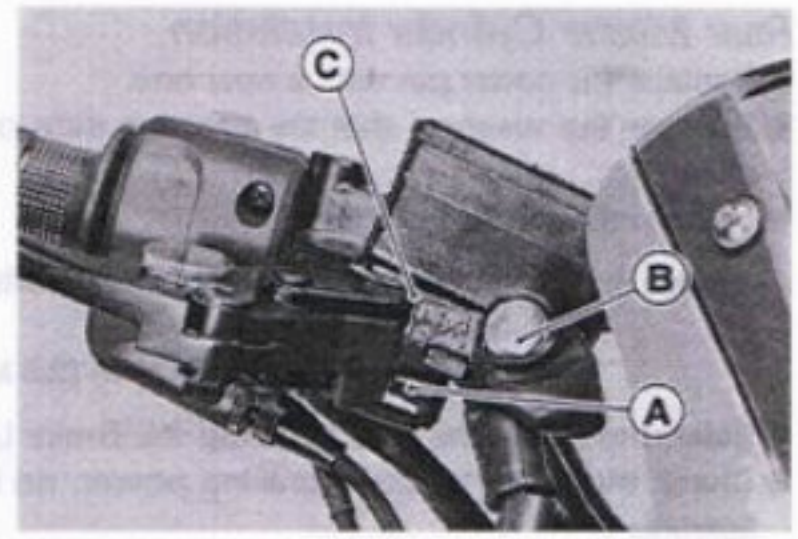

Front Master Cylinder Installation

- Align the punch mark [A] on the handlebar with the mating surface [B] of the master cylinder clamp.
- The master cylinder clamp must be installed with the arrow mark upward.
- Tighten the upper clamp bolt first, and then the lower clamp bolt. There will be a gap at the lower part of the clamp after tightening.

Torque – Front Master Cylinder Clamp Bolts: 8.8 N-m (0.90 kg-m, 78 in-lb)

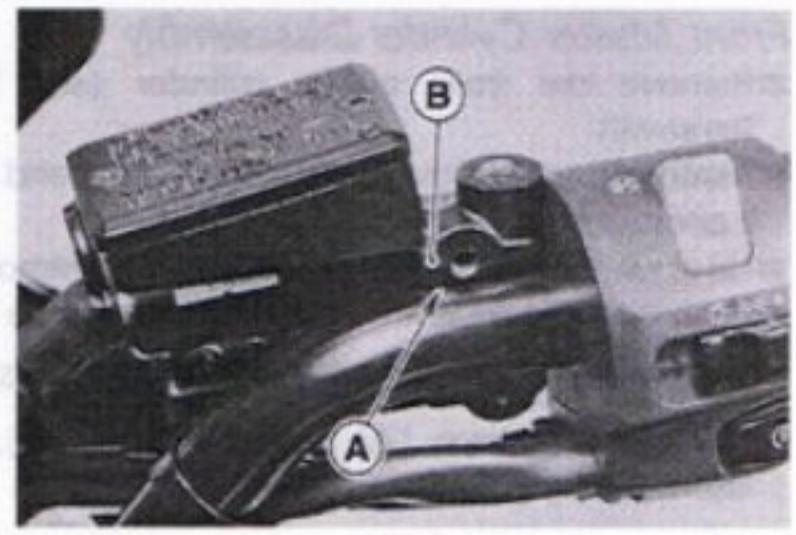

- Replace the washers that are on each side of the hose fitting with new ones.
- Tighten the brake hose banjo bolt.

Torque – Brake Hose Banjo Bolt: 25 N-m (2.5 kg-m, 18.0 ft-lb)

- Bleed the brake line (see Bleeding the Brake Line).
- Check the brake for good braking power, no brake drag, and no fluid leakage.

Rear Master Cylinder Removal

- Remove the bolts [A] and rear master cylinder cover [B].

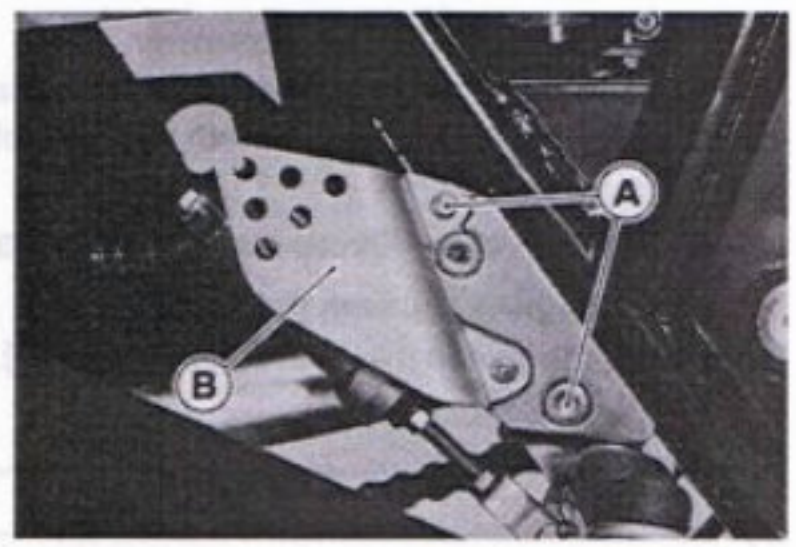

- Unscrew the brake hose banjo bolt [A] on the master cylinder (see Brake Hose Removal/Installation).
- Remove the cotter pin and joint pin [B].

NOTE

○ *Pull off the joint pin while pressing does the brake pedal.*

- Unscrew the master cylinder mounting bolts [C], and take off the master cylinder [D].
- Pull off the reservoir hose lower end, and drain the brake fluid into a container.

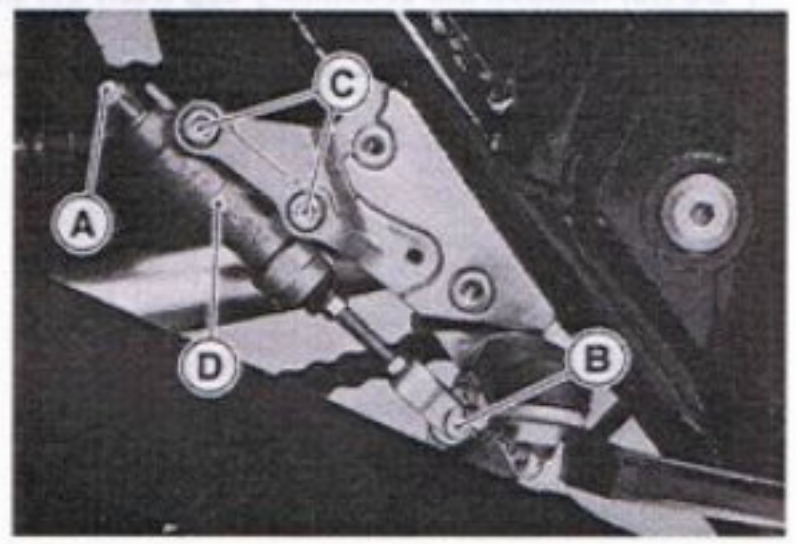

Rear Master Cylinder Installation

- Replace the cotter pin with a new one.
- Replace the washers that are on each side of hose fitting with new ones.
- Tighten the following bolts.

Torque – Rear Master Cylinder Mounting Bolts: 23 N-m (2.3 kg-m, 16.5 ft-lb)
Brake Hose Banjo Bolt: 25 N-m (2.5 kg-m, 18.0 ft-lb)

- Bleed the brake line (see Bleeding the Brake Line).
- Check the brake for good braking power, no brake drag, and no fluid leakage.

Front Master Cylinder Disassembly

- Remove the front master cylinder (see Front Master Cylinder Removal).
- Remove the reservoir cap and diaphragm, and pour the brake fluid into a container.
- Unscrew the locknut and pivot bolt, and remove the brake lever.
- Push the dust cover out of place, and remove the circlip.

Special Tool – Inside Circlip Pliers: 57001-143

- Pull out the piston [A], secondary cup [B], primary cup [C], and return spring [D].

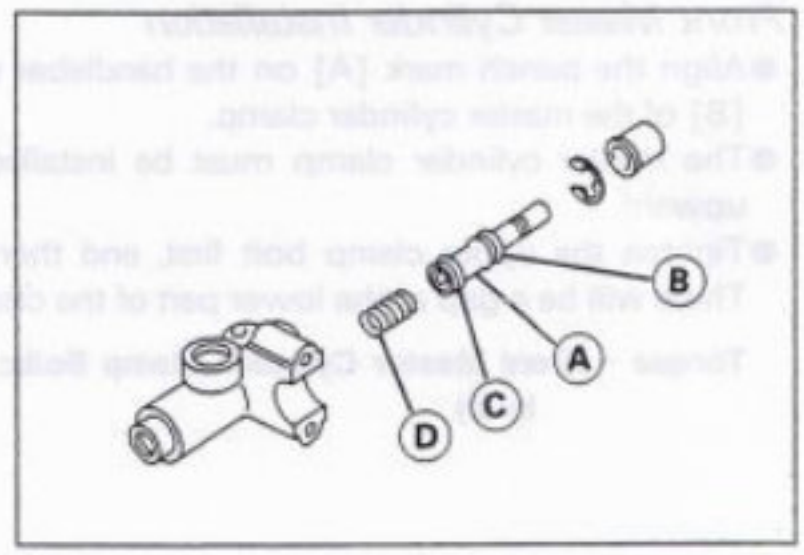

CAUTION
Do not remove the secondary cup from the piston since removal will damage it.

Rear Master Cylinder Disassembly

- Remove the rear master cylinder (see Rear Master Cylinder Removal).
- Slide the dust cover on the push rod out of place, and remove the circlip.

Special Tool – Inside Circlip Pliers: 57001-143

- Pull out the push rod with the piston stop.
- Take off the piston [A], secondary cup [B], primary cup [C], and return spring [D].

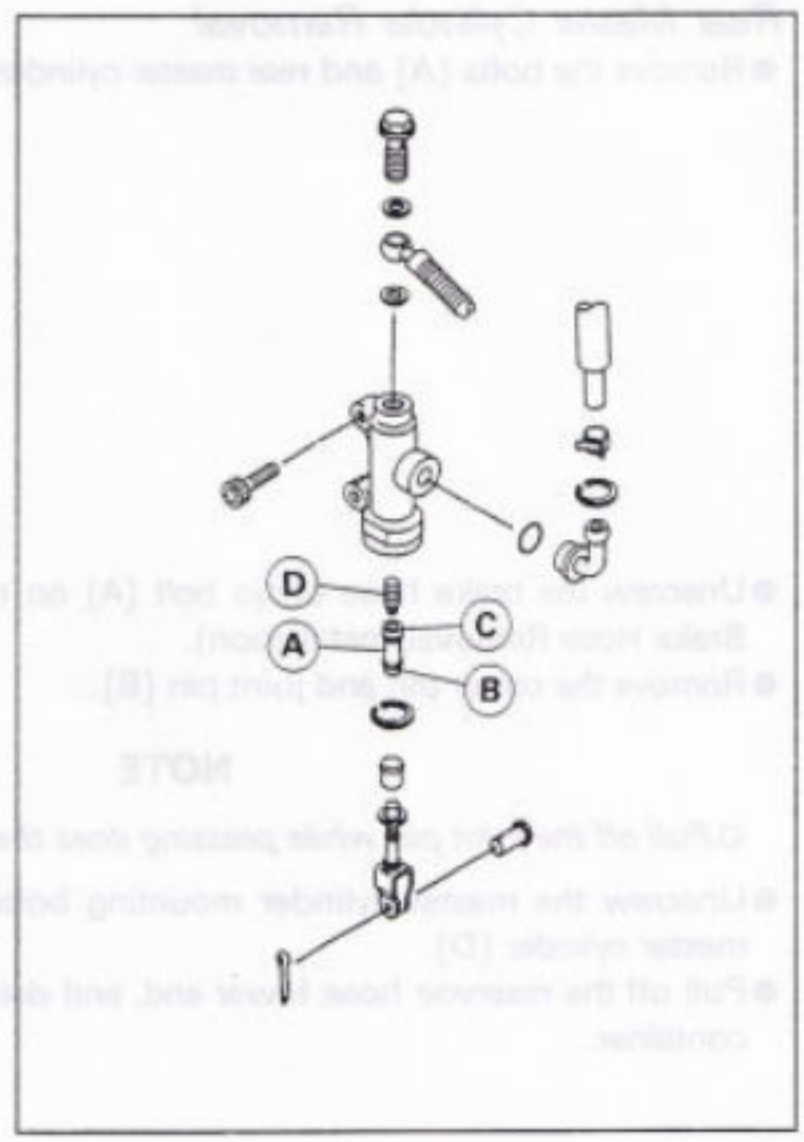

CAUTION
Do not remove the secondary cup from the piston since removal will damage it.

Master Cylinder Assembly

- Before assembly, clean all parts including the master cylinder with brake fluid or alcohol.

CAUTION
Except for the disc pads and disc, use only disc brake fluid, isopropyl alcohol, or ethyl alcohol for cleaning brake parts. Do not use any other fluid for cleaning these parts, Gasoline, engine oil, or any other petroleum distillate will cause deterioration of the rubber parts. Oil spilled on any part will be difficult to wash off completely, and will eventually deteriorate the rubber used in the disc brake.

- Apply brake fluid to the removed parts and to the inner wall of the cylinder.
- Take care not to scratch the piston or the inner wall of the cylinder.
- Tighten the brake lever pivot bolt and the locknut.

Torque – Brake Lever Pivot Bolt: 1.0 N-m (0.10 kg-m, 9 in-lb)
Brake Lever Pivot Bolt Locknut: 5.9 N-m (0.60 kg-m, 52 in-lb)

Master Cylinder Inspection (Visual Inspection)

- Disassemble the front and rear master cylinders.
- Check that there are no scratches, rust or pitting on the inner wall of each master cylinder [A] and on the outside of each piston [B].

★If a master cylinder or piston shows any damage, replace them.

- Inspect the primary [C] and secondary [D] cups.

★If a cup is worn, damaged softened (rotted), or swollen, the piston assembly should be replaced to renew the cups.

★If fluid leakage is noted at the brake lever, the piston assembly should be replaced to renew the cups.

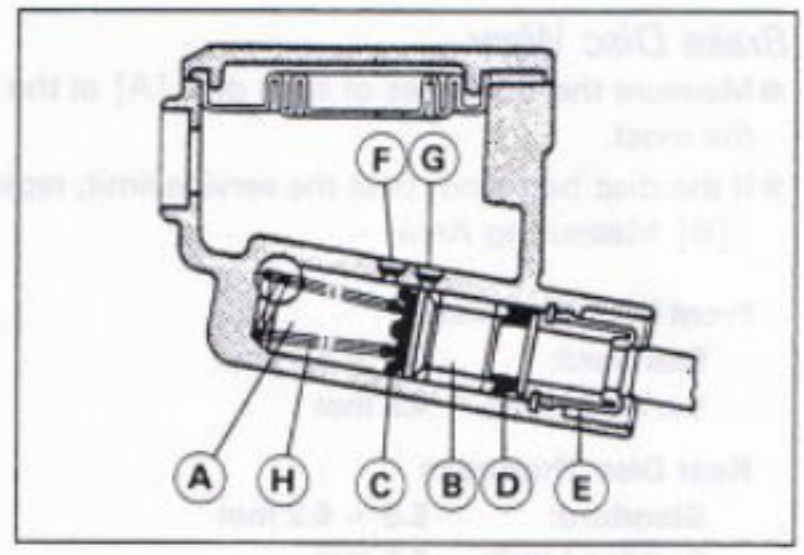

- Check the dust covers [E] for damage.

★If they are damaged, replace them.

- Check that relief [F] and supply [G] ports are not plugged.

★If the relief port becomes plugged, the brake pads will drag on the disc. Blow the ports clean with compressed air.

- Check the piston return springs [H] for any damage.

★If the springs are damaged, replace them.

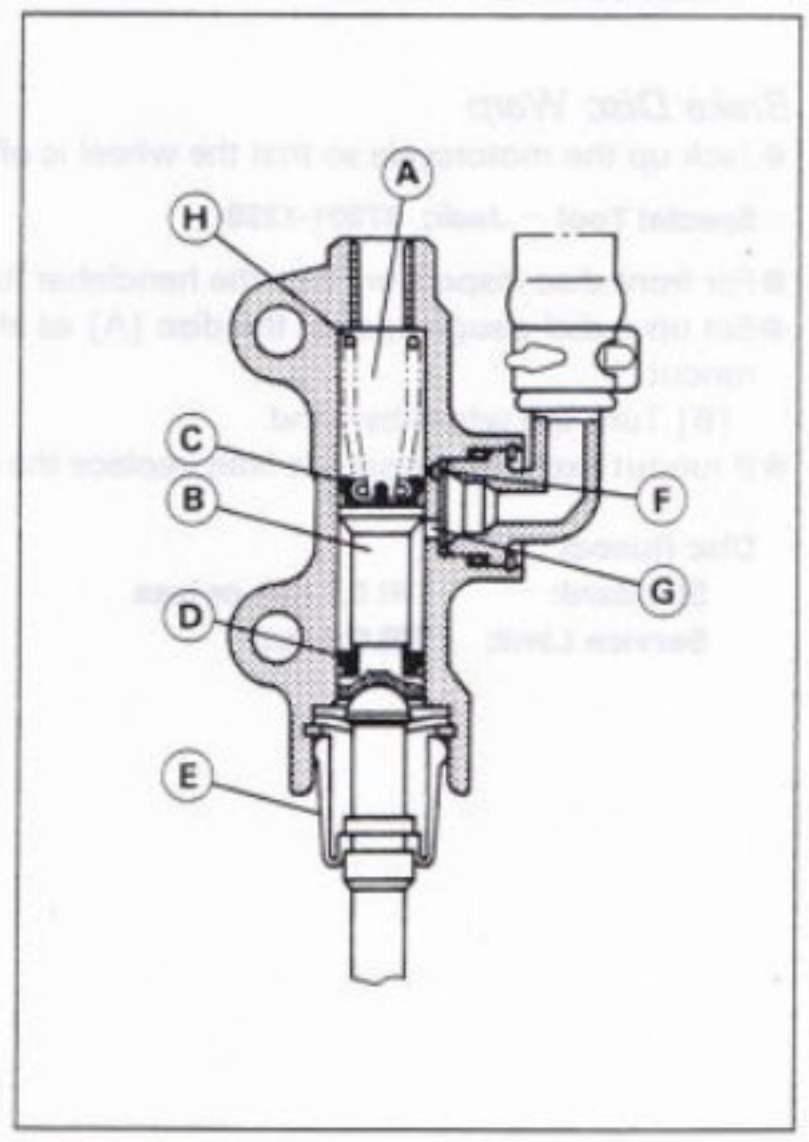

Brake Disc

Brake Disc Removal

- Remove the wheel (see Wheels/Tires chapter).
- Unscrew the mounting bolts, and take off the disc.

Brake Disc Installation

- Install the disc on the wheel so that the marked side [A] faces out.
- Apply a non-permanent locking agent to the threads at the mounting bolts [B], and tighten them.

Torque – Brake Disc Mounting bolts: 27 N-m (2.8 kg-m, 20 ft-lb)

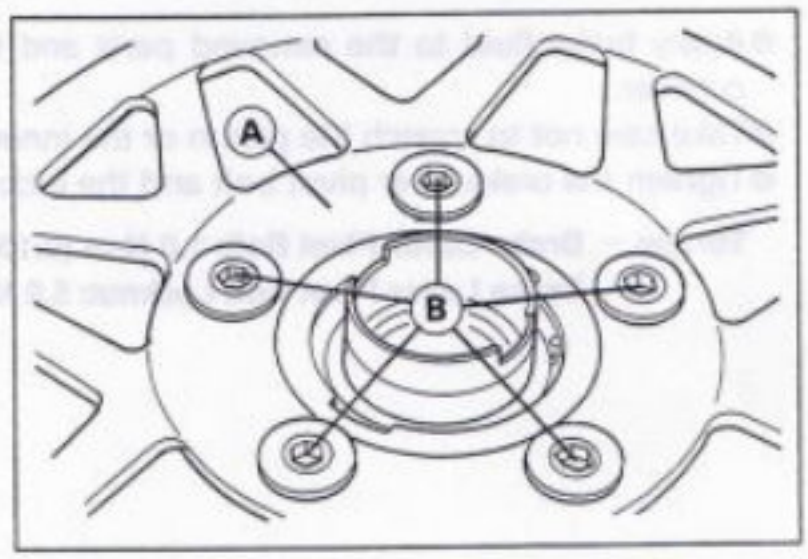

Brake Disc Wear

- Measure the thickness of each disc [A] at the point where it has worn the most.

★If the disc has worn past the service limit, replace it.

[B] Measuring Area

Front Disc Thickness

Standard:	**4.8 ~ 5.1 mm**
Service Limit:	**4.5 mm**

Rear Disc Thickness

Standard:	**5.8 ~ 6.2 mm**
Service Limit:	**5.5 mm**

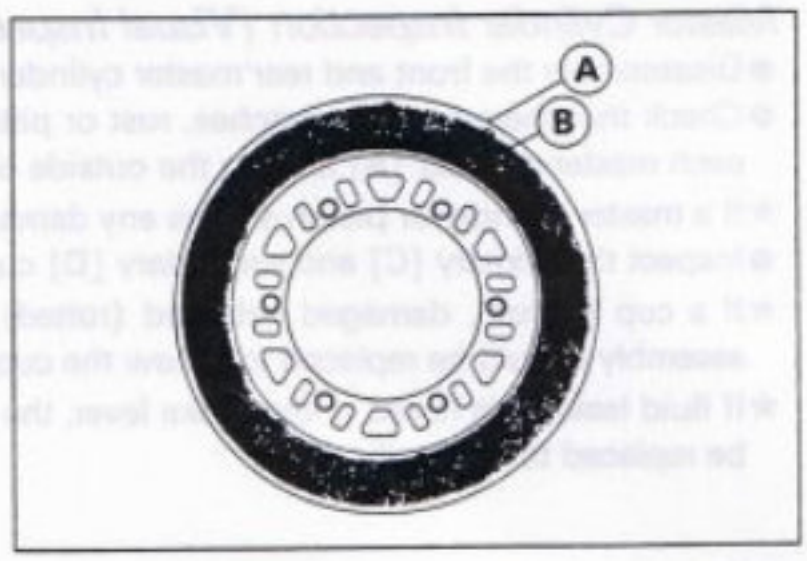

Brake Disc Warp

- Jack up the motorcycle so that the wheel is off the ground.

Special Tool – Jack: 57001-1238

- For front disc inspection, turn the handlebar fully to one side.
- Set up a dial gauge against the disc [A] as shown and measure disc runout.

[B] Turn the wheel by hand.

★If runout exceeds the service limit, replace the disc.

Disc Runout

Standard:	**TIR 0.2 mm or less**
Service Limit:	**TIR 0.3 mm**

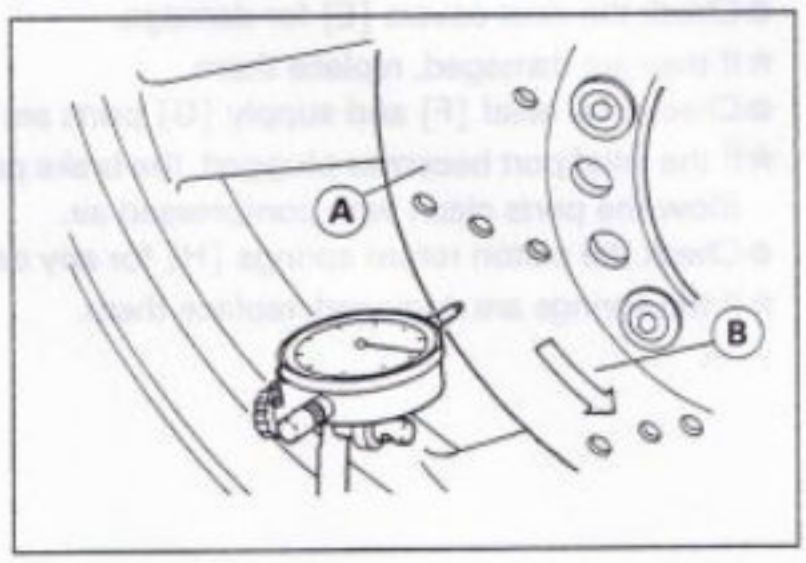

Brake Hose

Brake Hose Removal/Installation

CAUTION
Brake fluid quickly ruins painted or plastic surfaces; any spilled fluid should be completely wiped up immediately with wet cloth.

- When removing the brake hose, take care not to spill the brake fluid on the painted or plastic parts.
- When removing the brake hose, temporarily secure the end of the brake hose to some high place to keep fluid loss to a minimum.
- There are washers on each side of the brake hose fitting. Replace them with new ones when installing.
- When installing the hoses, avoid sharp bending, kinking, flattening or twisting, and route the hoses according to Hose Routing section in General Information chapter.
- Tighten the banjo bolts at the hose fittings.

Torque – Brake Hose Banjo Bolts: 25 N-m (2.5 kg-m, 18.0 ft-lb)

- Bleed the brake line after installing the brake hose (see Bleeding the Brake Line).

Brake Hose Inspection

- The high pressure inside the brake line can cause fluid to leak or the hose to burst if the line is not properly maintained. Bend and twist the rubber hose while examining it.

★Replace it if any cracks or bulges are noticed.

Suspension

Table of Contents

Exploded View 12-2
Specifications 12-4
Front Fork 12-5
Rebound Damping Force Adjustment 12-5
Compression Damping Force Adjustment 12-5
Spring Preload Adjustment 12-6
Front Fork Removal (each fork leg) 12-6
Front Fork Installation 12-7
Fork Oil Change 12-7
Front Fork Disassembly 12-9
Front Fork Assembly 12-10
Inner Tune, Outer Tube Inspection 12-12
Spring Tension 12-12
Rear Shock Absorber 12-13
Rebound Damping Force Adjustment 12-13
Compression Damping Force Adjustment 12-13
Spring Preload Adjustment 12-13
Rear Shock Absorber Removal 12-14
Rear Shock Absorber Installation 12-14
Rear Shock Absorber Scrapping 12-14
Swingarm 12-15
Swingarm Removal 12-15
Swingarm Installation 12-15
Bearing Removal 12-15
Bearing Installation 12-15
Lubrication 12-16

Exploded View

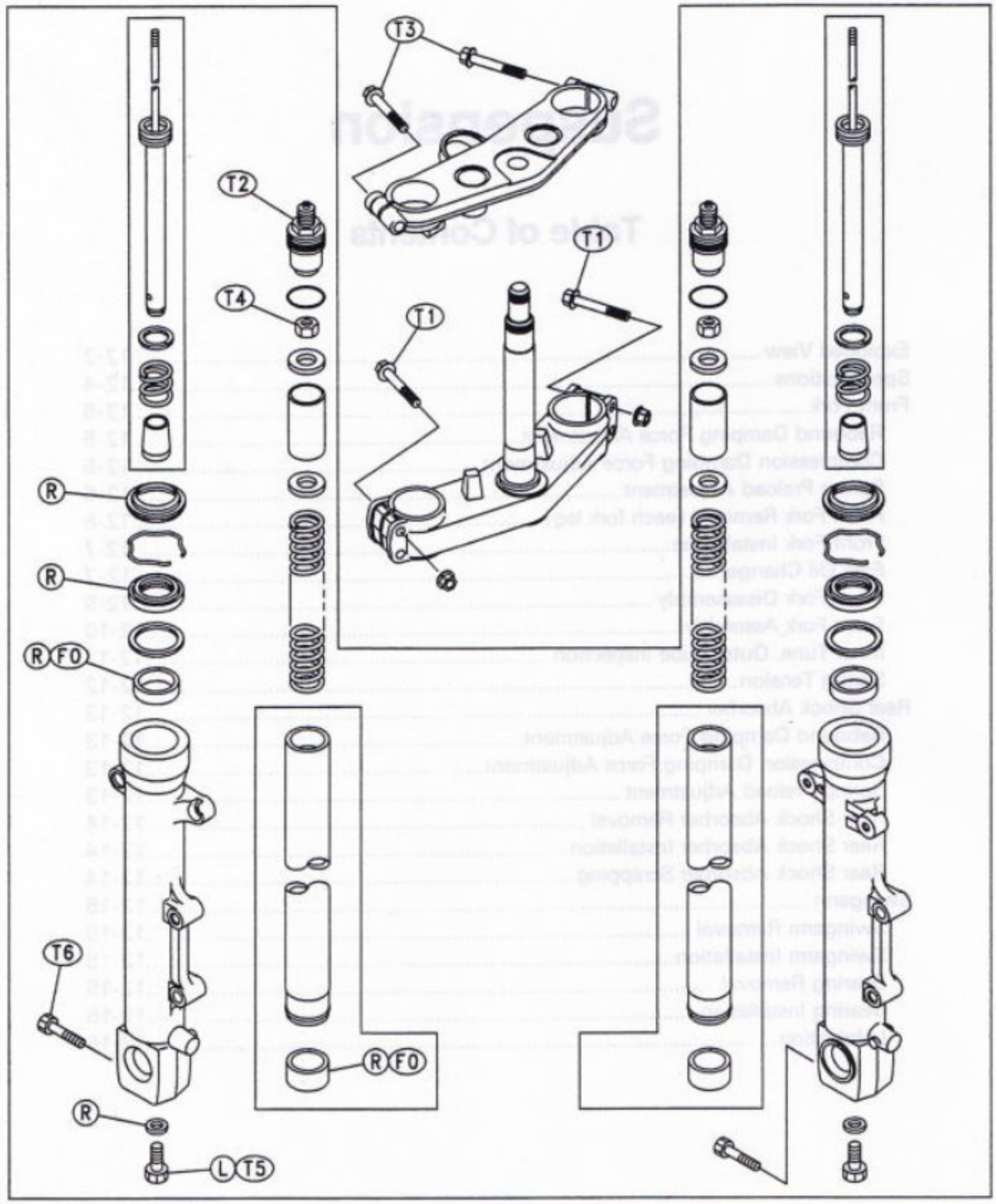

FO: Apply fork oil.
L: Apply a non-permanent locking agent.
R: Replacement Parts

T1: 21 N-m (2.1 kg-m, 15.0 ft-lb)
T2: 23 N-m (2.3 kg-m, 16.5 ft-lb)
T3: 29 N-m (3.0 kg-m, 22 ft-lb)
T4: 15 N-m (1.5 kg-m, 11.0 ft-lb)
T5: 39 N-m (4.0 kg-m, 29 ft-lb)
T6: 20 N-m (2.0 kg-m, 14.5 ft-lb)

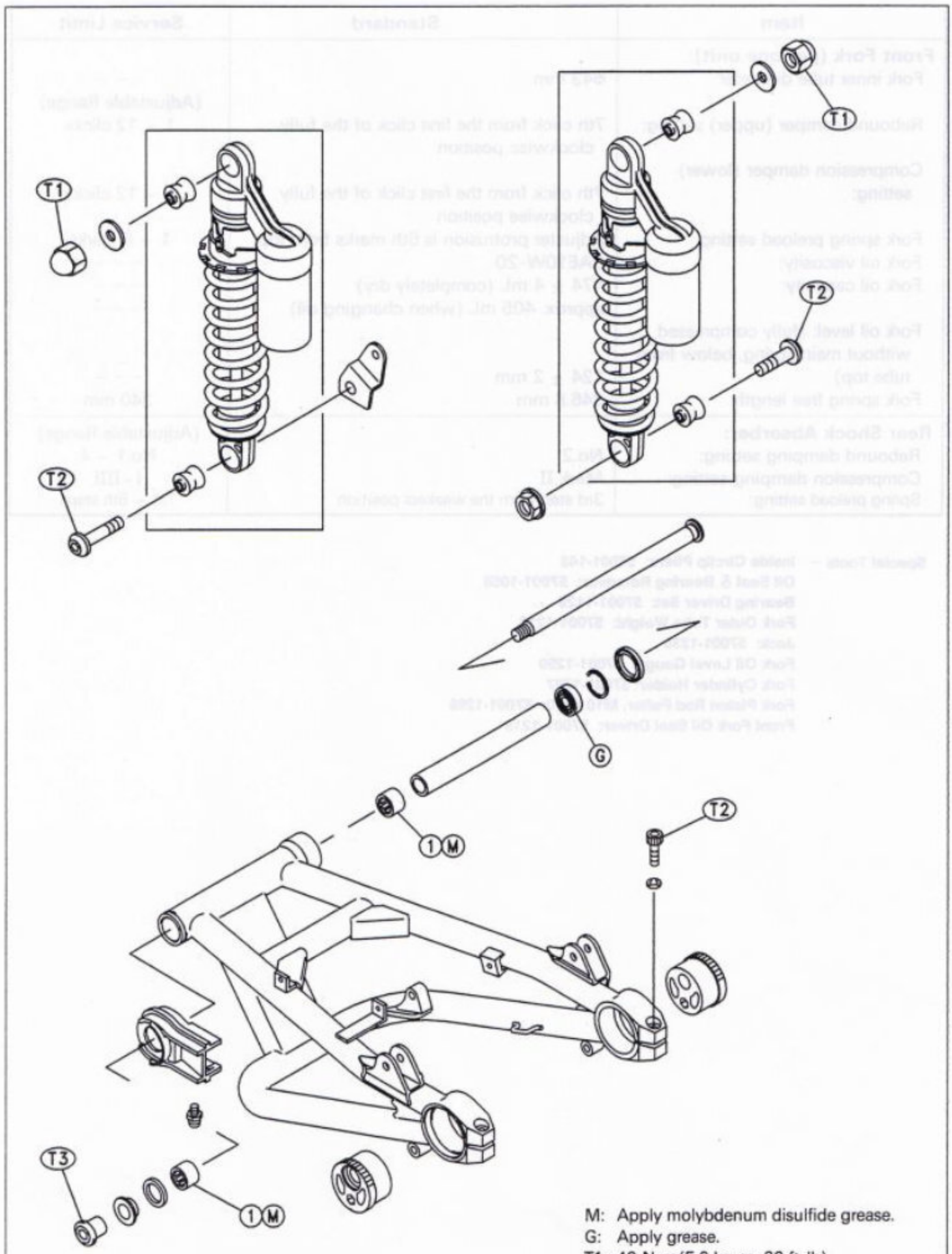

M: Apply molybdenum disulfide grease.
G: Apply grease.
T1: 49 N-m(5.0 kg-m, 36 ft-lb)
T2: 39 N-m (4.0 kg-m, 29 ft-lb)
T3: 98 N-m (10.0 kg-m, 72 ft-lb)

1. Needle Bearings: Face the manufacturer's marks out.

Specifications

Item	Standard	Service Limit
Front Fork (per one unit):		
Fork inner tube diameter:	Φ43 mm	– – –
Rebound damper (upper) setting:	7th click from the first click of the fully clockwise position	(Adjustable Range) 1 ~ 12 clicks
Compression damper (lower) setting:	7th click from the first click of the fully clockwise position	1 ~ 12 clicks
Fork spring preload setting:	Adjuster protrusion is 6th marks from top.	1 ~ 8 marks
Fork oil viscosity:	SAE10W-20	– – –
Fork oil capacity:	474 ± 4 mL (completely dry)	– – –
	approx. 405 mL (when changing oil)	– – –
Fork oil level: (fully compressed, without main spring, below from tube top)	124 ± 2 mm	– – –
Fork spring free length:	346.8 mm	340 mm
Rear Shock Absorber:		(Adjustable Range)
Rebound damping setting:	No.2	No.1 ~ 4
Compression damping setting:	Mark II	I~IIII
Spring preload setting:	3rd step from the weakest position	1st ~ 5th steps

Special Tools – **Inside Circlip Pliers: 57001-143**
Oil Seal & Bearing Remover: 57001-1058
Bearing Driver Set: 57001-1129
Fork Outer Tube Weight: 57001-1218
Jack: 57001-1238
Fork Oil Level Gauge: 57001-1290
Fork Cylinder Holder: 57001-1297
Fork Piston Rod Puller, M10 x 1.0: 57001-1298
Front Fork Oil Seal Driver: 57001-1219

Front Fork

Rebound Damping Force Adjustment

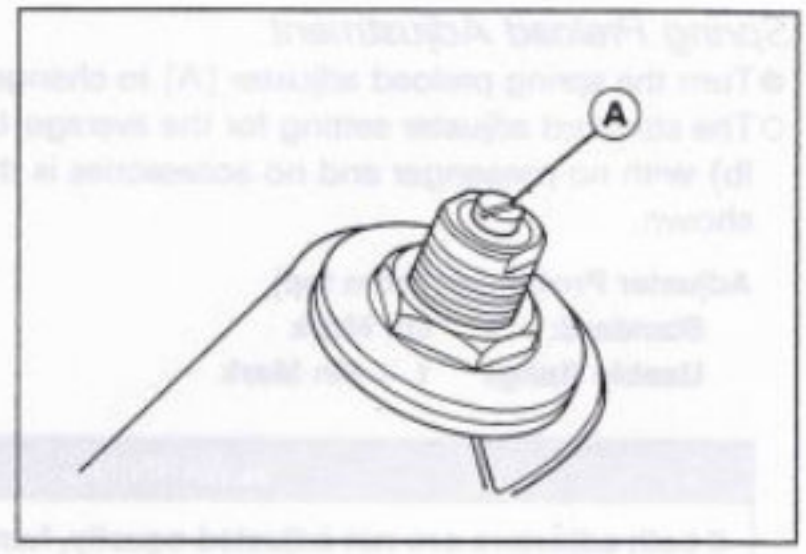

- ●To adjust the rebound damping force, turn the rebound damping adjuster [A] until you feel a click.
- ○The standard adjuster setting for the average-build rider of 68 kg (150 lb) with no passenger and no accessories is the **7th click** from the 1st click of the fully clockwise position.

⚠WARNING

If both adjusters are not adjusted equally, handling may be impaired and a hazardous condition may result.

- ○The damping force can be left soft for average riding. But it should be adjusted harder for high speed riding or riding with a passenger. If the damping feels too soft or too stiff, adjust it in accordance with the following table.

Rebound Damping Force Adjustment

Adjuster Position	Damping Force	Setting	Load	Road	Speed
12	Weak	Soft	Light	Good	Low
↑	↑	↑	↑	↑	↑
↓	↓	↓	↓	↓	↓
1	Strong	Hard	Heavy	Bad	High

Compression Damping Force Adjustment

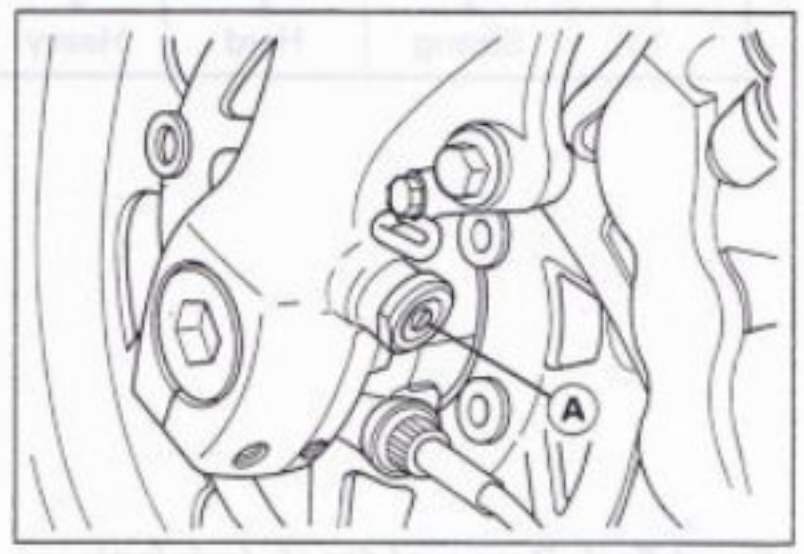

- ●To adjust the compression damping force, turn the compression damping adjuster [A] until you feel a click.
- ○The standard adjuster setting for the average-build rider of 68 kg (150 lb) with no passenger and no accessories is the **7th click,** from the 1st click of the fully clockwise position.

⚠WARNING

If both adjusters are not adjusted equally, handling may be impaired and a hazardous condition may result.

- ○The damping force can be left soft for average riding. But it should be adjusted harder for high speed riding or riding with a passenger. If the damping feels too soft or too stiff, adjust it in accordance with the following table.

Compression Damping Force Adjustment

Adjuster Position	Damping Force	Setting	Load	Road	Speed
12	Weak	Soft	Light	Good	Low
↑	↑	↑	↑	↑	↑
↓	↓	↓	↓	↓	↓
1	Strong	Hard	Heavy	Bad	High

Spring Preload Adjustment

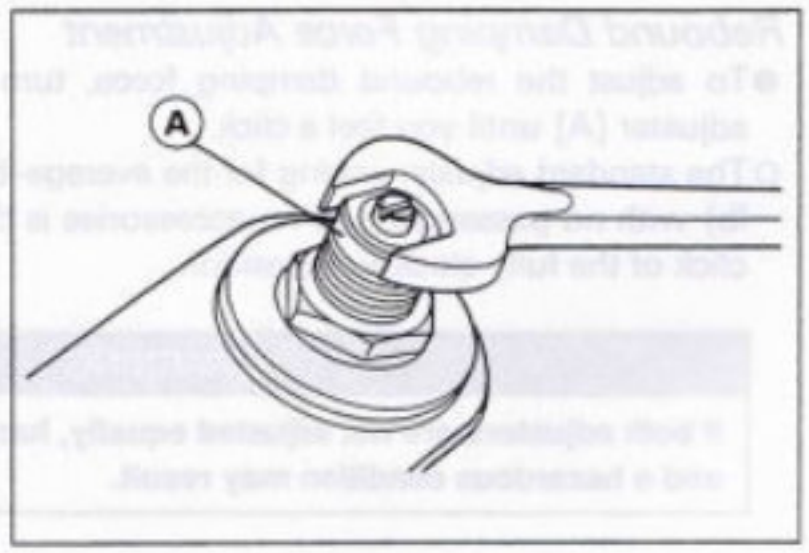

- ●Turn the spring preload adjuster [A] to change spring preload setting.
- ○The standard adjuster setting for the average-build rider of 68 kg (150 lb) with no passenger and no accessories is the 6th mark, from top as shown.

Adjuster Protrusion (from top)
Standard: 6th Mark
Usable Range 1 ~ 8th Mark

⚠WARNING

If both adjusters are not adjusted equally, handling may be impaired and a hazardous condition may result.

- ○The spring preload can be left soft for average riding. But it should be adjusted harder for high speed riding or riding with a passenger. If the spring action feels too soft or too stiff, adjust it in accordance with the following table.

Spring Action

Adjuster Position	Dumping Force	Setting	Load	Road	Speed
8	Weak	Soft	Light	Good	Low
↑	↑	↑	↑	↑	↑
↓	↓	↓	↓	↓	↓
1	Strong	Hard	Heavy	Bad	High

Front Fork Removal (each fork leg)

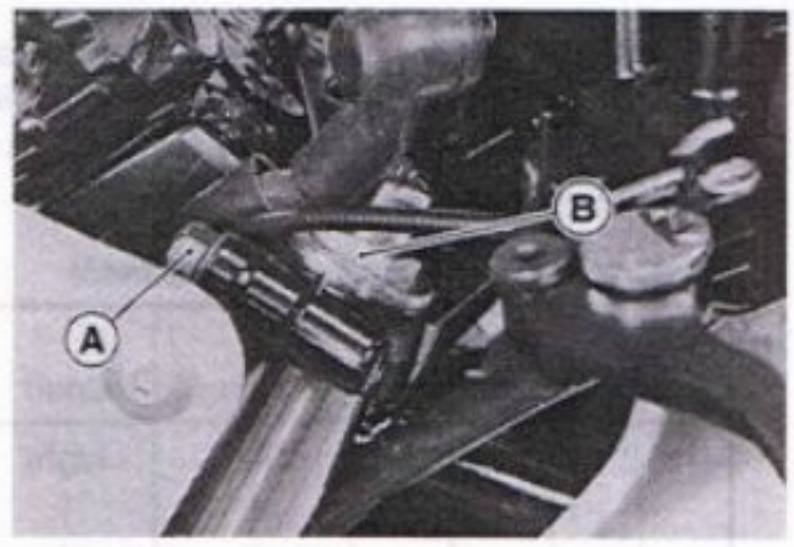

- ●Remove:
  Front Wheel (see Wheels/Tires chapter)
  Front Fender (see Frame chapter)
- ★Loosen the upper fork clamp bolt [A], and fork top plug [B] beforehand if the fork leg is to be disassembled.

NOTE

○*Loosen the top plug after loosening the upper fork clamp bolt.*

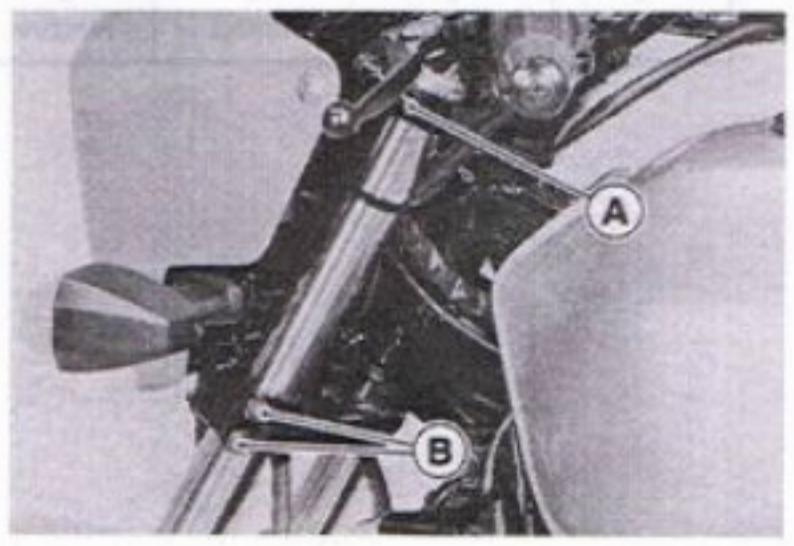

- ●Loosen the upper fork clamp bolt [A], and lower fork clamp bolts [B].
- ●With a twisting motion, work the fork leg down and out.

Front Fork Installation

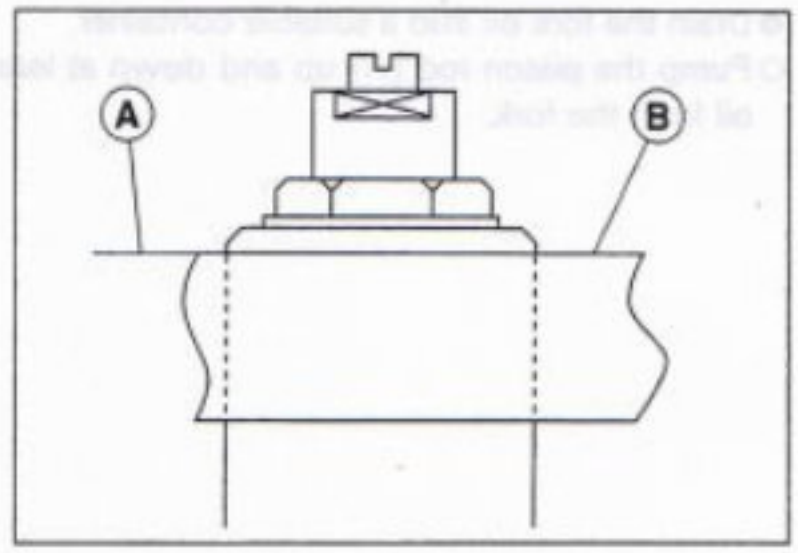

- Install the fork so that the top end [A] of the inner tube is flush with the upper surface [B] of the steering stem head.
- Tighten the lower fork clamp bolt and fork top plug.

Torque – Lower Front Fork Clamp Bolt: 21 N-m (2.1 kg-m, 15.0 ft-lb)
Front Fork Top Plug: 23 N-m (2.3 kg-m, 16.5 ft-lb)

- Tighten the upper fork clamp bolt.

Torque – Upper Front Fork Clamp Bolt: 29 N-m (3.0 kg-m, 22 ft-lb)

NOTE

○ *Tighten the top plug before tightening the handlebar holder bolt and upper fork clamp bolt.*

- Install the removed parts (see appropriate chapters).
- Adjust the spring preload and the damping force.

Fork Oil Change

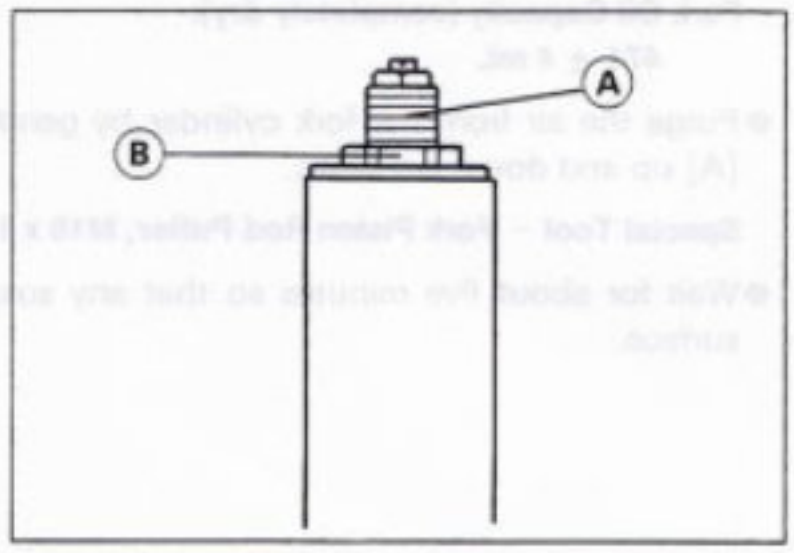

- Remove the front fork (see Front Fork Removal).
- Hold the outer tube lower end in a vise.
- Turn the spring preload adjuster [A] counterclockwise until the fully position.
- Remove the top plug [B] from the inner tube.

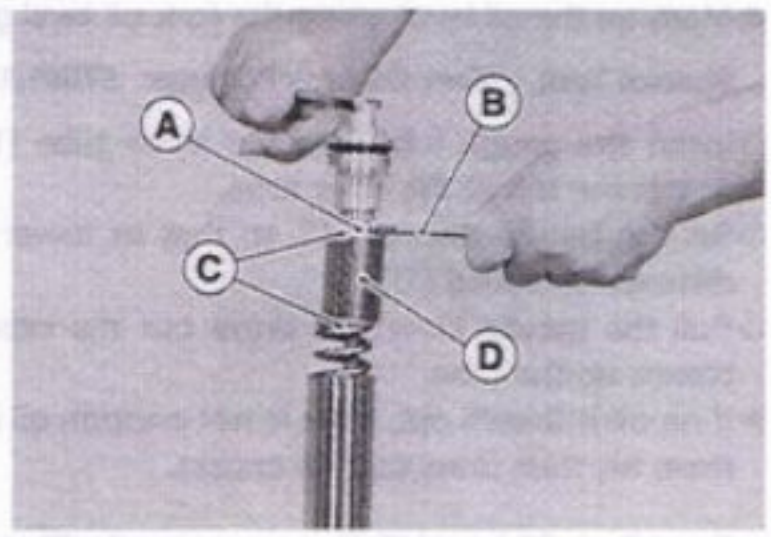

- Holding the piston rod nut [A] with a wrench [B], remove the top plug from the piston rod.
- Remove:
  Washers [C]
  Spacer [D]

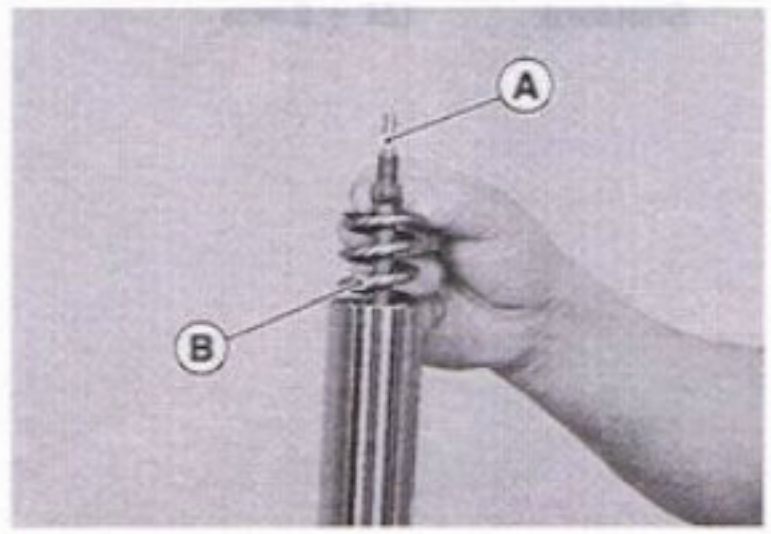

- Remove:
  Rebound Damping Adjuster Rod [A]
  Fork Spring [B]

● Drain the fork oil into a suitable container.
○ Pump the piston rod [A] up and down at least ten times to expel the oil from the fork.

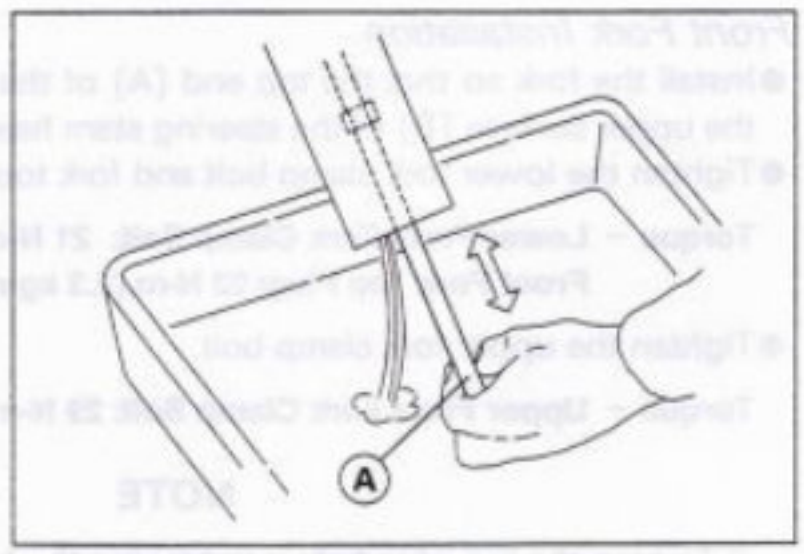

● Hold the fork tube upright, press the inner tube and the piston rod all the way down.

NOTE

○ *The spring should not be installed.*

● Fill the front fork with the specified oil.

Recommended Oil:
SAE10W-20

Fork Oil Capacity (when changing oil):
Approx. 405 mL

Fork Oil Capacity (completely dry):
474 ± 4 mL

● Purge the air from the fork cylinder by gently moving the rod puller [A] up and down ten times.

Special Tool – Fork Piston Rod Puller, M10 x 1.0: 57001-1298

● Wait for about five minutes so that any suspended air bubbles can surface.

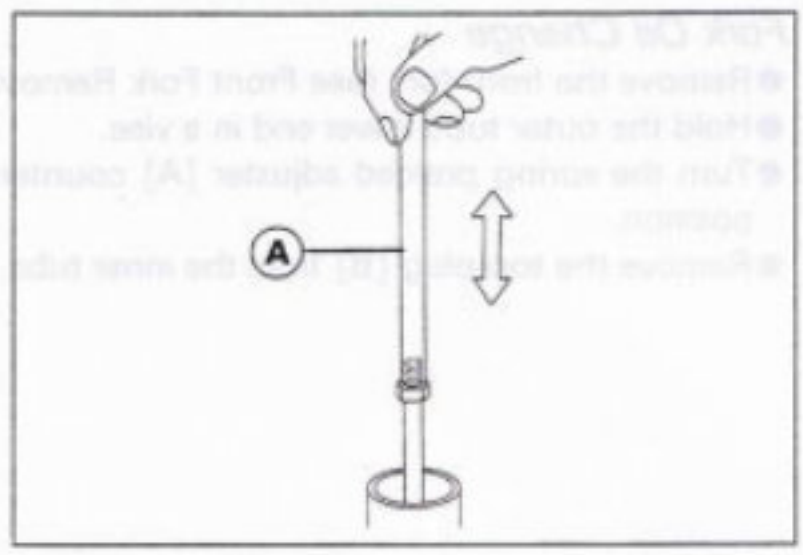

● Measure the oil level, using the fork oil level gauge [A].

Special Tool – Fork Oil Level Gauge: 57001-1290

○ Insert the gauge tube into the inner tube [B] and position stopper across the top of the inner tube.
○ Set the gauge stopper [C] so that its lower side shows the oil level distance specified [D].
○ Pull the handle slowly to draw out the excess oil until no more oil comes up the tube.
★ If no oil is drawn out, there is not enough oil in the fork. Pour in some more oil, then draw out the excess.

Front Fork Oil Level (Fully compressed without fork spring)
Standard: 124 ± 2 mm

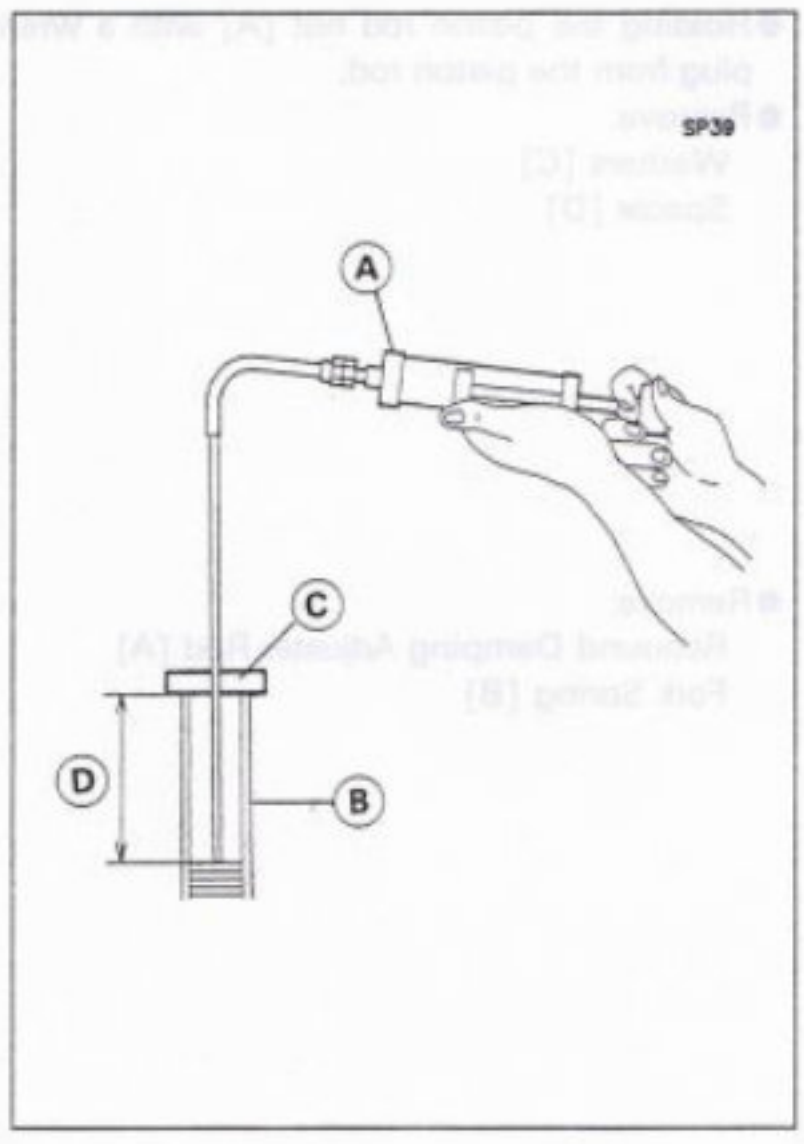

- Pull the piston rod [A] up above the inner tube top.
- Screw the rod nut [B] on to the piston rod with the chamfered side [C] down.
  - Check that the visible thread length is at least 11 mm [D].

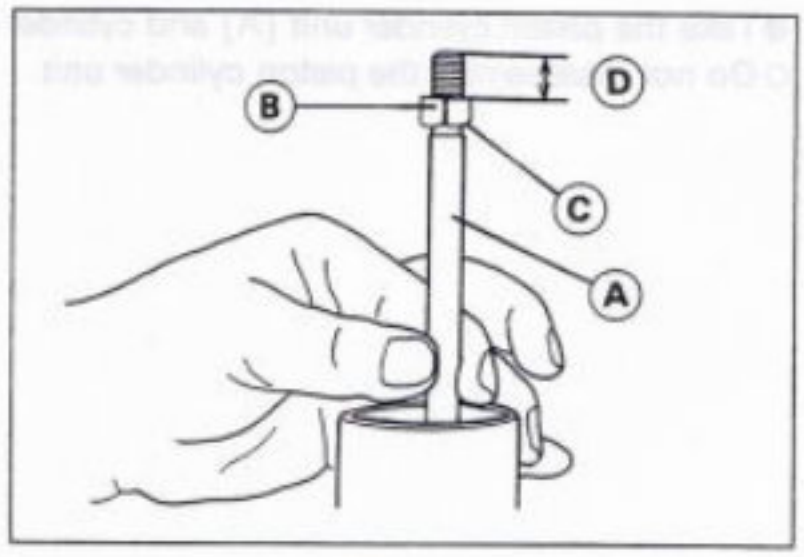

- Insert the rebound damping adjuster rod into the piston rod.
- Screw the fork piston rod puller onto the end of the rod.

Special Tool – Fork Piston Rod Puller, M10 x 1.0: 57001-1298

- Install:
  Fork Spring
  Spacer and Washers

- Check the O-ring [A] on the top plug and replace it with a new one if damaged.
- Screw in the damper adjuster [B] of the top plug so that the distance between the adjuster bottom and the spring adjuster [C] end is 25 mm [D].

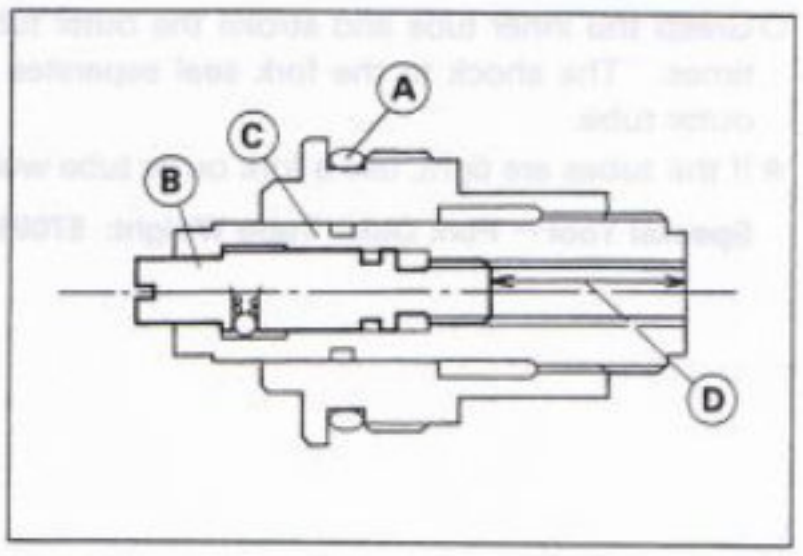

- Holding the top plug [A] with a wrench, tighten the piston rod nut [B] against the top plug.

Torque – Piston Rod Nut: 15 N-m (1.5 kg-m, 11.0 ft-lb)

- Raise the inner tube and screw the top plug into it.
- Install the front fork (see Front Fork Installation).

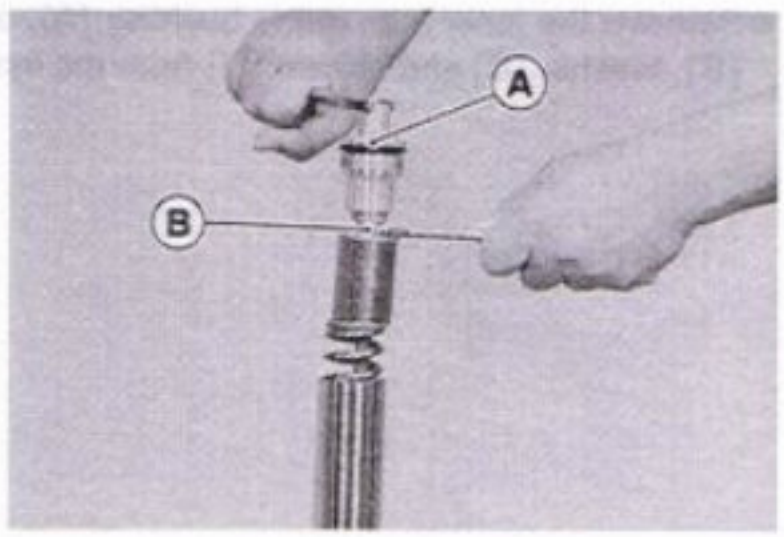

Front Fork Disassembly

- Remove the front fork (see Front Fork Removal).
- Drain the fork oil (see Fork Oil Change).
- Hold the front fork in a vise [A].
- Stop the cylinder [B] from turning by using the fork cylinder holder [C].

Special Tool – Fork Cylinder Holder: 57001-1297

- Unscrew the Allen bolt [D], then remove the bolt and gasket out of the bottom of the outer tube.

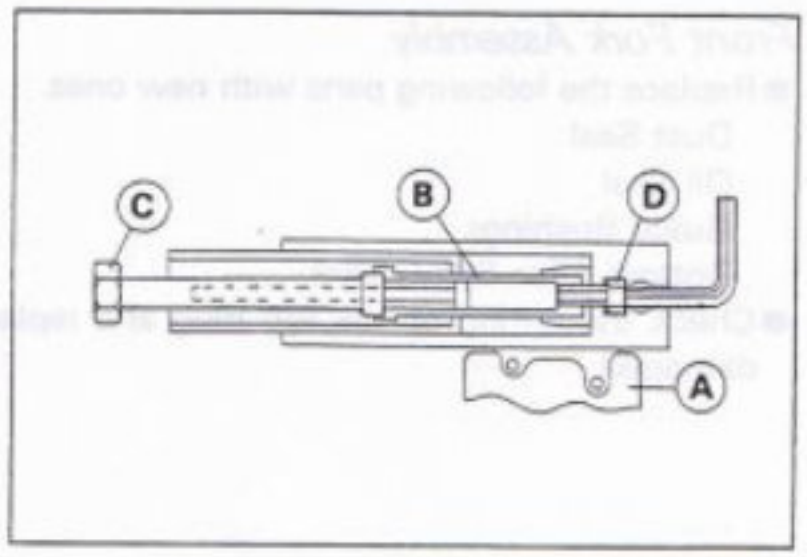

●Take the piston cylinder unit [A] and cylinder base [B].
○Do not disassemble the piston cylinder unit.

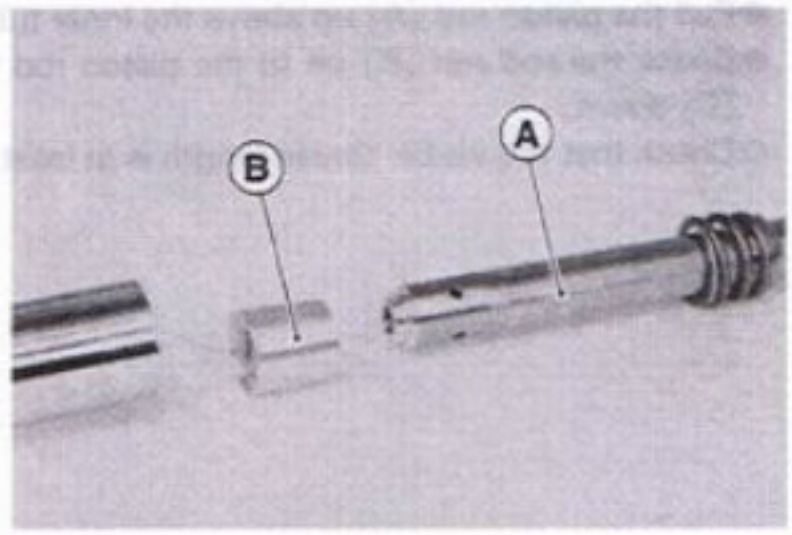

●Separate the inner tube from the outer tube as follows.
○Remove:
Dust Seal [A]
Retaining Ring [B]

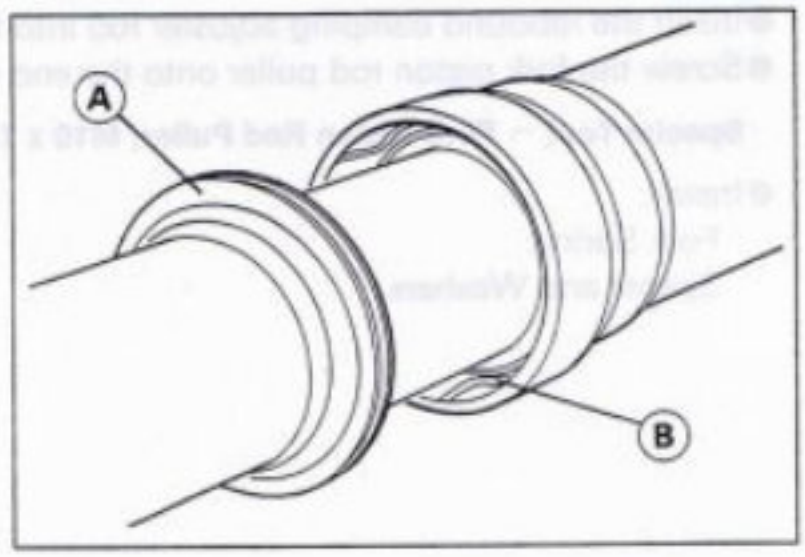

○Grasp the inner tube and stroke the outer tube up and down several times. The shock to the fork seal separates the inner tube from the outer tube.
★If the tubes are tight, use a fork outer tube weight [A].

Special Tool – Fork Outer Tube Weight: 57001-1218

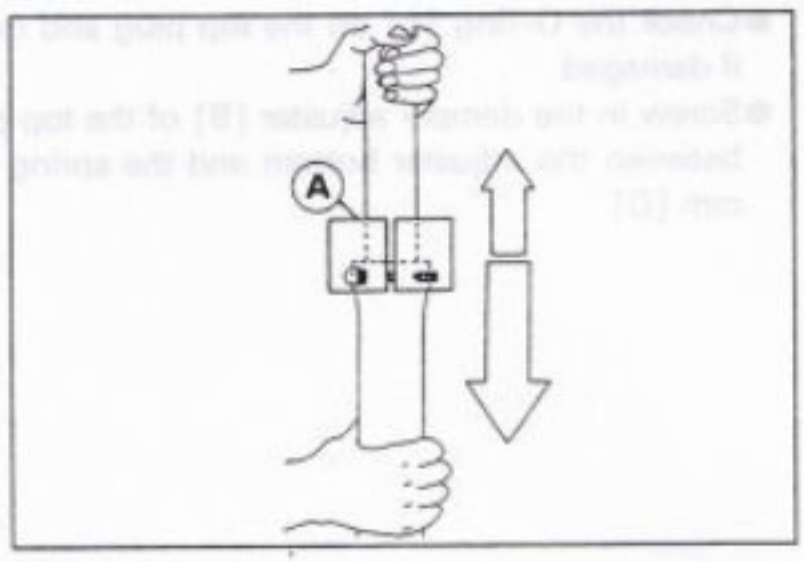

●Remove the inner tube guide bushing [A], outer tube guide bushing [B], washer [C] and oil seal [D] from the inner tube.

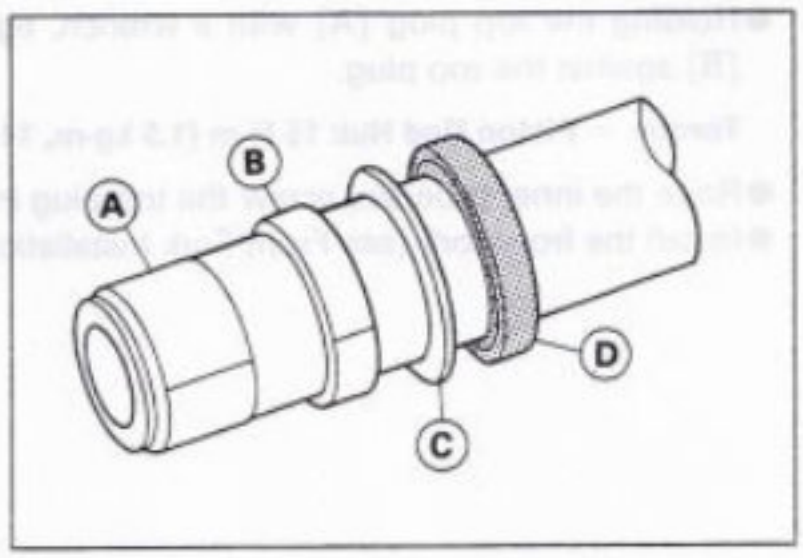

Front Fork Assembly

●Replace the following parts with new ones.
Dust Seal
Oil Seal
Guide Bushings
Bottom Allen Bolt Gasket
●Check the O-ring on the top plug and replace it with a new one if damaged.

- Install the following parts onto the inner tube.
  Outer Tube Guide Bushing
  Inner Tube Guide Bushing

- Fit the new outer guide bush [A] into the outer tube.

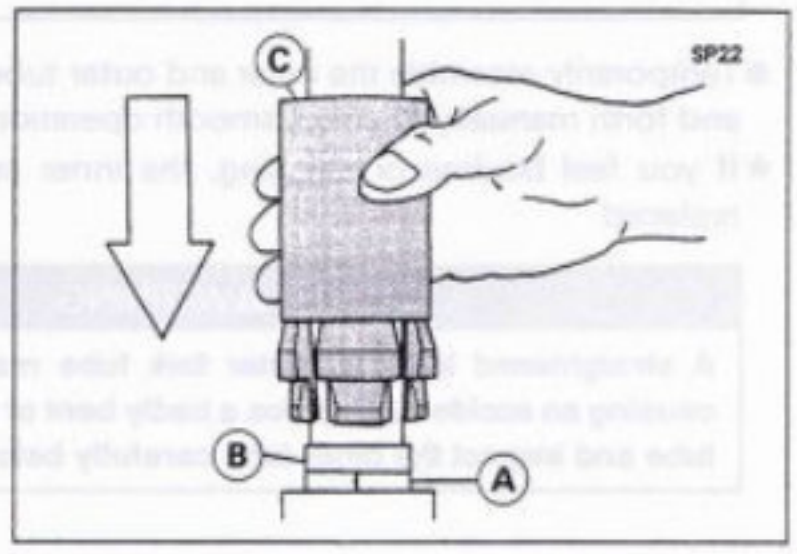

NOTE

○ *Hold the used guide bush [B] against the new one, and tap the used guide bush.*

Special Tool – Front Fork Oil Seal Driver: 57001-1219 [C]

○ Remove the used guide bush.

- After installing the washer, install the new oil seal [A].
○ Apply high temperature grease to the oil seal lips.

Special Tool – Front Fork Oil Seal Driver: 57001-1219 [B]

- Install the retaining ring and dust seal by hand.

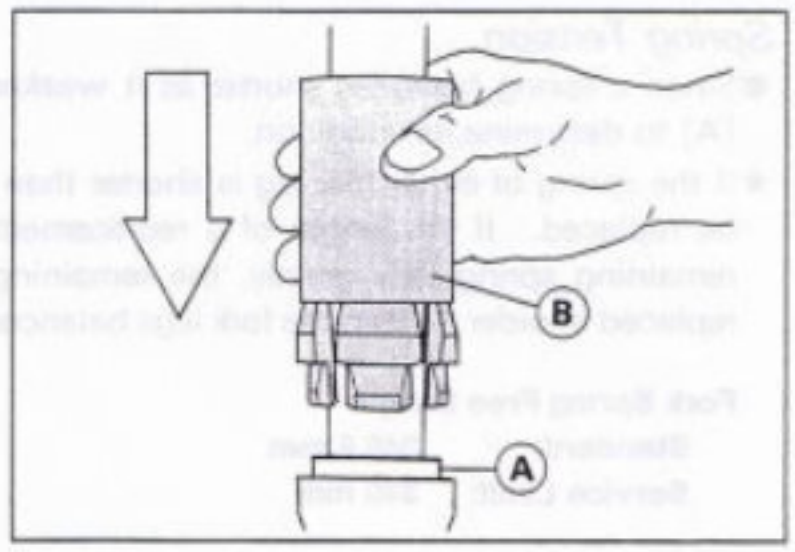

- Install the piston cylinder unit [A] and cylinder base [B] in the inner tube.

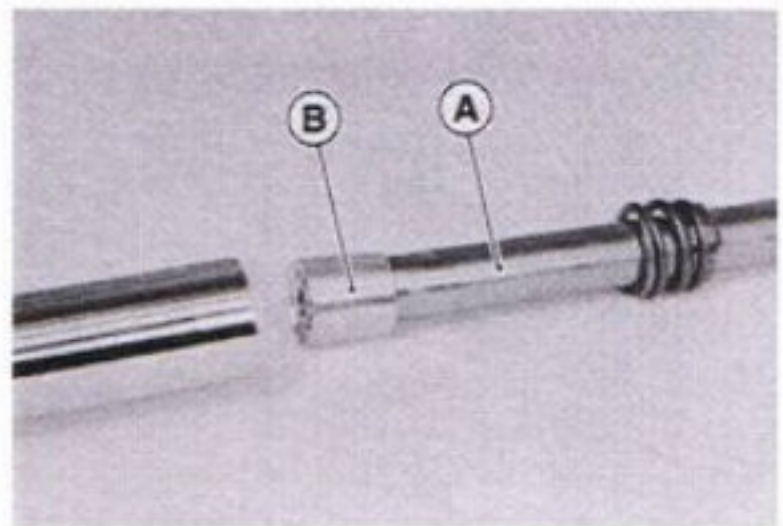

- Stop the cylinder from turning by using the fork cylinder holder.

Special Tool – Fork Cylinder Holder: 57001-1297

- Apply a non-permanent locking agent to the threads of the Allen bolt and tighten it.

Torque – Front Fork Bottom Allen Bolt: 39 N-m (4.0 kg-m, 29 ft-lb)

- Pour in the specified type of oil (see Fork Oil Change).

Inner Tube, Outer Tube Inspection

- Visually inspect the inner tube and repair any damage.
- Nick or rust damage can sometimes be repaired by using a wet-stone to remove sharp edges or raised areas which cause seal damage.

★If the damage is not repairable, replace the inner tube. Since damage to the inner tube damages the oil seal, replace the oil seal whenever the inner tune is repaired or replaced.

CAUTION

If the inner tube is badly bent or creased, replace it. Excessive bending, followed by subsequent straightening, can weaken the inner tube.

- Temporarily assemble the inner and outer tubes, and pump them back and forth manually to check smooth operation.

★If you feel binding or catching, the inner and outer tubes must be replaced.

⚠WARNING

A straightened inner or outer fork tube may fall in use, possibly causing an accident. Replace a badly bent or damaged inner or outer tube and inspect the other tube carefully before reusing it.

Spring Tension

- Since a spring becomes shorter as it weakens, check its free length [A] to determine its condition.

★If the spring of either fork leg is shorter than the service limit, it must be replaced. If the length of a replacement spring and that of the remaining spring vary greatly, the remaining spring should also be replaced in order to keep the fork legs balanced for motorcycle stability.

Fork Spring Free Length

Standard:	**346.8 mm**
Service Limit:	**340 mm**

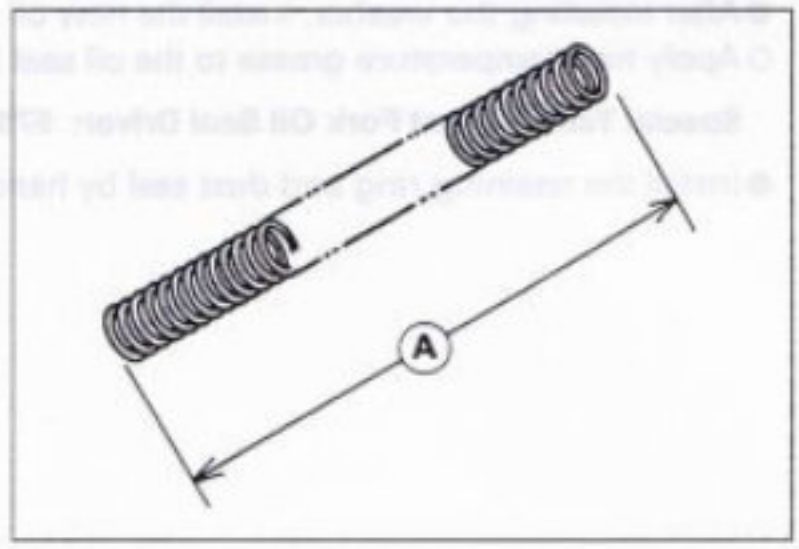

Rear Shock Absorber

Rebound Damping Force Adjustment

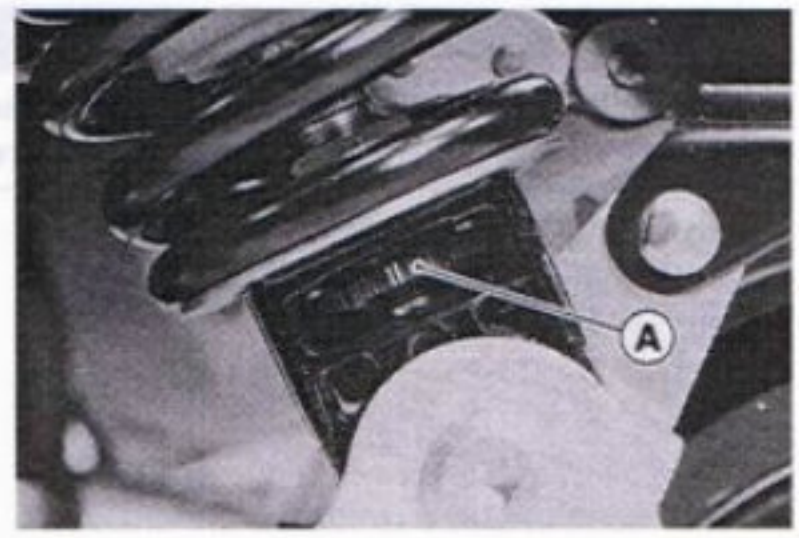

- ●To adjust the rebound damping force, turn the lower damping adjuster [A] to the desired position until you feel a click.
- ○The standard adjuster setting for an average-build rider of 68 kg (150 lb) with no passenger and no accessories is mark II.

Rebound Damping Adjustment

Adjuster Position	Damping Force	Setting	Load	Road	Speed
I	Weak	Soft	Light	Good	Low
II	↑	↑	↑	↑	↑
III	↓	↓	↓	↓	↓
IIII	Strong	Hard	Heavy	Bad	High

⚠WARNING

If a pair of lower adjusters are not adjusted equally, handling may be impaired and a hazardous condition may result.

Compression Damping Force Adjustment

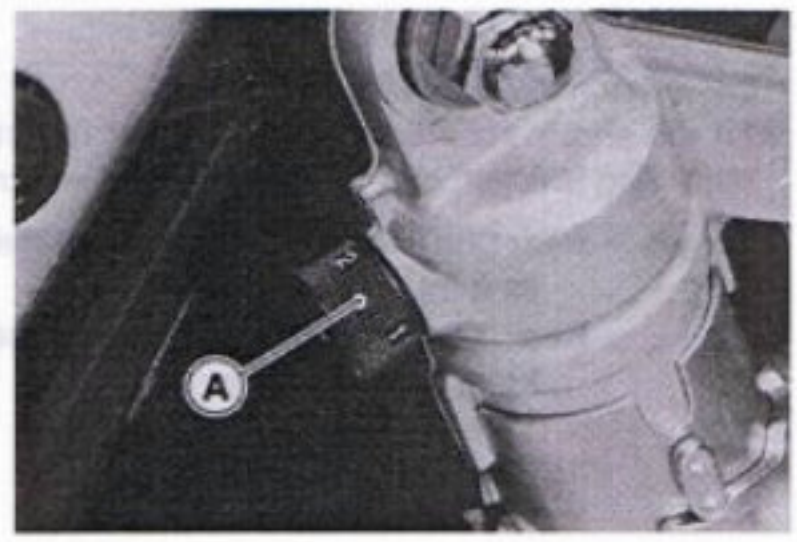

- ●To adjust the compression damping force, turn the upper damping adjuster [A] to the desired number aligning it with the mark.
- ○The standard adjuster setting for an average-build rider of 68 kg (150 lb) with no passenger and no accessories is number 2.

Compression Damping Adjustment

Adjuster Position	Damping Force	Setting	Load	Road	Speed
1	Weak	Soft	Light	Good	Low
↕	↕	↕	↕	↕	↕
4	Strong	Hard	Heavy	Bad	High

⚠WARNING

If a pair of upper adjusters are not adjusted equally, handling may be impaired and a hazardous condition may result.

Spring Preload Adjustment

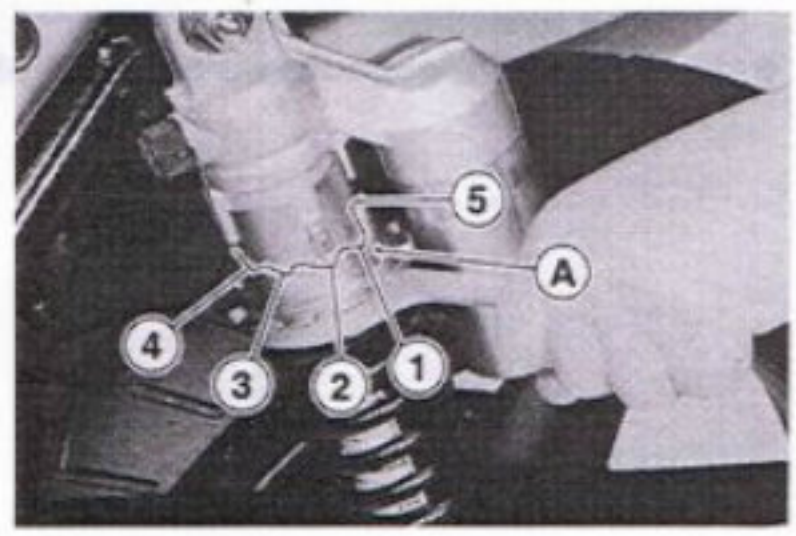

- ●To adjust the spring force, turn the adjuster [A] on each shock absorber to the desired position.
- ○The standard adjuster position for an average-build rider of 68 kg (150 lb) with no passenger and no accessories is 3rd step from the weakest position.

Spring Preload Adjustment

Adjuster Position	1	2	3	4	5
Spring Tension	⟶ Stronger				

⚠WARNING

If a pair of adjusters are not adjusted equally, handling may be impaired and a hazardous condition may result.

Rear Shock Absorber Removal

- Raise the rear wheel off the ground.

Special Tool – Jack: 57001-1238

- Unscrew the lower mounting bolt [A], and lift the shock absorber lower end out of the mounting bracket.

NOTE

○ *Pull off the mounting bolt while freeing stress on the bolt by lifting the swingarm (rear wheel) slightly.*

- Unscrew the upper mounting nut [B], and remove the rear shock absorber [C].

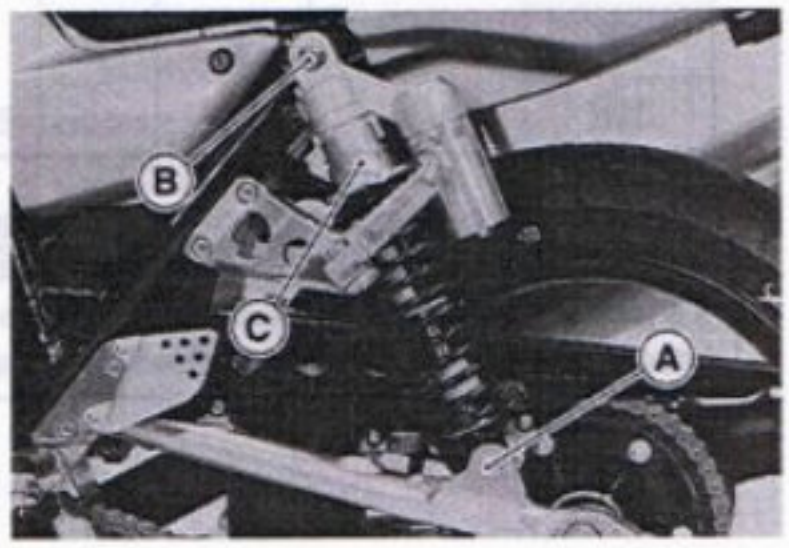

Rear Shock Absorber Installation

- Fit the shock absorber onto the upper mounting bolt and the lower mounting bracket, and fasten it with the mounting nut and bolt.

Torque – Rear Shock Absorber Upper Mounting Nuts: 49 N-m (5.0 kg-m, 36 ft-lb)
Rear Shock Absorber Lower Mounting Bolts: 39 N-m (4.0 kg-m, 29 ft-lb)

Rear Shock Absorber Scrapping

⚠WARNING

Since the rear shock absorber contains nitrogen gas, do not incinerate the rear shock absorber without first releasing the gas, or it may explode.
Do not point the valve toward your face or body when releasing nitrogen gas pressure. An oil mist will blow out of the shock.

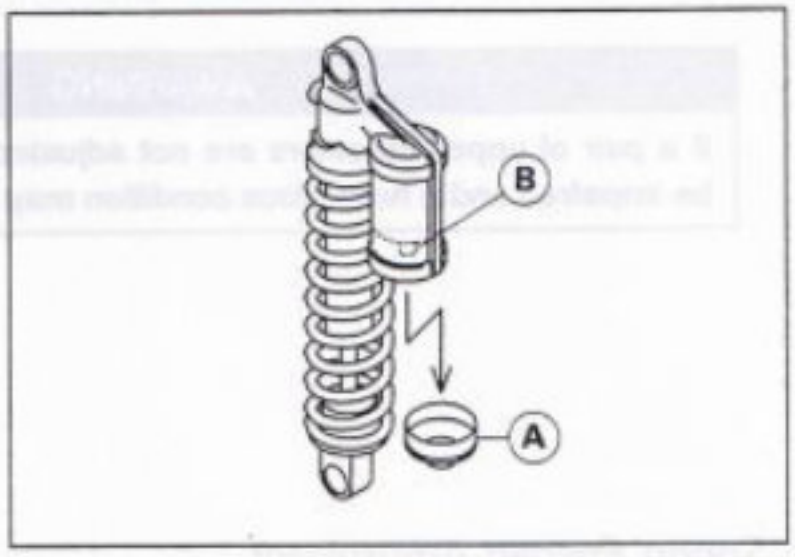

- Remove the lid [A].
- Slowly release nitrogen gas pressure by pushing down the valve core [B] with a screwdriver.
- After releasing the gas, scrap the rear shock absorber.

Swingarm

Swingarm Removal

- Remove:
  - Chain Cover
  - Drive Chain (cut, see Final Drive chapter)
  - Rear Wheel (see Wheels/Tires chapter)
  - Torque Link Front Mounting Bolt [A]
  - Brake Hose Clamp [B]
  - Rear Brake Hose
  - Rear Shock Absorber Lower Mounting Bolts [C]

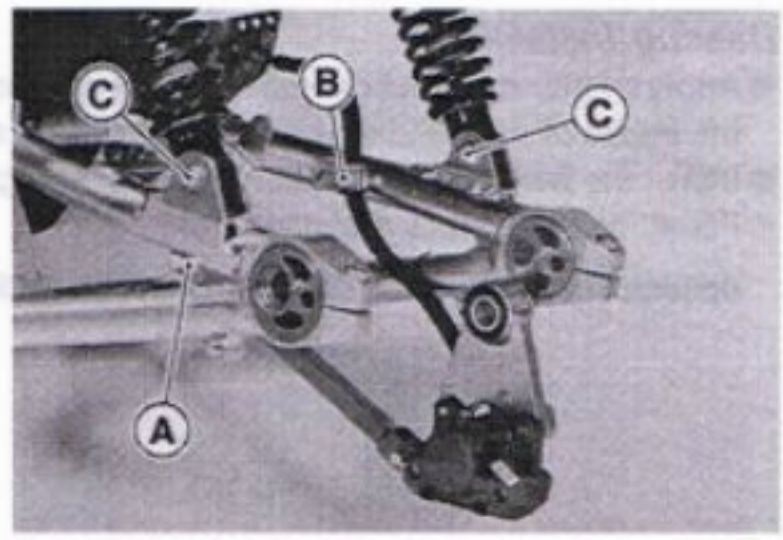

- Unscrew the swingarm pivot nut [A].
- Pull off the swingarm pivot shaft, and remove the swingarm [B].

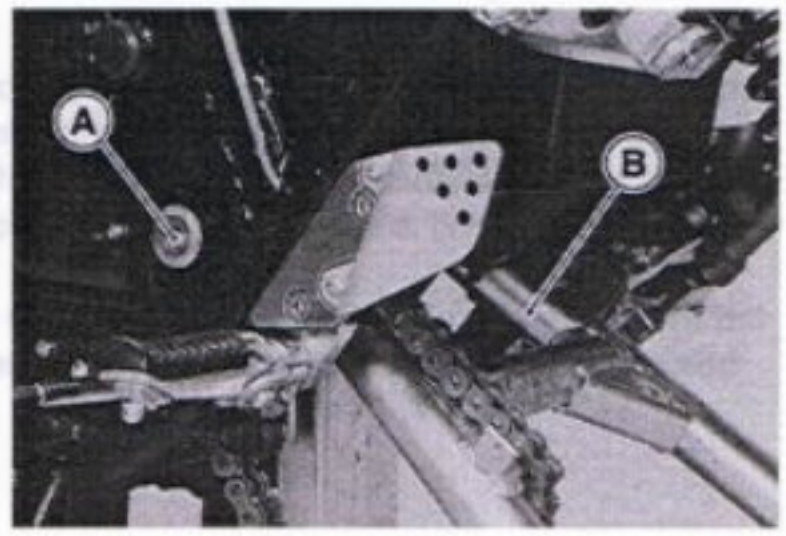

Swingarm Installation

- Apply plenty of molybdenum disulfide grease to the ball bearing and the inside of the needle bearings, and grease seals.
- Apply a high temperature grease to the threads of the swingarm pivot shaft.
- Install the swingarm.

Torque – Swingarm Pivot Nut: 98 N-m (10 kg-m, 72 ft-lb)

- Install the parts removed (see appropriate chapter).

Bearing Removal

- Remove:
  - Swingarm
  - Collar
  - Grease Seals
  - Circlip [A]

Special Tool – Inside Circlip Pliers: 57001-143 [B]

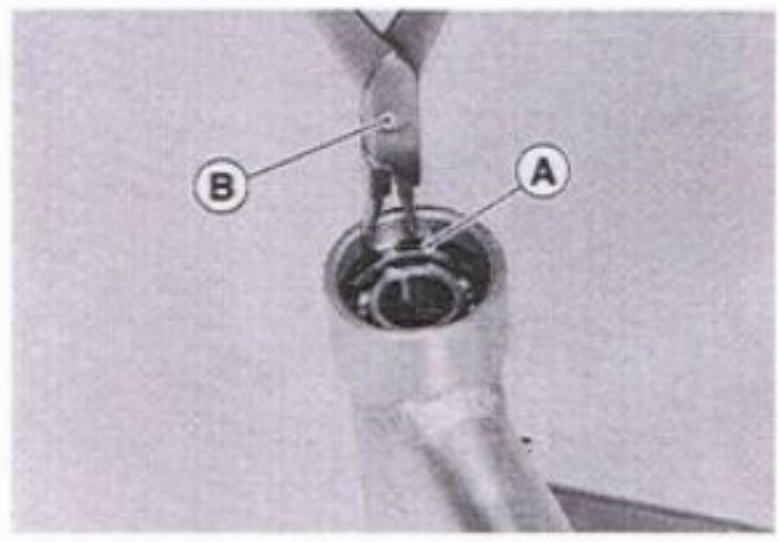

- Remove the ball bearing and needle bearings.

Special Tool – Oil Seal & Bearing Remover: 57001-1058 [A]

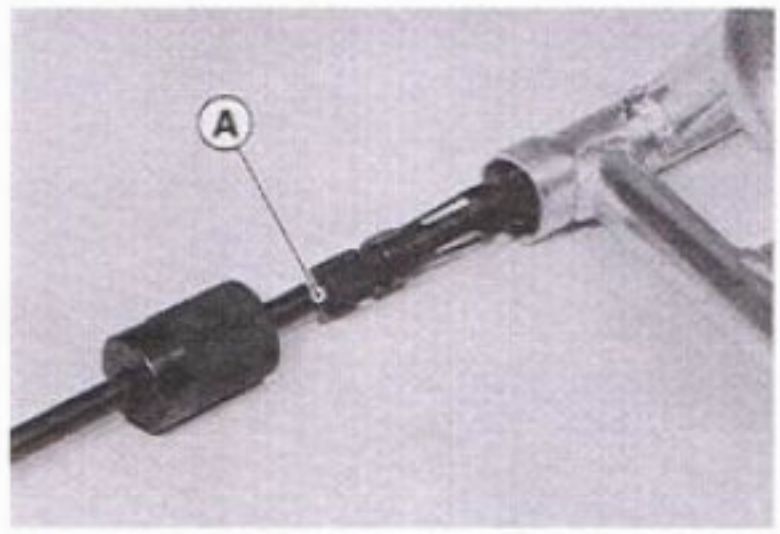

Bearing Installation

- ●Apply plenty of molybdenum disulfide grease to the ball bearing and the inside of the needle bearings, and grease seals.
- ●Install the ball bearing, needle bearings, and grease seals.
- ○For all bearings, face the marked side out.

Special Tool – Bearing Driver Set: 57001-1129 [A]

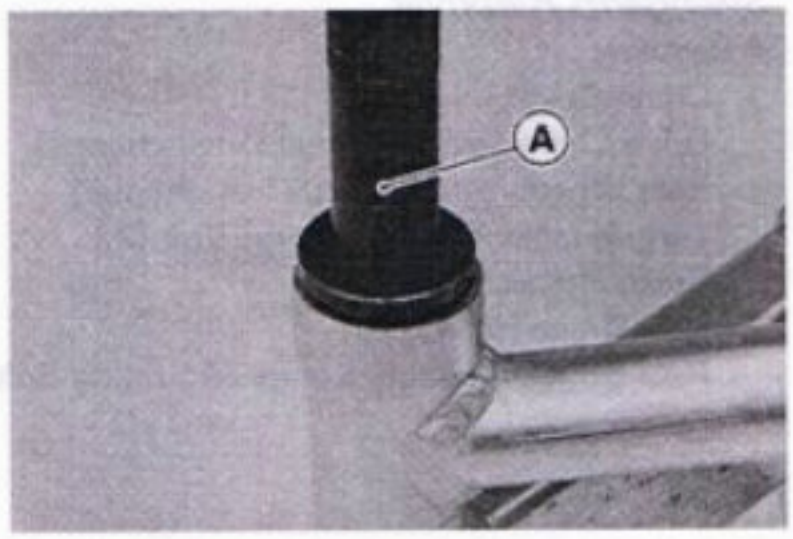

Lubrication

- ●Lubricate the swing arm pivot with molybdenum disulfide grease through the grease nipple [A] using a grease gun according to the Periodic Maintenance Chart (see General Information chapter). It is normal for a small amount of grease to seep out around the grease seals.
- ○If the swing arm pivot is disassembled, wipe all the old grease off the bearings, sleeves, and grease seals, then grease them.

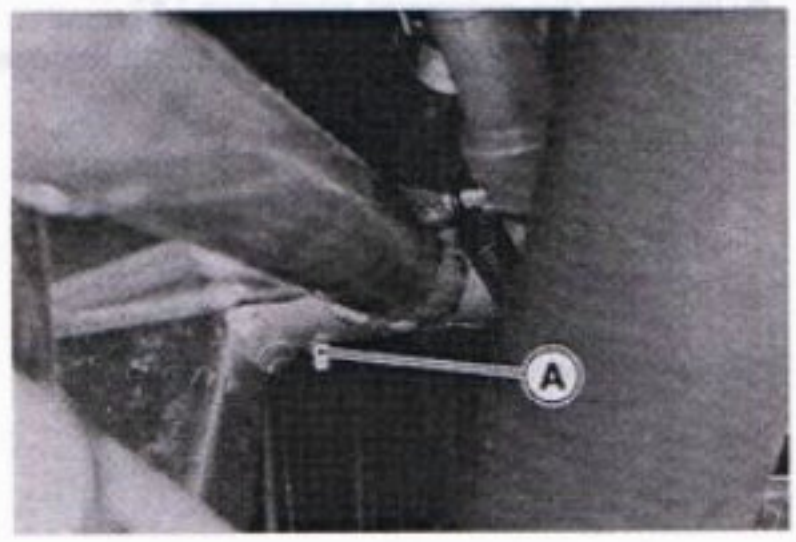

Steering

Table of Contents

Exploded View 13-2
Specifications 13-3
Steering 13-4
  Steering Inspection 13-4
  Steering Adjustment 13-4
Steering Stem 13-5
  Stem, Stem Bearing Removal 13-5
  Stem, Stem Bearing Installation 13-6
  Stem Bearing Lubrication 13-7
  Steering Stem Warp 13-7
Handlebar 13-8
  Handlebar Removal 13-8
  Handlebar Installation 13-8

Exploded View

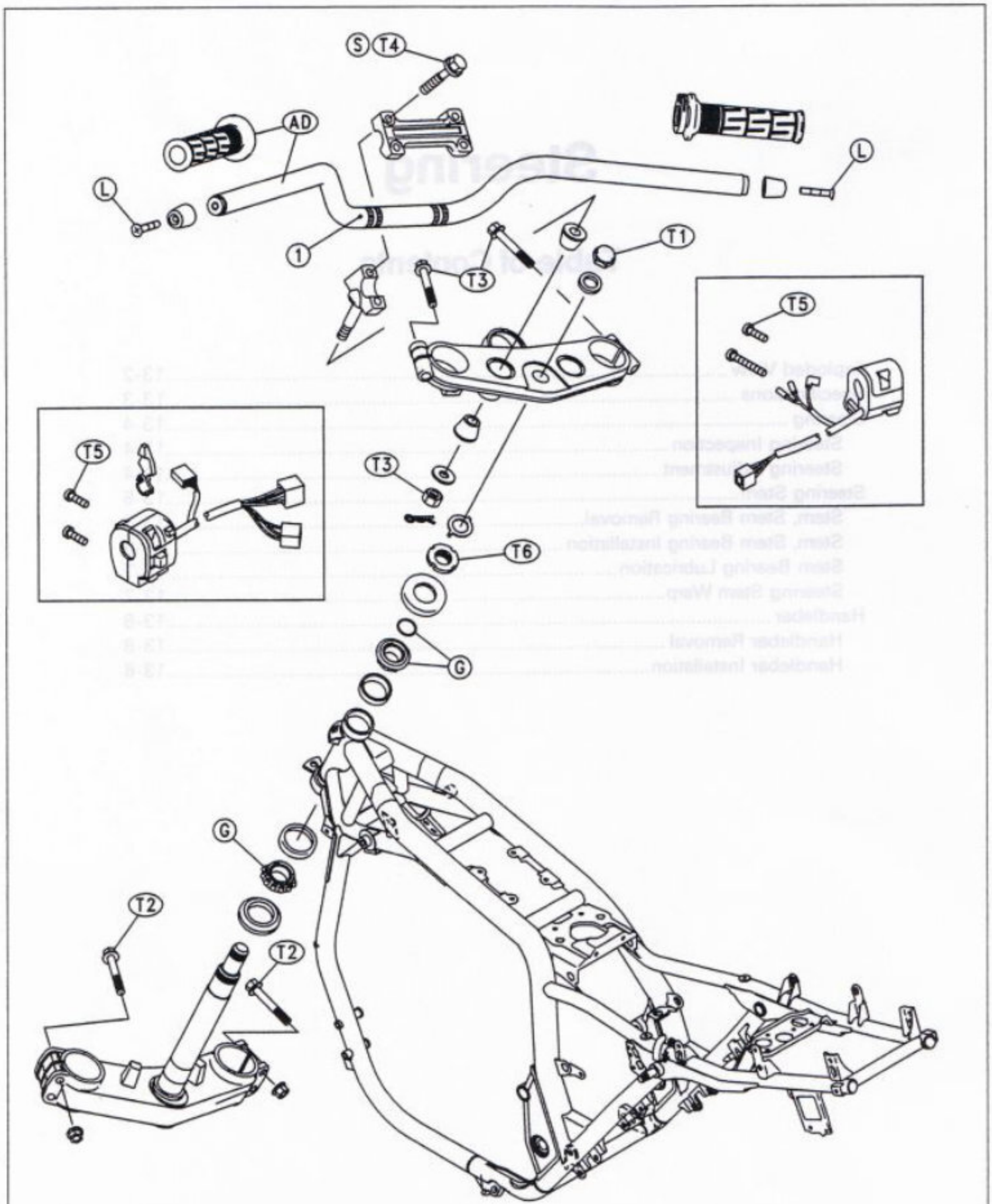

1. Align the punch mark with the gap between the handlebar lower holder and upper holer.
AD: Apply adhesive.
G: Apply grease.
L: Apply a non-permanent locking agent.
S: Follow the specific tightening sequence.

T1: 44 N-m (4.5 kg-m, 33 ft-lb)
T2: 21 N-m(2.1 kg-m, 15.0 ft-lb)
T3: 29 N-m (3.0 kg-m, 22 ft-lb)
T4: 23 N-m (2.3 kg-m, 16.5 ft-lb)
T5: 3.4 N-m (0.35 kg-m, 30 in-lb)
T6: 4.9 N-m(0.50 kg-m, 43 ft-lb) see the text.

Specifications

Special Tools – **Jack: 57001-1238**
Steering Stem Nut Wrench: 57001-1100
Head Pipe Outer Race Remover: 57001-1107
Head Pipe Outer Race Press Shaft: 57001-1075
Head Pipe Outer Race Driver: 57001-1076
Head Pipe Outer Race Driver: 57001-1106
Steering Stem Bearing Driver: 57001-137
Steering Stem Bearing Driver Adapter: 57001-1074
Bearing Puller: 57001-158
Bearing Puller Adapter: 57001-317

Steering

Steering Inspection

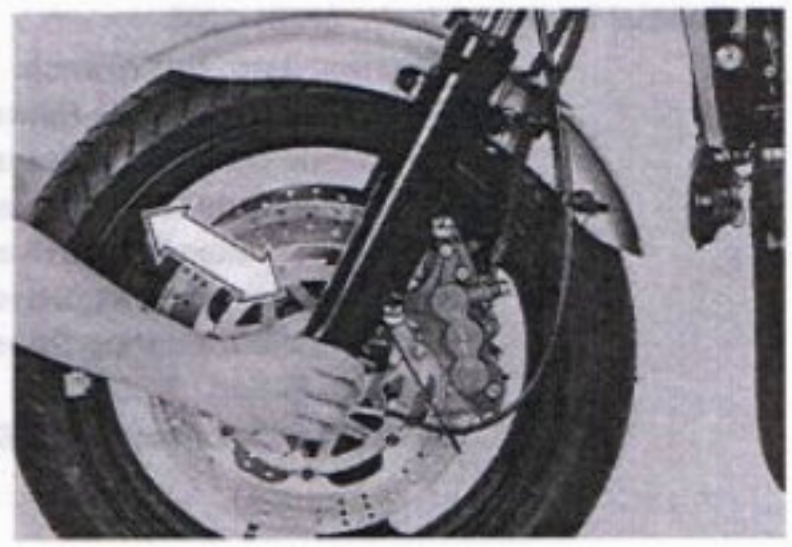

- ●Check the steering.
- ○Lift the front wheel off the ground using the jack.

Special Tool – Jack: 57001-1238

- ○With the front wheel pointing straight ahead, alternately tap each end of the handlebar. The front wheel should swing fully left and right from the force of gravity until the fork hits the stop.
- ★If the wheel binds or catches before the stop, the steering is too tight.
- ○Feel for steering looseness by pushing and pulling the forks.
- ★If you feel looseness, the steering is too loose.

NOTE

- ○*The cables and wiring will have some effect on the motion of the fork which must be taken into account.*
  Be sure the wires and cables are properly routed.
- ○*The beatings must be in good condition and properly lubricated in order for any test to be valid.*

Steering Adjustment

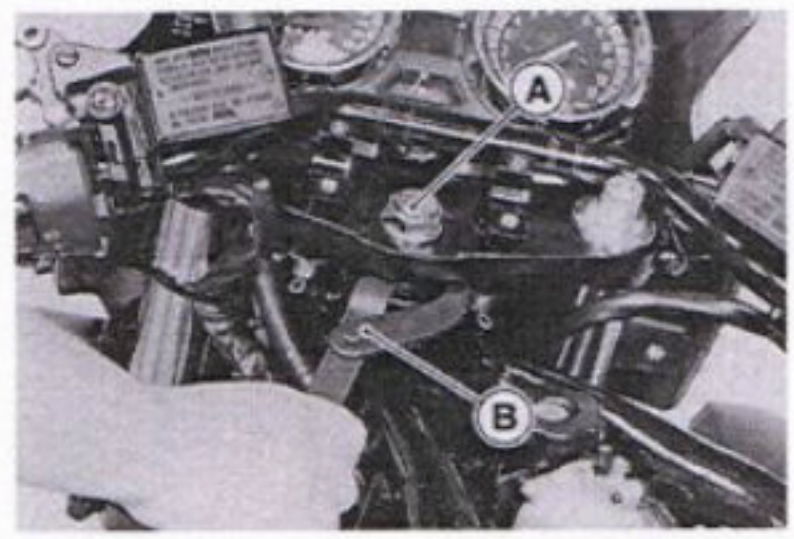

- ●Remove:
  Fuel Tank (see Fuel System chapter)
  Handlebar (place on one side with cables, harnesses and hoses installed)
- ●Loosen:
  Lower Fork Clamp Bolts (both sides)
  Stem Head Nut [A]
- ●Lift the front wheel off the ground using the jack.

Special Tool – Jack: 57001-1238

- ●Adjust the steering.

Special Tool – Steering Stem Nut Wrench: 57001-1100 [B]

- ★If the steering is too tight, loosen the stem nut a fraction of a turn.
- ★If the steering is too loose, tighten the stem nut a fraction of a turn.

NOTE

- ○*Turn the stem nut ⅙ turn at a time maximum.*

- ●Tighten the steering stem head nut and lower front fork clamp bolts.

Torque – Steering Stem Head Nut: 44 N-m (4.5 kg-m, 33 ft-lb)
Lower Front Fork Clamp Bolts: 21 N-m (2.1 kg-m, 15 ft-lb)

- ●Check the steering again.
- ★If the steering is still too tight or too loose, repeat the adjustment.

Steering Stem

Stem, Stem Bearing Removal

- Remove:
  Fuel Tank (see Fuel System Chapter)
  Fairing (ZR1100C, see Frame chapter)
  Handlebar
  Lower Bracket Bolts [A]

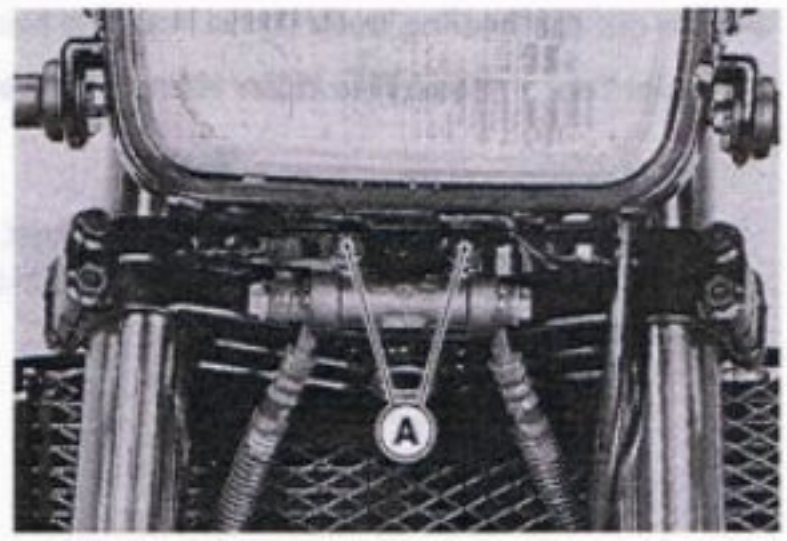

- Remove:
  Upper Bracket Nuts [A]
  Connectors
  Meter Unit, Headlight Unit and Bracket

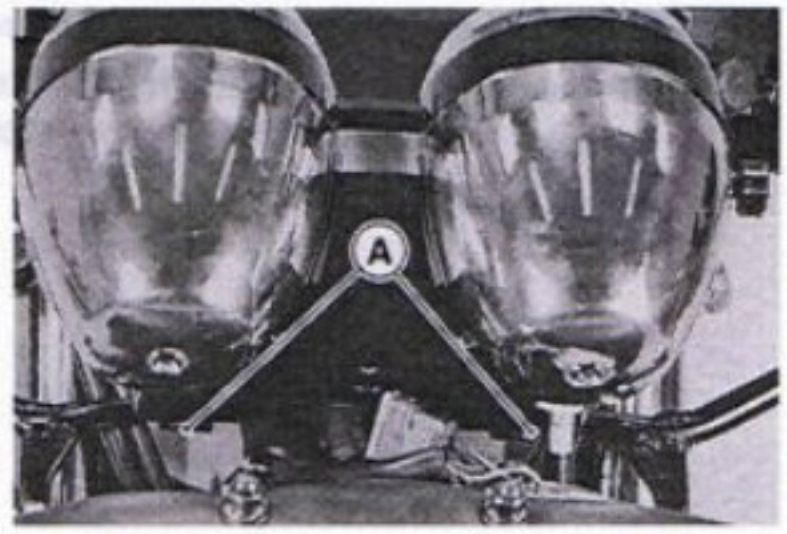

- Remove:
  Steering Stem Head Nut [A]
  Front Wheel (see Wheels/Tires chapter)
  Front Fork
  Steering Stem Head [B]

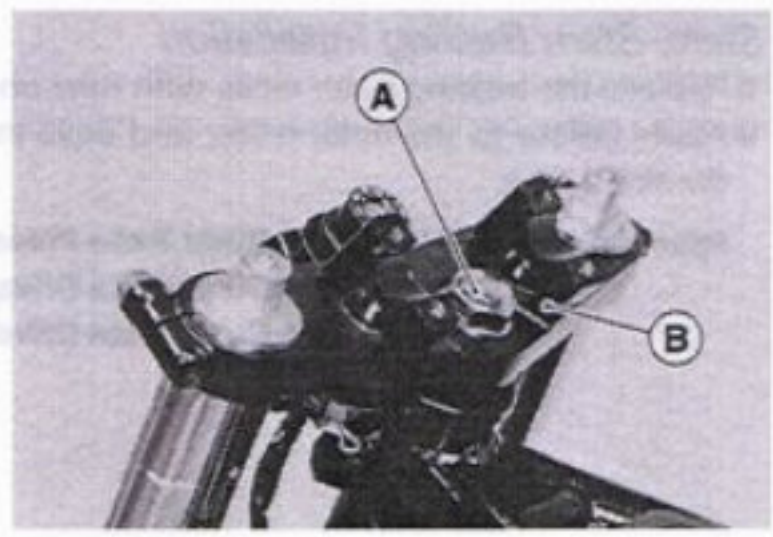

- Pushing up the stem base, and remove the following parts.
  Lock Washer [A]
  Stem Nut [B]
  Special Tool – Steering Stem Nut Wrench: 57001-1100
  Stem Cap [C]

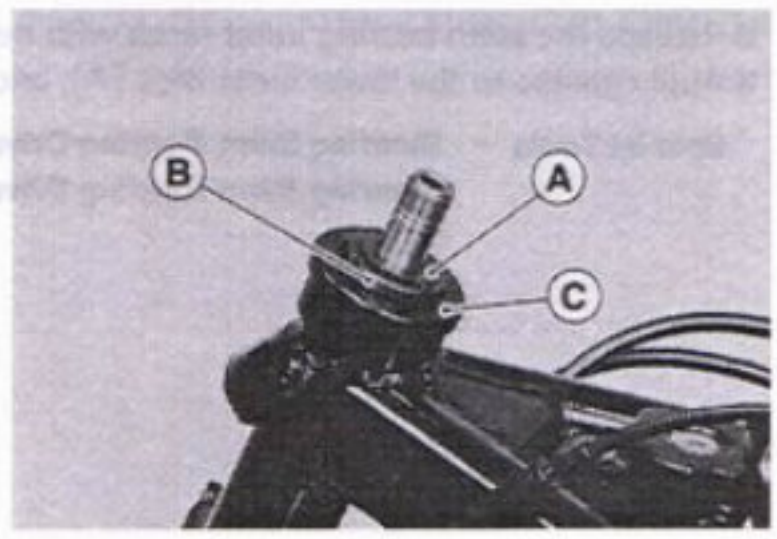

  O-ring [D]
  Steering Stem [E]

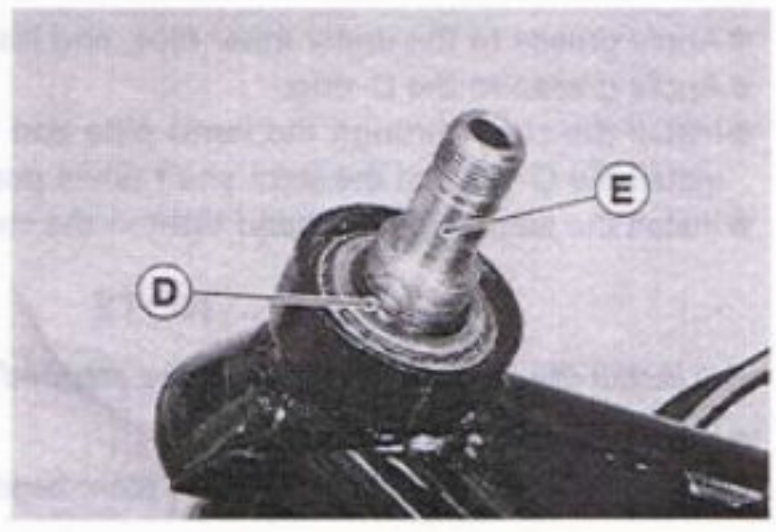

● Drive out the bearing outer races from the head pipe.

Special Tool – Head Pipe Outer Race Remover: 57001-1107 [A]

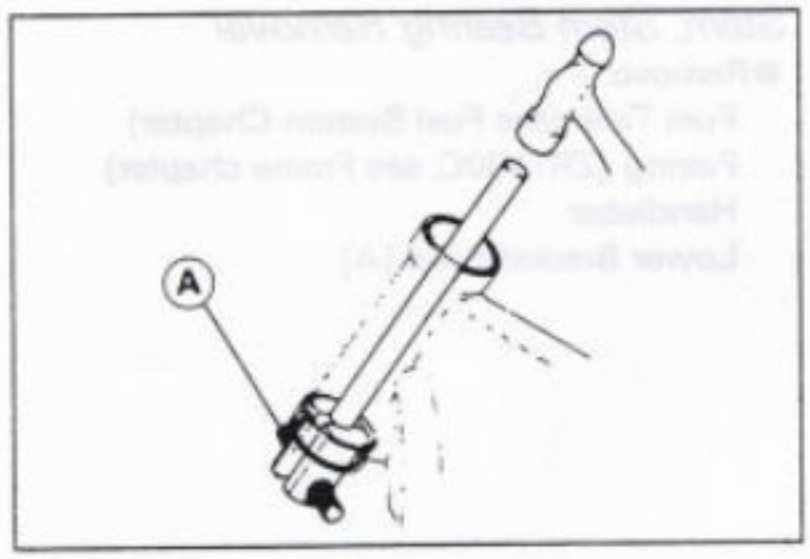

NOTE

○ *If either steering stem bearing is damaged, it is recommended that both the upper and lower bearings (including outer races) be replaced with new ones.*

● Remove the lower inner race [A] from the stem.

Special Tools – Bearing Puller: 57001-158 [B]
Bearing Puller Adapter: 57001-317 [C]

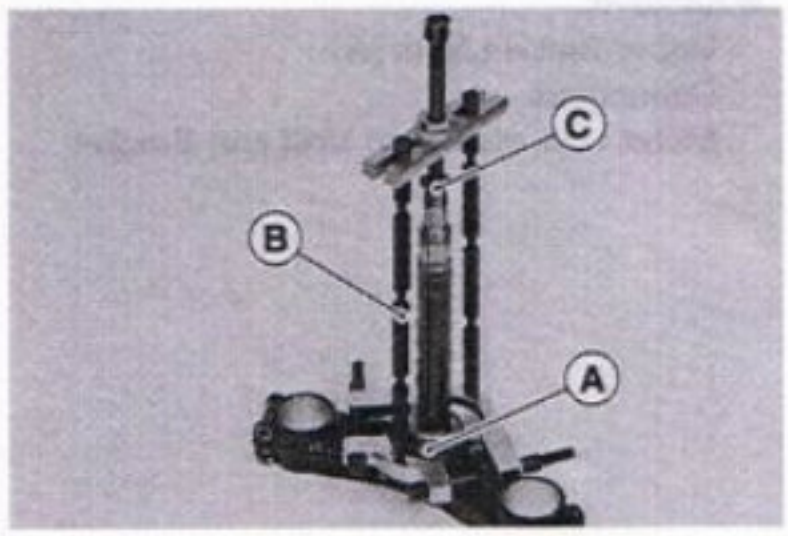

Stem, Stem Bearing Installation

● Replace the bearing outer races with new ones.
● Apply grease to the outer races, and drive them into the head pipe at the same time.

Special Tools – Head Pipe Outer Race Press Shaft: 57001-1075 [A]
Head Pipe Outer Race Driver: 57001-1076 [B]
Head Pipe Outer Race Driver: 57001-1106 [C]

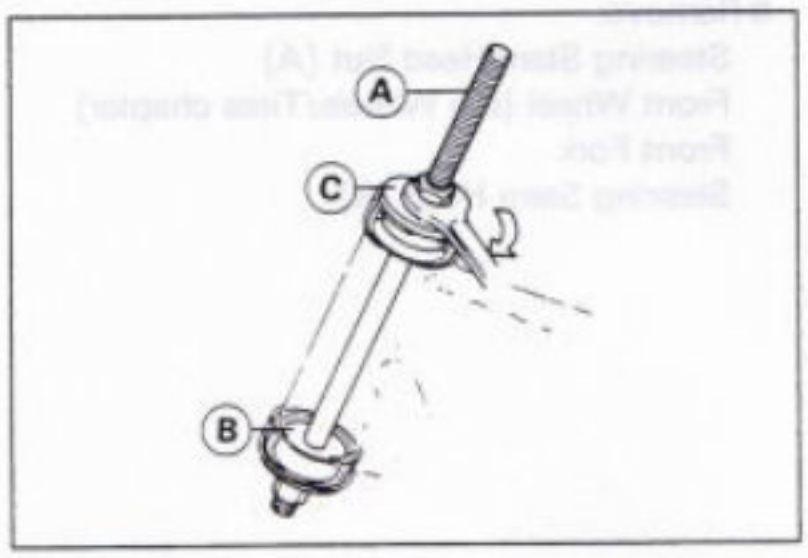

● Replace the stem bearing inner races with new ones.
● Apply grease to the lower inner race [A], and drive it onto the stem.

Special Tools – Steering Stem Bearing Driver: 57001-137 [B]
Steering Stem Bearing Driver Adapter: 57001-1074 [C]

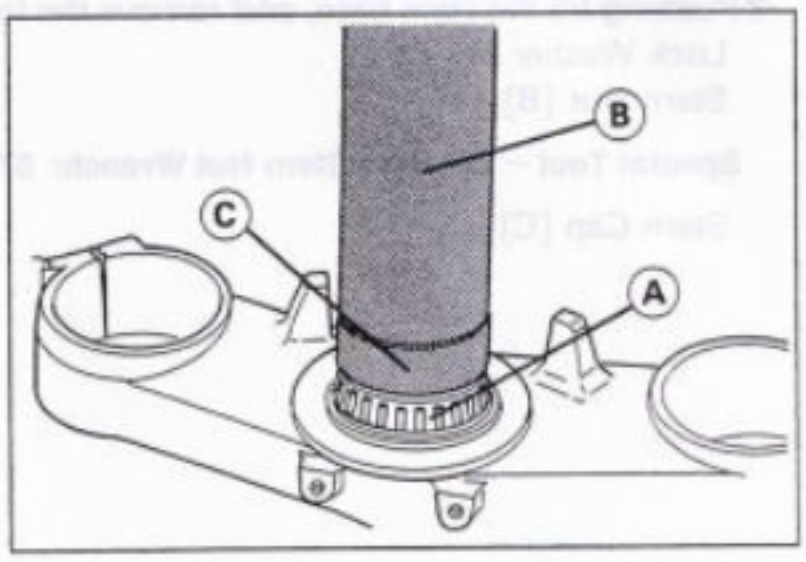

● Apply grease to the upper inner race, and install it in the head pipe.
● Apply grease to the O-ring.
● Install the stem through the hand pipe and the upper inner race, and install the O-ring on the stem shaft while pushing up on stem base.
● Install the stem cap, and hand tighten the stem nut.

NOTE

○ *Install the steering nut so that the stepped side faces down.*

● Install the stem head.
● Install the washer, and tighten the stem head nut lightly.

- Settle the inner races in place as follows:
  - Tighten the stem nut to 39 N-m (4.0 kg-m, 29 ft-lb) of torque. (To tighten the steering stem nut to the specified torque, hook the wrench on the stem nut, and pull the wrench at the hole by 220 N (22.2 kg, 49 lb) [A] force in the direction shown.

Special Tool – Steering Stem Nut Wrench: 57001-1100 [B]

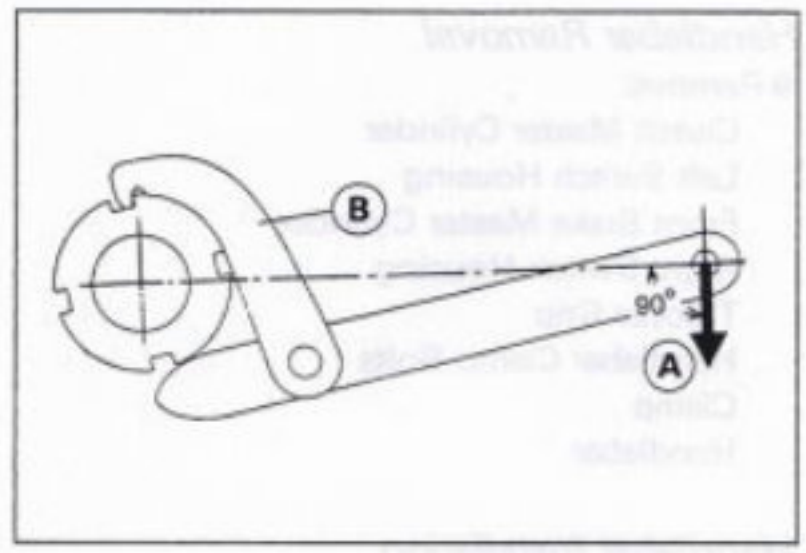

  - Check that there is no play and the steering stem turns smoothly without rattles. If not, the bearings on the inner races may be damaged.
  - Again back out the stem nut a fraction of a turn until it turns lightly.
- Turn the stem nut lightly clockwise until it just becomes hard to turn. Do not overtighten, or the steering will be too tight.

Torque – Steering Stem Nut: 4.9 N-m (0.50 kg-m, 43 in-lb)

- Install the front fork (see Suspension chapter).

NOTE

- *Tighten the fork upper clamp bolts first, next the stem head nut, last the fork lower clamp bolts.*

Torque – Upper Front Fork Clamp Bolts: 29 N-m (3.0 kg-m, 22 ft-lb)
Steering Stem Head Nut: 44 N-m (4.5 kg-m, 33 ft-lb)
Lower Front Fork Clamp Bolts: 21 N-m (2.1 kg-m, 15 ft-lb)

- Install the removed parts (see appropriate chapters).

⚠WARNING

Do not impede the handlebar turning by routing the cables, harnesses and hoses improperly (see General Information chapter).

Stem Bearing Lubrication

- Remove the steering stem.
- Using a high-flash point solvent, wash the upper and lower tapered roller bearings in the cages, and wipe the upper and lower outer races, which are press-fitted into the frame head pipe, clean of grease and dirt.
- Visually check the outer races and the rollers.
- ★Replace the bearing assemblies if they show wear or damage.
- Pack the upper and lower tapered roller bearings [A] in the cages with grease, and apply a light coat of grease to the upper and lower outer races.
- Install the steering stem, and adjust the steering.

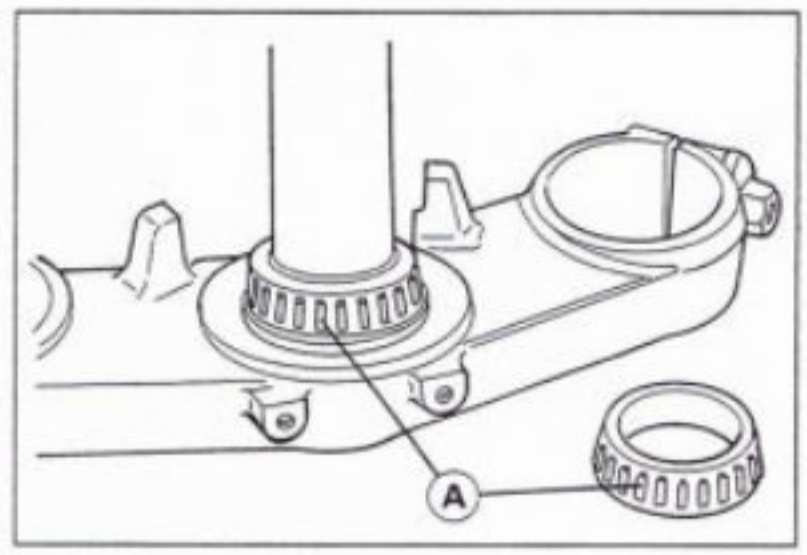

Steering Stem Warp

- Whenever the steering stem is removed, or if the steering cannot be adjusted for smooth action, check the steering stem for straightness.
- ★If the steering stem [A] is bent, replace the steering stem.

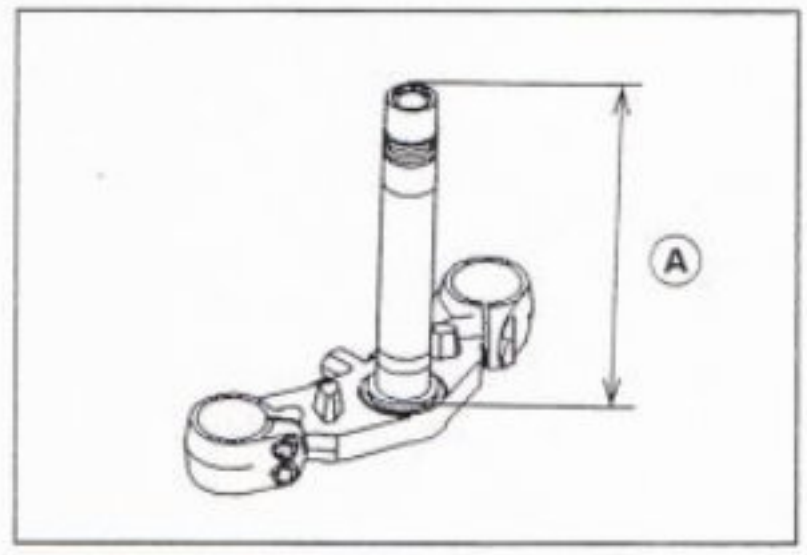

Handlebar

Handlebar Removal

- Remove:
  - Clutch Master Cylinder
  - Left Switch Housing
  - Front Brake Master Cylinder
  - Right Switch Housing
  - Throttle Grip
  - Handlebar Clamp Bolts
  - Clamp
  - Handlebar

Handlebar Installation

- Align the punch mark [A] on the handlebar with the gap [B] between the handlebar lower holder and upper holder.
- Tighten the handlebar holder bolts following the specified sequence.
  1. Front Handlebar Holder Bolts [C]
  2. Rear Handlebar Holder Bolts [D]

Torque – Handlebar Holder Bolts: 23 N-m (2.3 kg-m, 16.5 ft-lb)

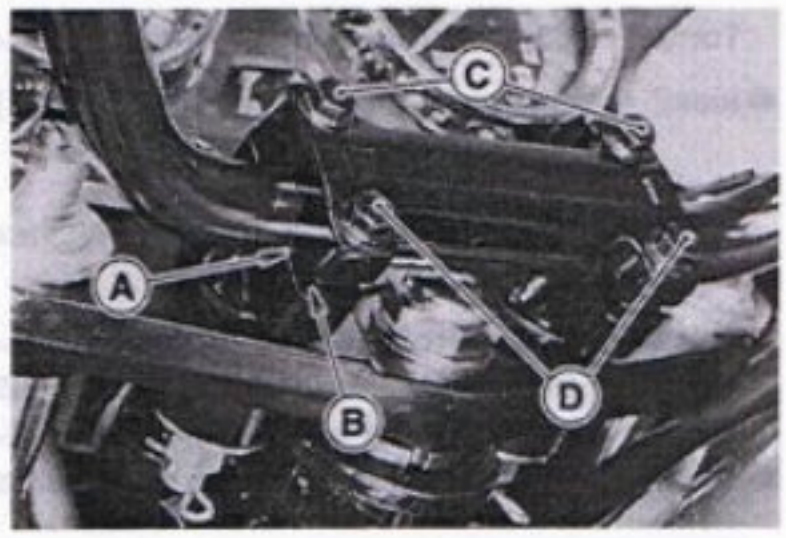

Frame

Table of Contents

Exploded View 14-2
Specifications 14-5
Seat 14-6
  Seat Removal 14-6
  Seat Installation 14-6
  Seat Lock Cable Lubrication and Inspection 14-6
Side Covers, Seat Cover 14-7
  Side Cover Removal 14-7
  Seat Cover Removal 14-7
Fairing (ZR1100C) 14-8
  Fairing Removal 14-8
Fenders 14-9
  Front Fender Removal 14-9
  Rear Fender Rear Removal 14-9
  Rear Fender Front Removal 14-9
  Rear Fender Front Installation 14-10
Frame 14-11
  Frame Inspection 14-11

Exploded View

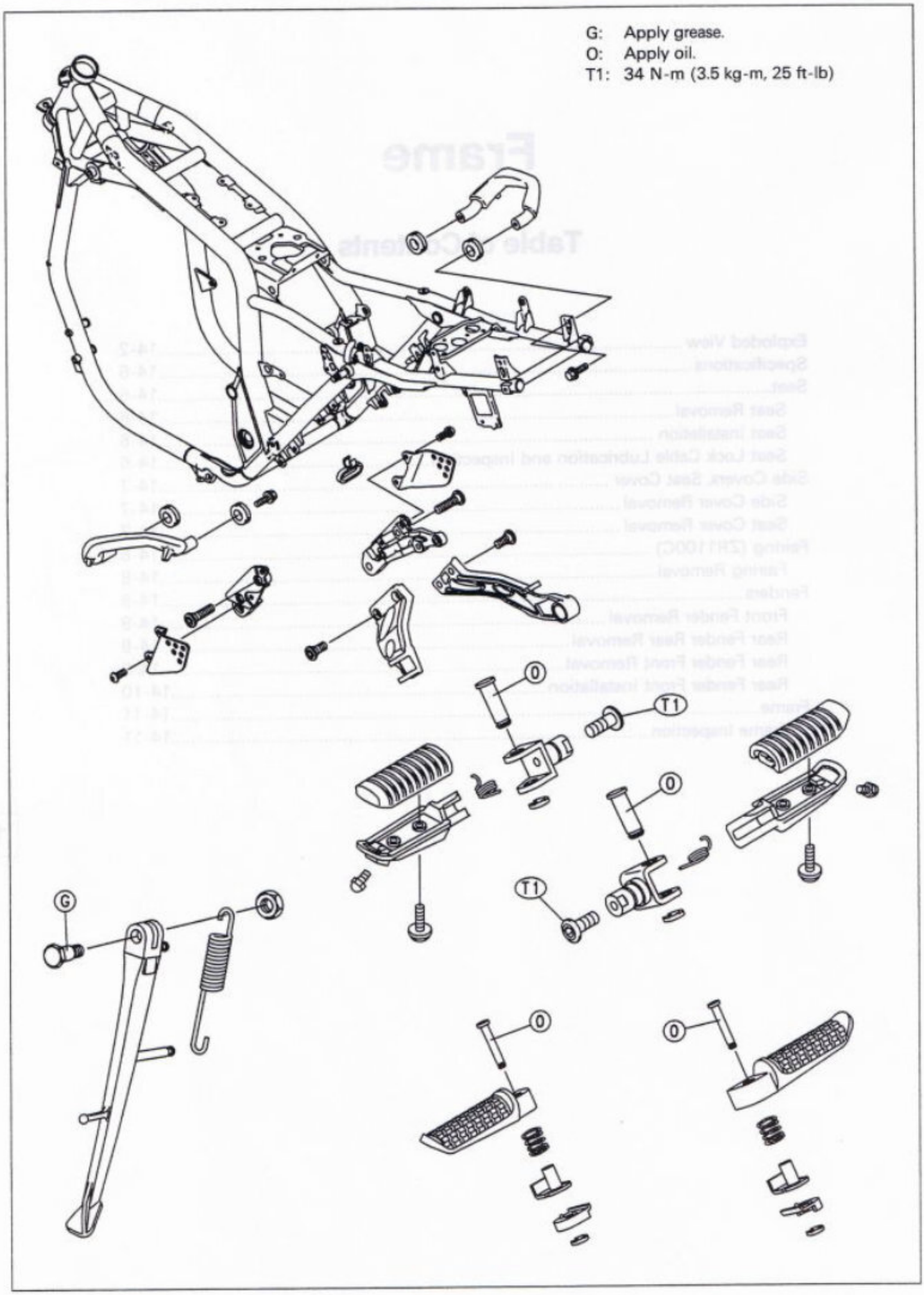

ZR1100C

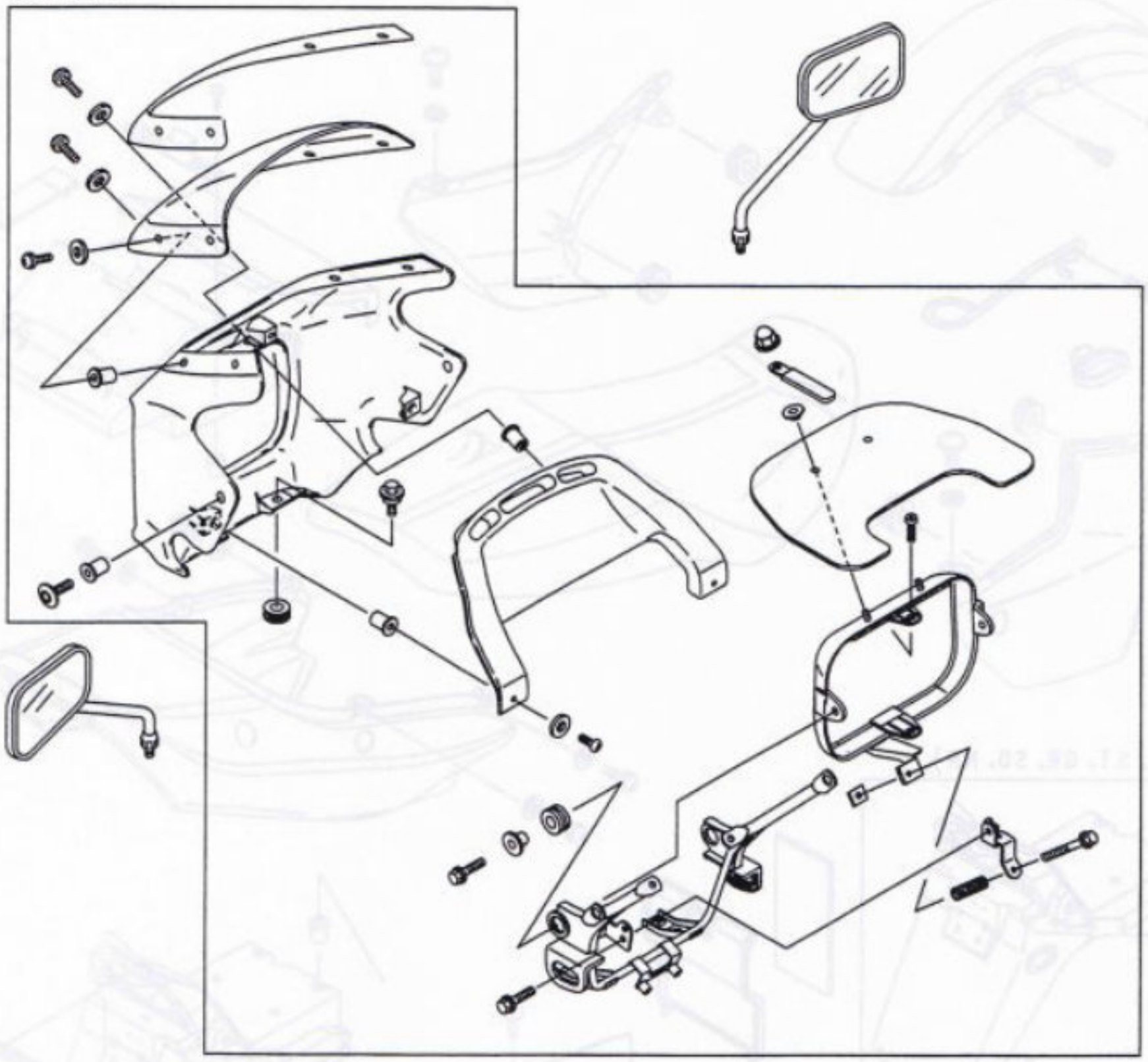

ZR1100D

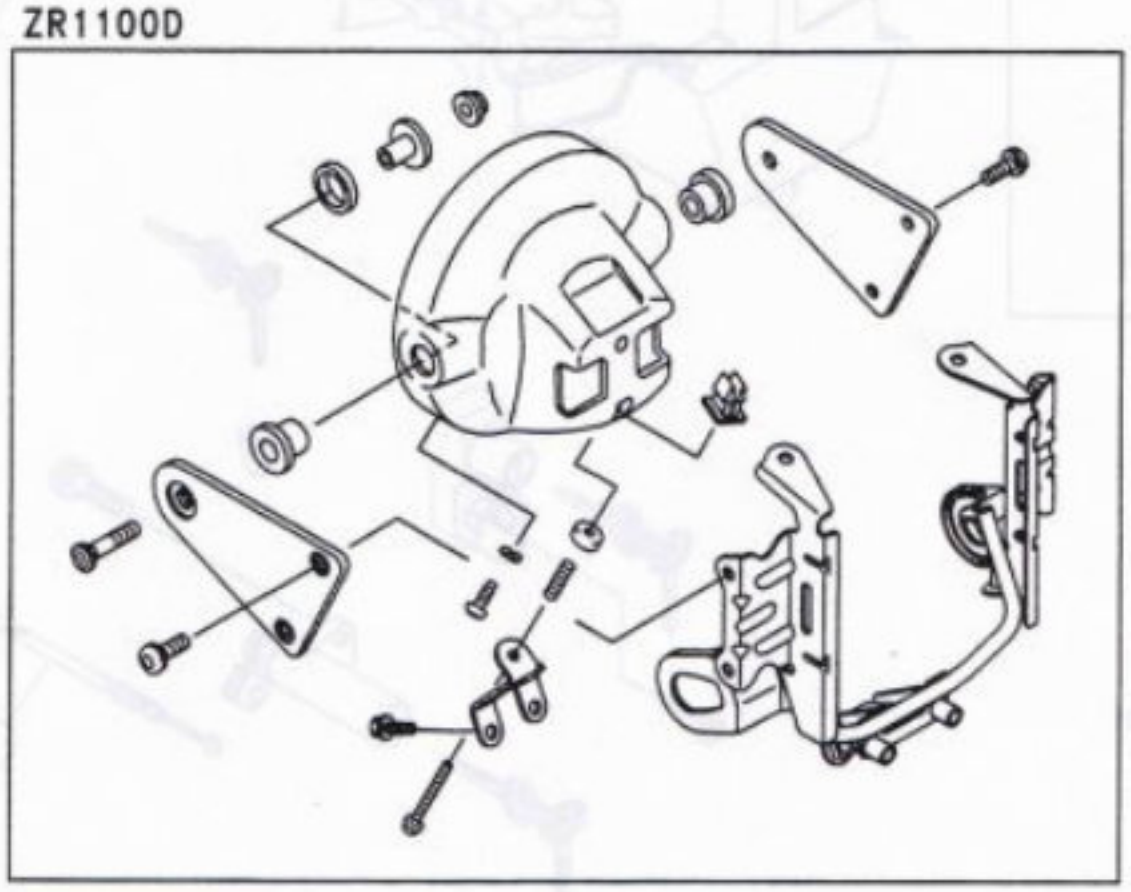

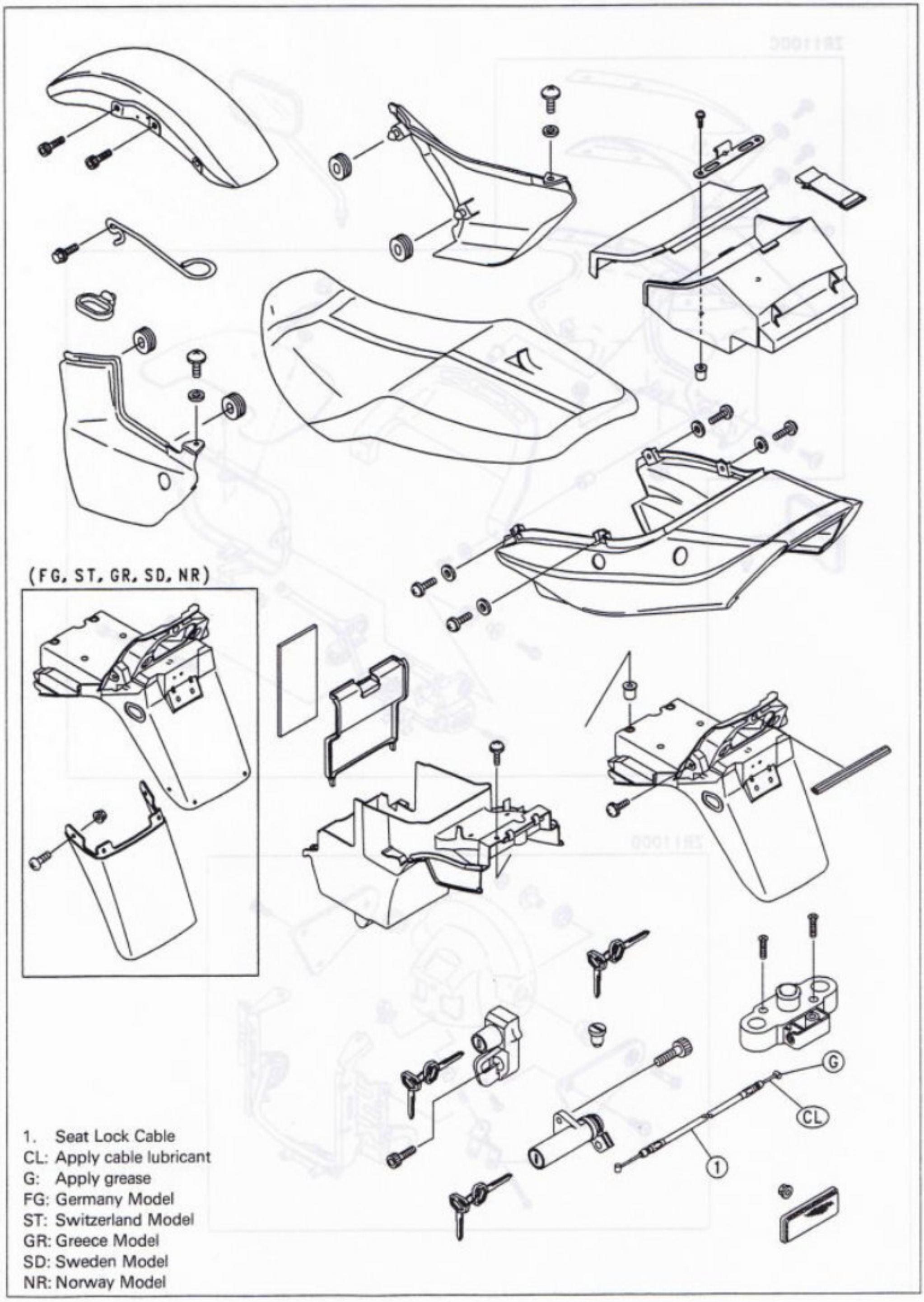

1. Seat Lock Cable
CL: Apply cable lubricant
G: Apply grease
FG: Germany Model
ST: Switzerland Model
GR: Greece Model
SD: Sweden Model
NR: Norway Model

Specifications

Special Tool – Pressure Cable Luber: K56019-021

Seat

Seat Removal

- Insert the ignition key [A] into the seat lock.
- Turn the ignition switch key clockwise.
- Swing open the seat and remove it.

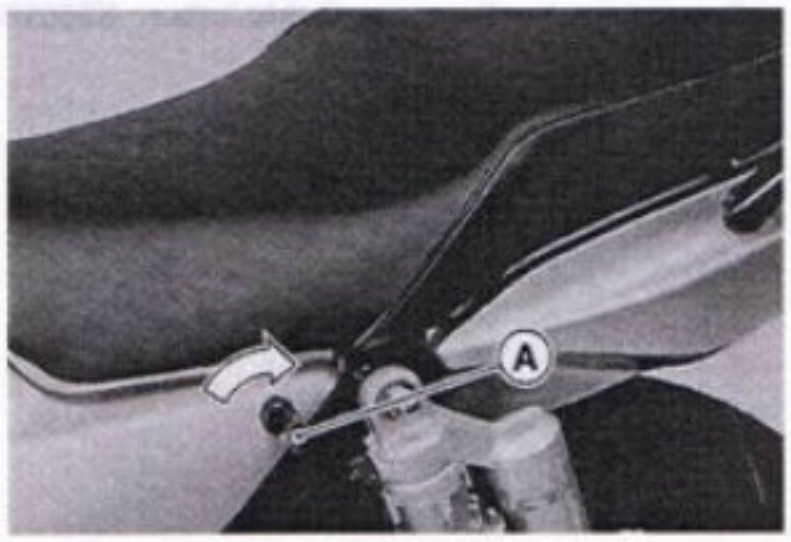

Seat Installation

- Slip the seat hook [A] under the brace [B] on the fuel tank bracket, and insert the seat pins [C] into the latch holes [D].

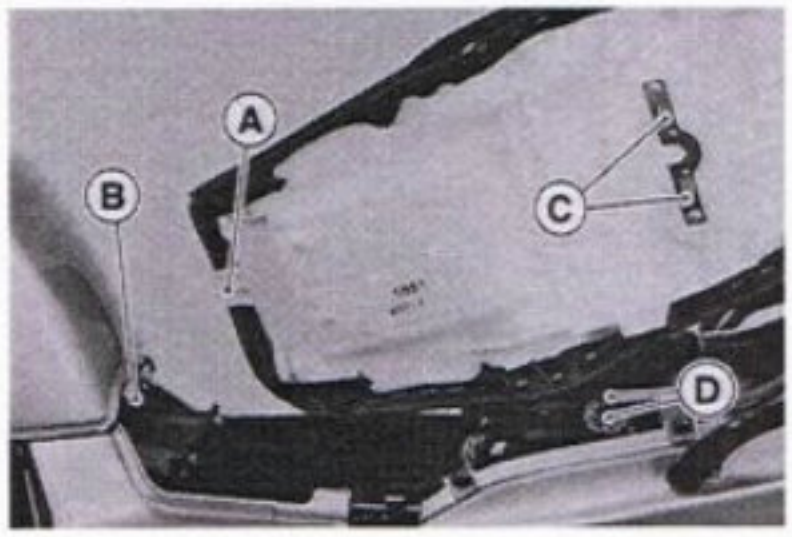

Seat Lock Cable Lubrication and Inspection

- Whenever the seat lock cable is removed, or in accordance with the Periodic Maintenance Chart, lubricate the cable (see General Lubrication in the Appendix chapter).
- Apply a thin coating of grease to the cable ends.
- Use the pressure cable luber to lubricate the cable.

Special Tool – Pressure Cable Luber: K56019-021

- With the cable disconnected at both ends, the cable should move freely in the cable housing.

Side Covers, Seat Cover

Side Cover Removal

- Remove the seat.
- Remove the screw [A], and pull the front parts of the side cover outward to clear the stoppers [B].

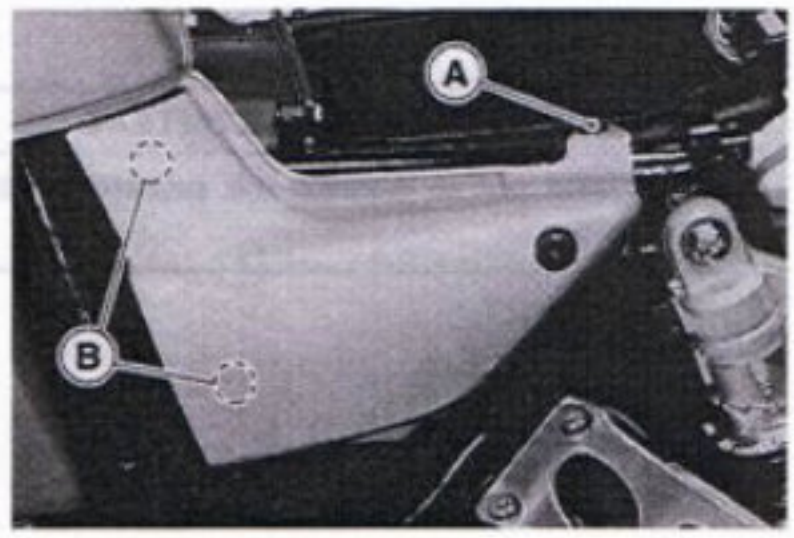

Seat Cover Removal

- Remove:
  Seat
  Screws [A] and Tool Kit Compartment [B]

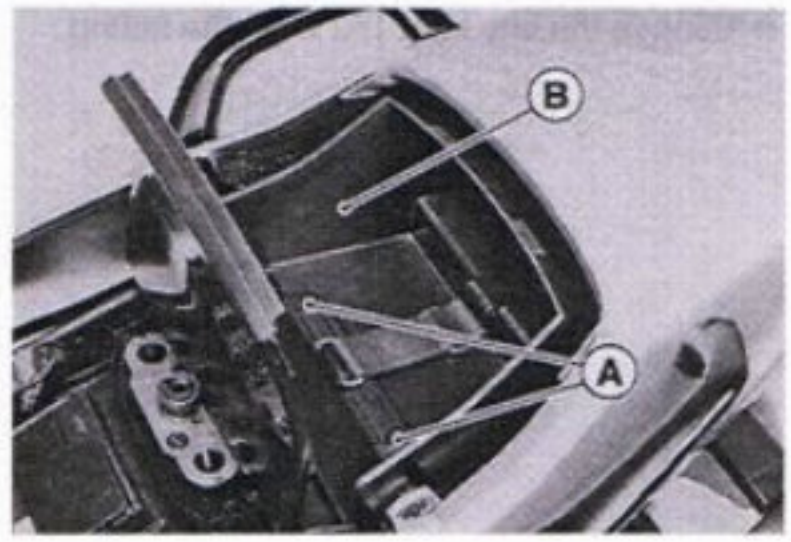

- Remove:
  Bolts [A] and Grab Rails [B]
  Screws [C]

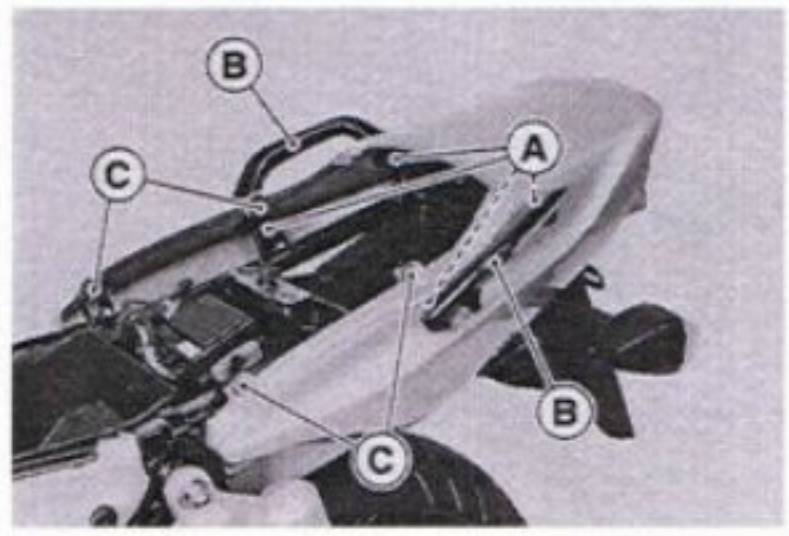

- Pull the seat cover [A] backward.

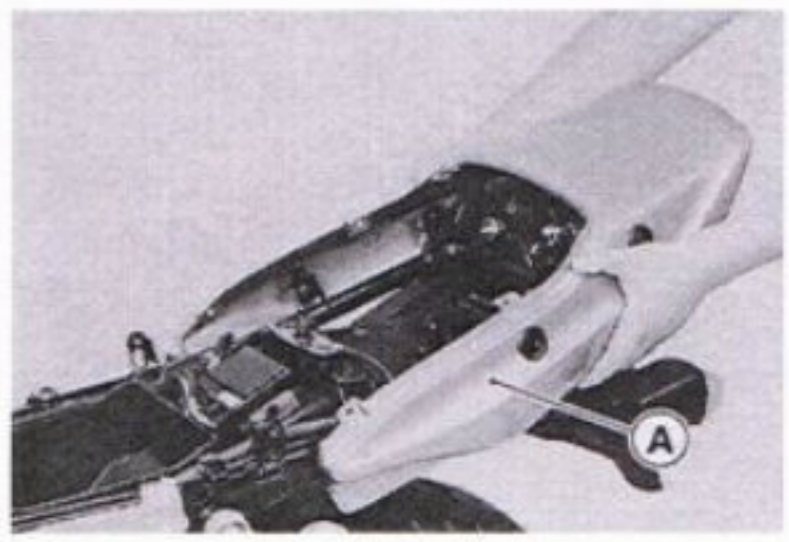

Fairing (ZR1100C)

Fairing Removal

CAUTION
Be careful not to scratch the painted surface during removal or installation.

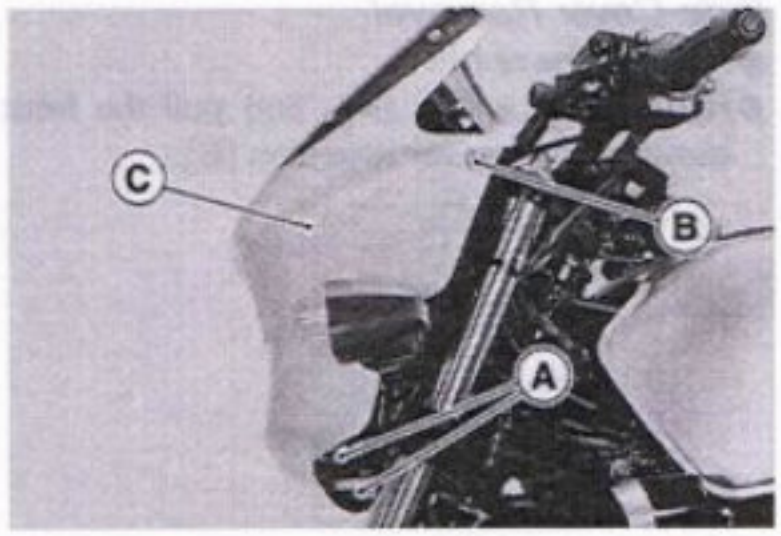

- Remove:
  Screws [A]
  Bolts [B] (both sides)
  Fairing [C]

- Remove the city light [A] from the fairing.

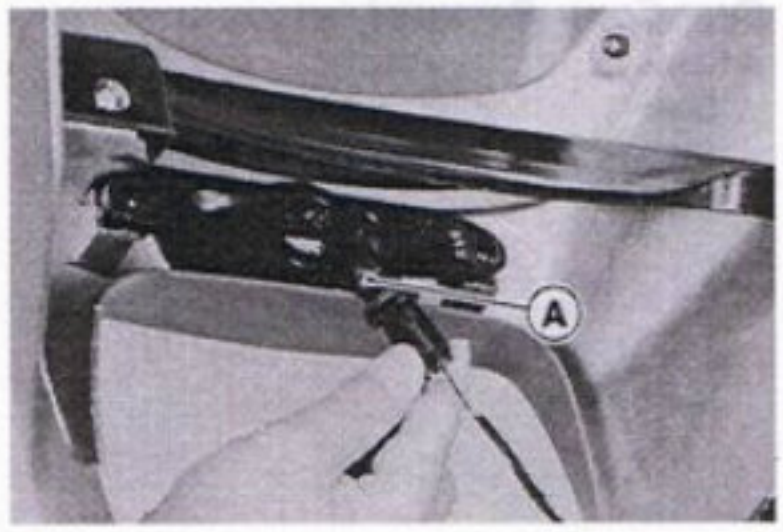

Fenders

Front Fender Removal

- Remove:
  - Speedometer Cable Clamp [A]
  - Bolts [B] (both sides)
  - Brake Hose Clamps [C] (both sides)
  - Front Fender [D]

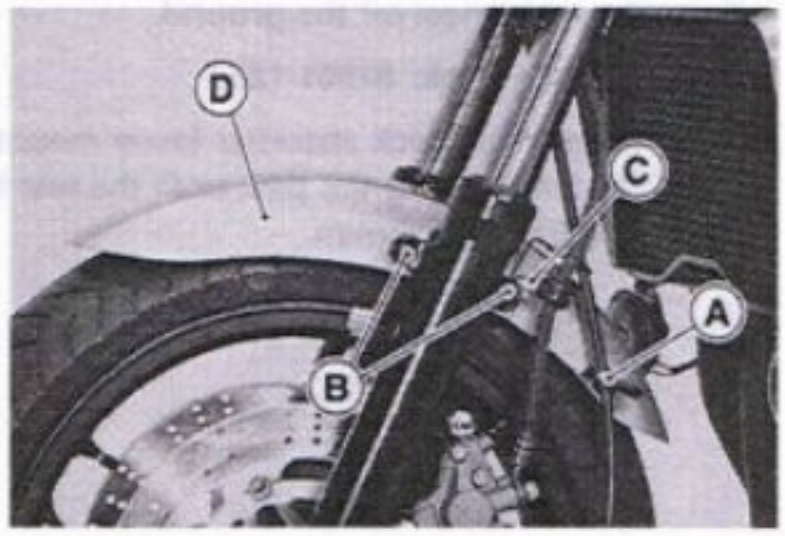

Rear Fender Rear Removal

- Remove:
  - Seat
  - Seat Cover
  - IC Igniter [A]
  - Turn Signal Relay [B]
  - Connectors [C]
  - Screws [D]
  - Rear Fender Rear [E]

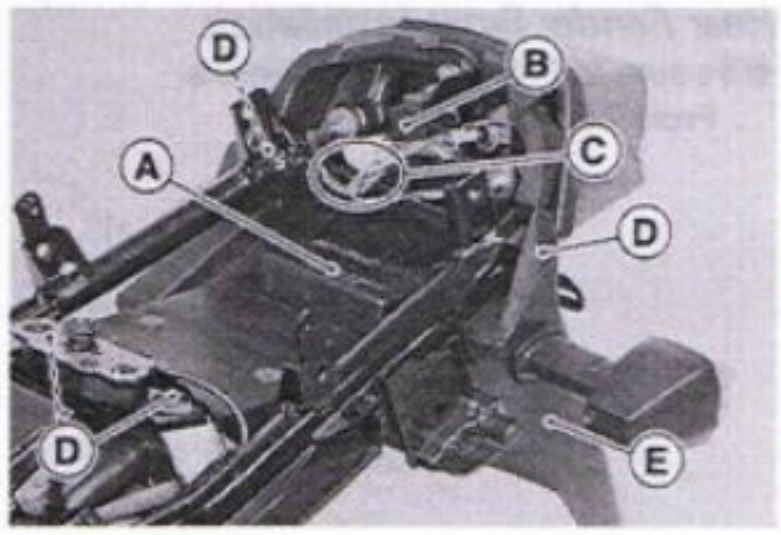

Rear Fender Front Removal

- Remove:
  - Rear Fender Rear
  - Bolt [A] and Silencer [B]

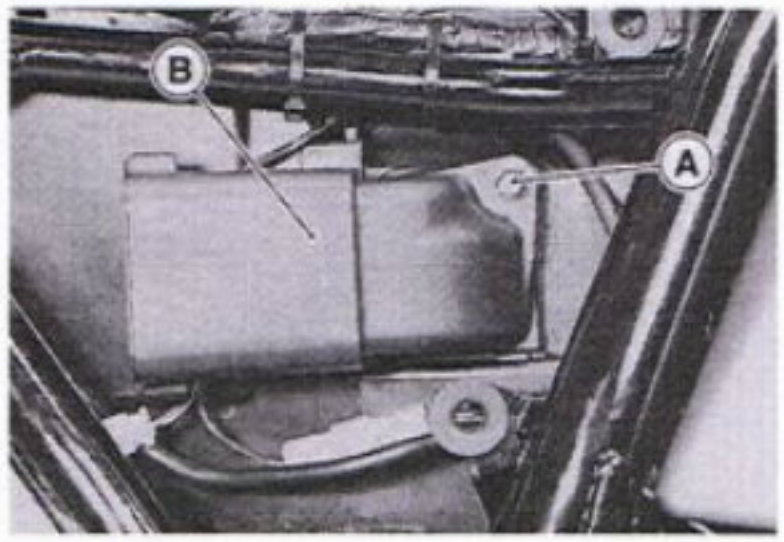

- Remove:
  - Junction Box
  - Battery
  - Hooks [A]

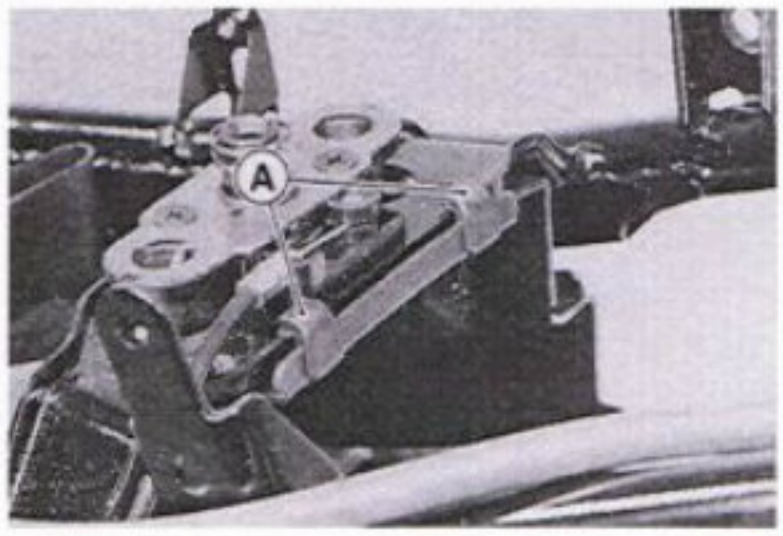

- Squeeze the brake lever slowly and hold it with a band [A].

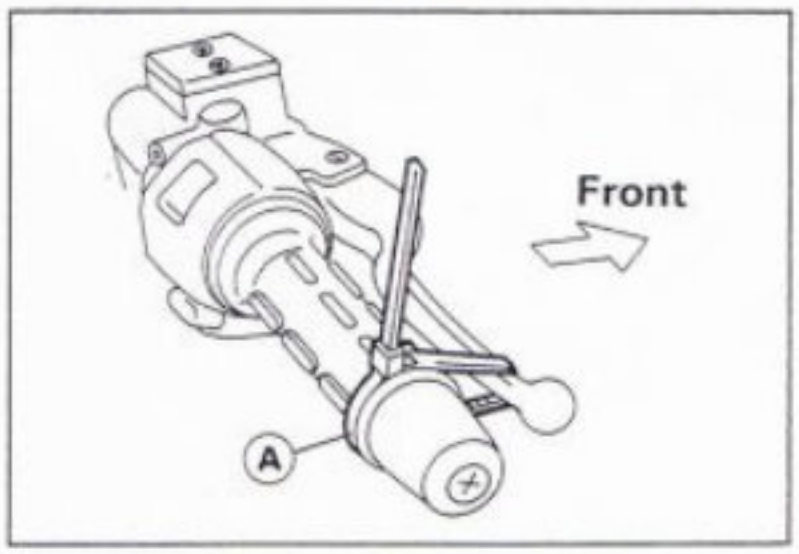

- Raise the rear wheel off the ground.

  Special Tool – Jack: 57001-1238

- Remove the rear shock absorber lower mounting bolts on both sides.
- Raise the frame using the jack until the rear fender front [A] removes out of the frame as shown.

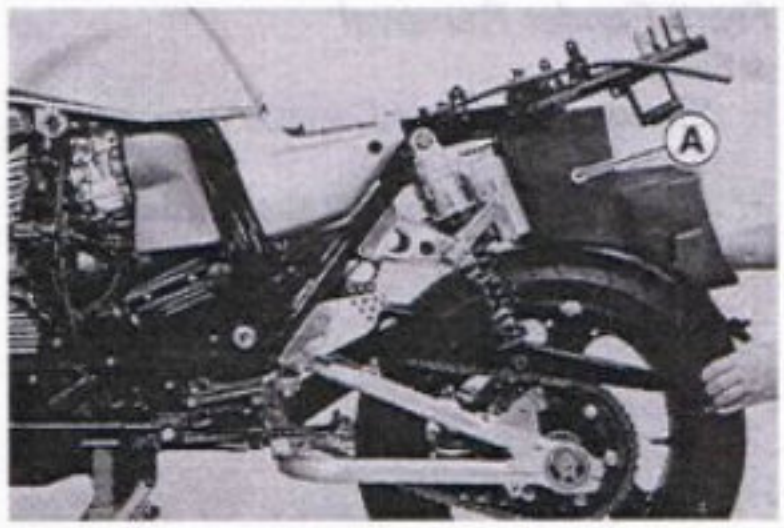

Rear Fender Front Installation

- Be sure to fit the following hooks.

  Front Left Side Hook [A]

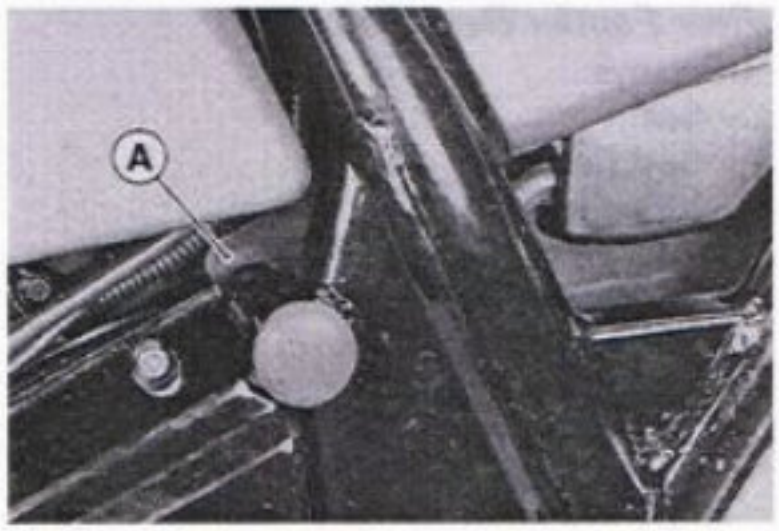

Rear Hooks [B]

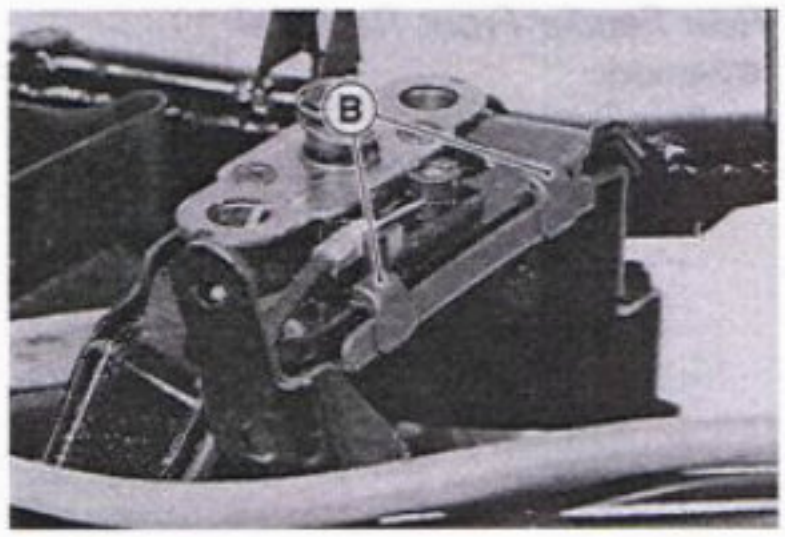

Frame

Frame Inspection

●Visually inspect the frame [A] for cracks, dents, bending, or warp.

★If there is any damage to the frame, replace it.

⚠WARNING

A repaired frame may fail in use, possibly causing an accident. If the frame is bent, dented, cracked, or warped, replace it.

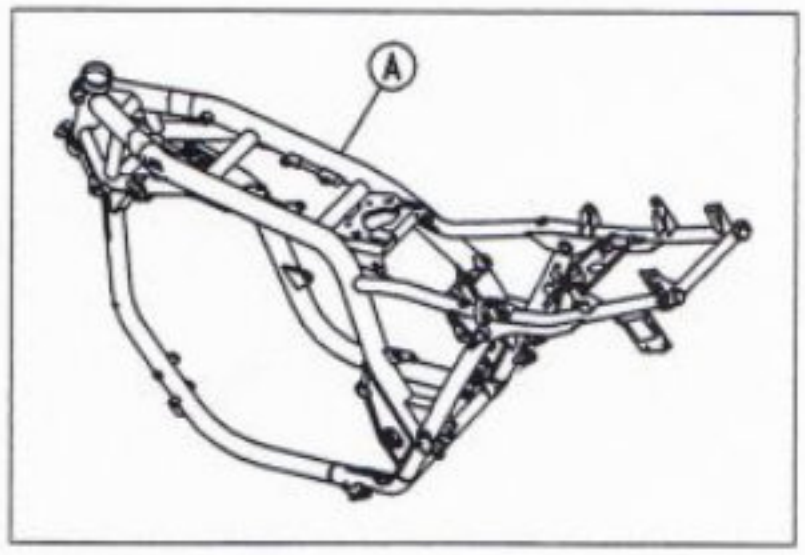

Electrical System

Table of Contents

Exploded View 15-2
Specifications 15-5
Parts Location 15-6
Precautions 15-7
Electrical Wiring 15-8
  Wiring Inspection 15-8
Battery 15-9
  Battery Removal 15-9
  Electrolyte Filling 15-9
  Initial Charge 15-11
  Precautions 15-11
  Interchange 15-11
  Charging Condition Inspection 15-12
  Refreshing Charge 15-12
Alternator 15-14
  Alternator Removal 15-14
  Alternator Installation 15-14
  Alternator Disassembly 15-14
  Alternator Assembly 15-16
  Operational Inspection 15-19
    Test No. 1-Battery Discharged 15-19
    Test No. 2-Battery Overcharged 15-19
    Test No. 3-Noise 15-19
  Stator Coil Inspection 15-20
  Rotor Coil Inspection 15-20
  Slip Ring Cleaning 15-20
  Slip Ring Diameter 15-20
  Carbon Brush Length 15-20
  Rectifier Inspection 15-21
  Regulator Inspection 15-21
  Alternator Ball Bearing Inspection 15-22
Ignition System 15-24
  Pickup Coil Removal 15-24
  Pickup Coil Installation 15-24
  Pickup Coil Inspection 15-25
  Ignition Coil Removal 15-25
  Ignition Coil Installation 15-26
  Ignition Coil Inspection 15-26
  Spark Plug Removal 15-27
  Spark Plug Installation 15-27
  Spark Plug Gap Inspection 15-27
  IC Igniter Inspection 15-27
Starter Motor 15-32
  Starter Motor Removal 15-32
  Starter Motor Installation 15-32
  Starter Motor Disassembly 15-33
  Starter Motor Assembly 15-33
  Brush Inspection 15-34
  Commutator Cleaning and Inspection 15-34
  Armature Inspection 15-35
  Brush Lead Inspection 15-35
  Brush Plate and Terminal Bolt Inspection 15-35
  Starter Relay Inspection 15-35
Lighting System 15-37
  Headlight Beam Horizontal Adjustment 15-37
  Headlight Beam Vertical Adjustment 15-37
  Headlight Bulb Replacement 15-38
  Tail/Brake Light Bulb Replacement 15-41
  Turn Signal Relay Inspection 15-41
Radiator Fan System 15-43
  Fan System Circuit Inspection 15-43
  Fan Motor Inspection 15-43
Meters, Gauges 15-44
  Meter Unit Removal 15-44
  Meter, Gauge Disassembly 15-44
  Bulb Replacement 15-44
  Tachometer Inspection 15-45
  Fuel Level Gauge Inspection 15-46
Switches and Sensors 15-47
  Brake Light Timing Inspection 15-47
  Brake Light Timing Adjustment 15-47
  Switch Inspection 15-47
  Radiator Fan Switch Inspection 15-48
  Water Temperature Switch Inspection 15-48
  Fuel Level Sensor Inspection 15-48
  Throttle Sensor Removal/Installation 15-49
  Throttle Sensor Inspection 15-49
  Throttle Sensor Position Adjustment 15-50
Junction Box 15-51
  Junction Box Fuse Circuit Inspection 15-51
  Starter Circuit/Headlight Relay Inspection 15-51
  Diode Circuit Inspection 15-52
Fuse 15-54
  30A Main Fuse Removal 15-54
  Junction Box Fuse Removal 15-54
  Fuse Installation 15-54
  Fuse Inspection 15-54
ZR1100-C/D Wiring Diagram (Europe) 15-55
ZR1100-C Wiring Diagram (Australia) 15-56
ZR1100-C Wiring Diagram (US and Canada) 15-57

Exploded View

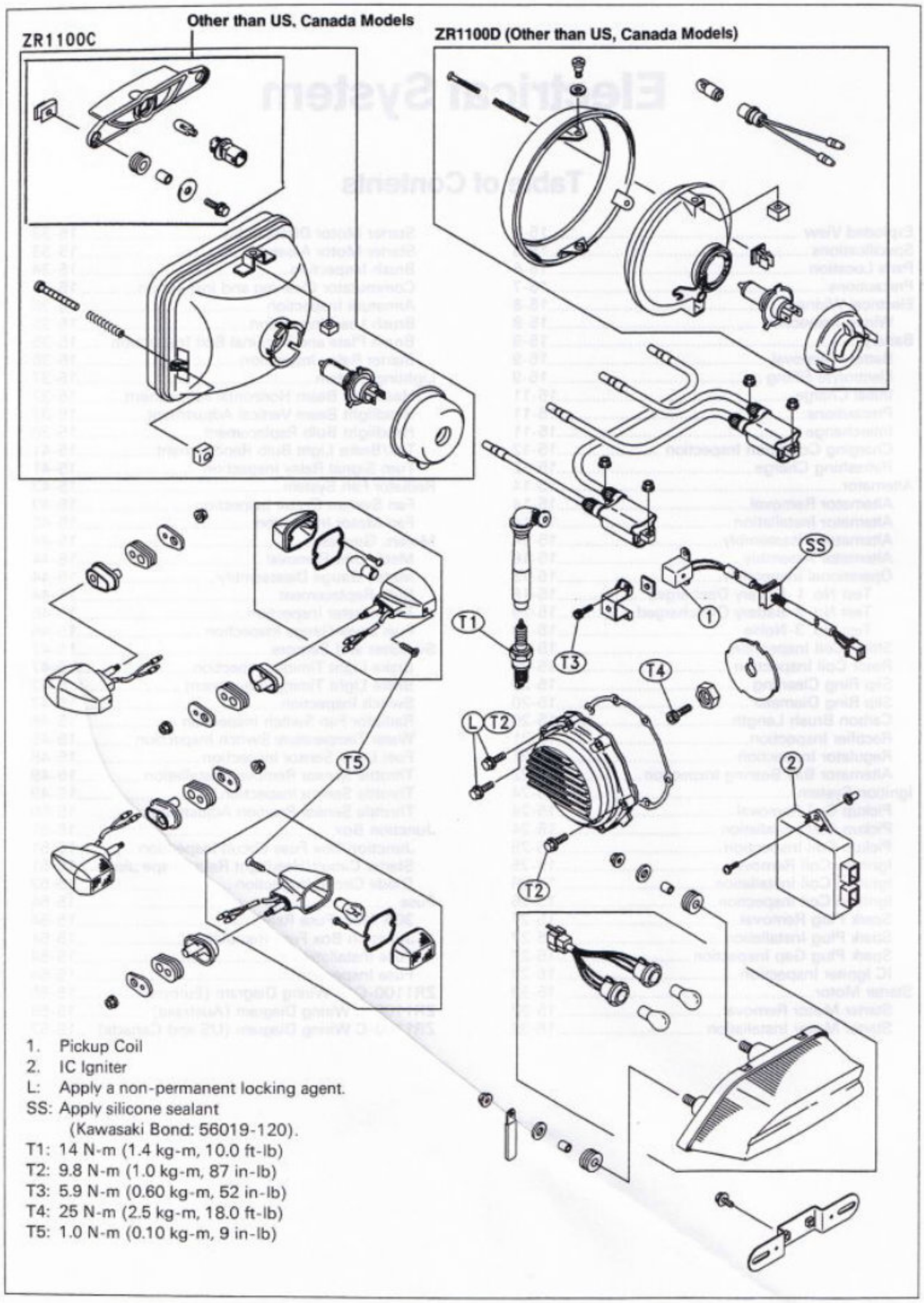

1. Pickup Coil
2. IC Igniter

L: Apply a non-permanent locking agent.
SS: Apply silicone sealant (Kawasaki Bond: 56019-120).
T1: 14 N-m (1.4 kg-m, 10.0 ft-lb)
T2: 9.8 N-m (1.0 kg-m, 87 in-lb)
T3: 5.9 N-m (0.60 kg-m, 52 in-lb)
T4: 25 N-m (2.5 kg-m, 18.0 ft-lb)
T5: 1.0 N-m (0.10 kg-m, 9 in-lb)

1. Radiator Fan Switch
2. Water Temperature Switch
3. Oil Pressure Switch

EO: Apply engine oil.
L: Apply a non-permanent locking agent.
SS: Apply Silicone sealant
(Kawasaki Bond: 56019-120)
T1: 25 N-m (2.5 kg-m, 18.0 ft-lb)
T2: 9.8 N-m (1.0 kg-m, 87 in-lb)
T3: 4.4 N-m, (0.45 kg-m, 39 in-lb)
T4: 2.5 N-m (0.25 kg-m, 22 in-lb)
T5: 3.4 N-m (0.35 kg-m, 30 in-lb)
T6: 11 N-m (1.1 kg-m, 95 in-lb)
T7: 4.9 N-m (0.50 kg-m, 43 in-lb)
T8: 8.8 N-m (0.90 kg-m, 78 in-lb)
T9: 24 N-m (2.4 kg-m, 17.5 ft-lb)
T10: 7.8 N-m (0.80 kg-m, 69 in-lb)
T11: 15 N-m (1.5 kg-m, 11.0 ft-lb)
T12: 1.5 N-m (0.15 kg-m, 13 in-lb)

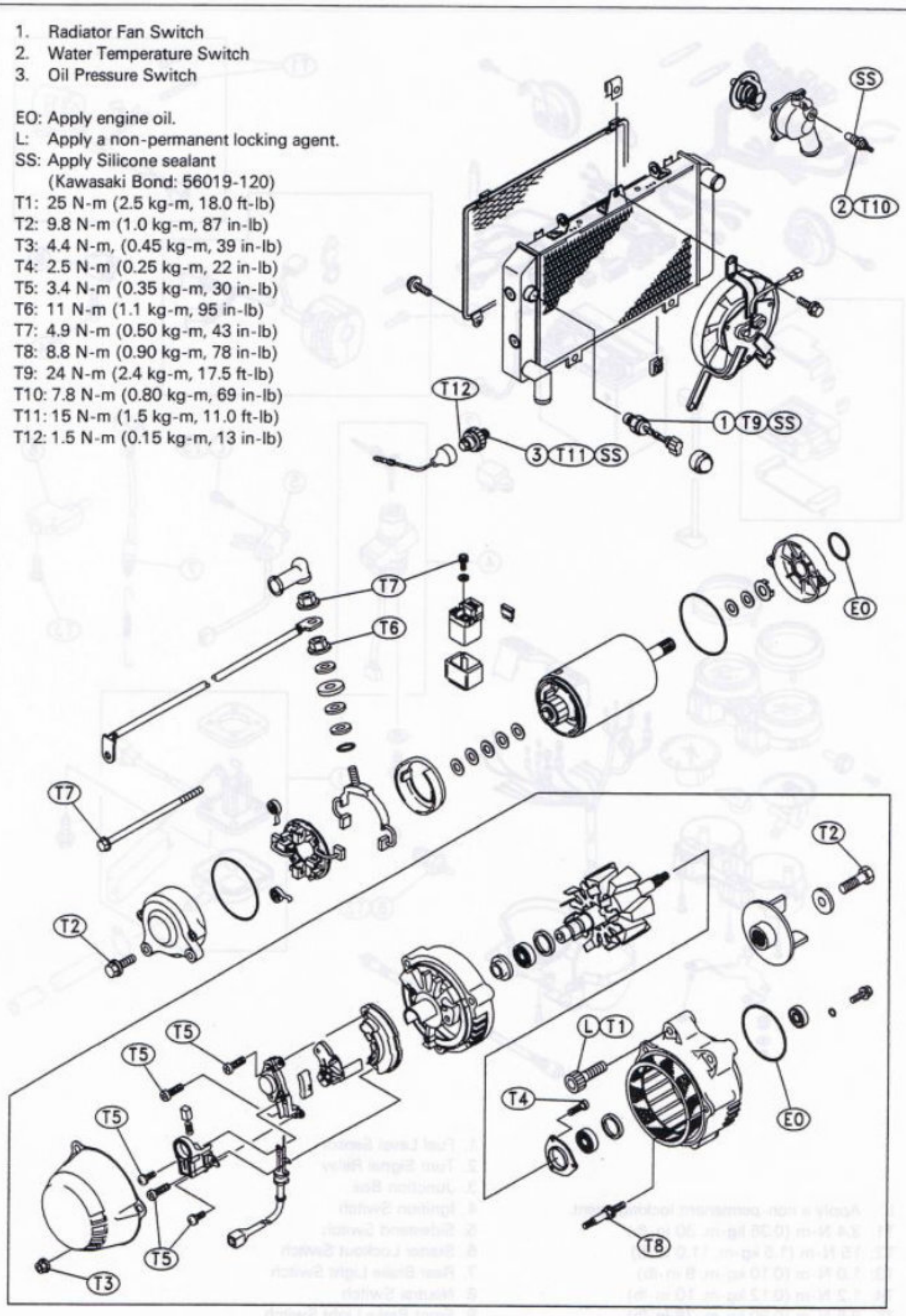

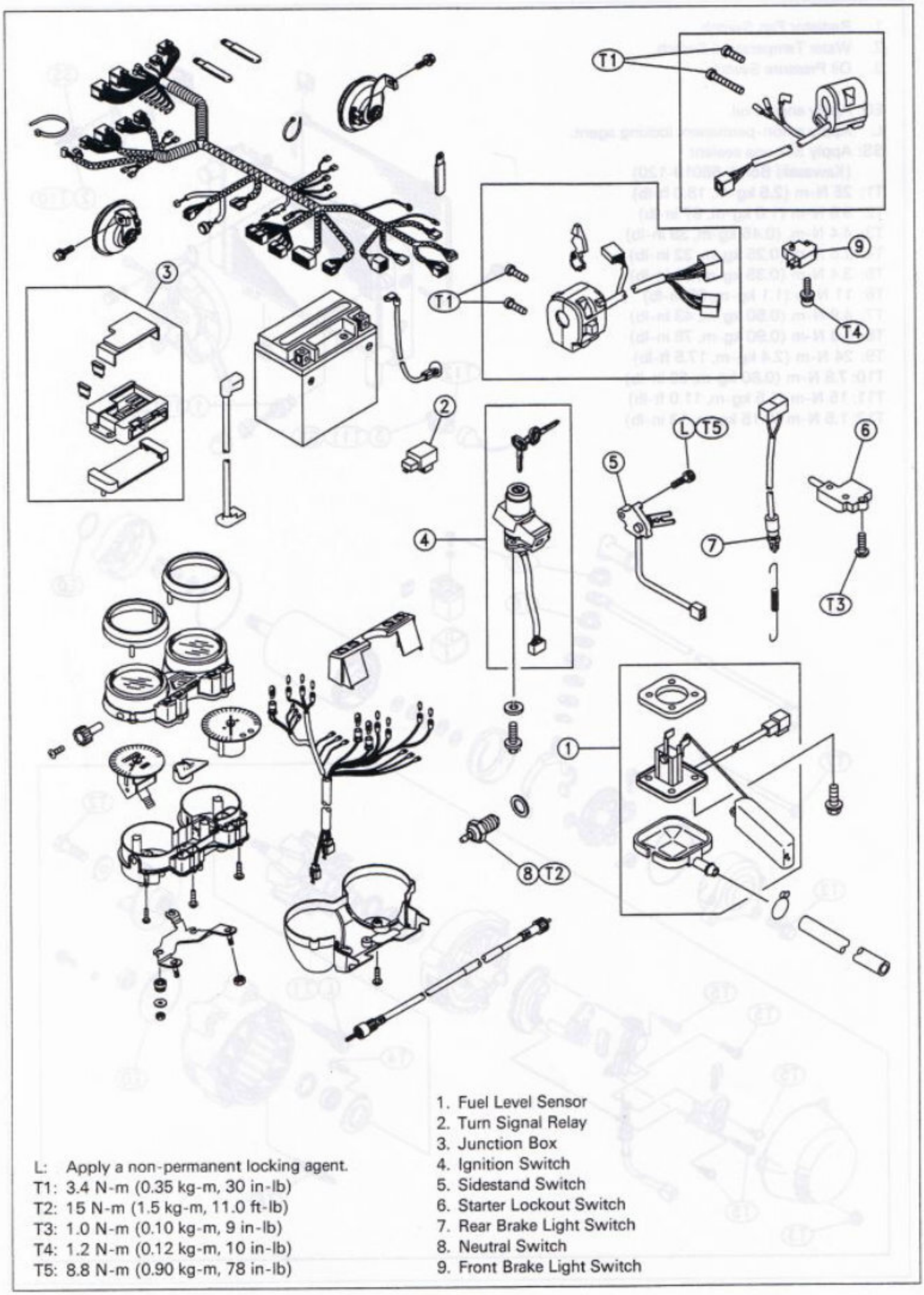

L: Apply a non-permanent locking agent.
T1: 3.4 N-m (0.35 kg-m, 30 in-lb)
T2: 15 N-m (1.5 kg-m, 11.0 ft-lb)
T3: 1.0 N-m (0.10 kg-m, 9 in-lb)
T4: 1.2 N-m (0.12 kg-m, 10 in-lb)
T5: 8.8 N-m (0.90 kg-m, 78 in-lb)

1. Fuel Level Sensor
2. Turn Signal Relay
3. Junction Box
4. Ignition Switch
5. Sidestand Switch
6. Starter Lockout Switch
7. Rear Brake Light Switch
8. Neutral Switch
9. Front Brake Light Switch

Specifications

Item	Standard	Service Limit
Battery:		
Type	MF (Maintenance Free) Battery	– – –
Capacity	12 V 12 Ah	– – –
Voltage	12.6 V or more	– – –
Alternator (Charging System):		
Type	Three-phase AC (built-in regulator/rectifier)	– – –
Charging voltage	14.2 ~ 14.8 V @ 4 000 r/min(rpm)	– – –
Stator coil resistance	1.0 Ω or less	– – –
Rotor coil resistance	2.3 ~ 3.5 Ω	– – –
Slip ring diameter	14.4 mm	14.0 mm
Carbon brush length	10.5 mm	4.5 mm
Ignition System:		
Pickup coil resistance	380 ~ 570 Ω	– – –
Ignition coil:		
3 needle arcing distance	6 mm or more	– – –
Primary winding resistance	2.3 ~ 3.5 Ω	– – –
Secondary winding resistance	12 ~ 18 kΩ	– – –
Spark plug:		
Type	NGK CR9EK or ND U27ETR	– – –
Gap	0.7 ~ 0.8 mm	– – –
IC igniter resistance	in the text	– – –
Electric Starter System:		
Starter motor:		
Brush length	12 mm	7 mm
Commutator diameter	28 mm	27 mm
Switch and Sensor:		
Rear brake light switch timing	ON after about 10 mm pedal travel	– – –
Engine oil pressure switch connections	When engine is stopped: ON	– – –
	When engine is running: OFF	– – –
Fan switch resistance:		
Rising temperature	From OFF to ON @ 95 ~ 101°C (203 ~ 214°F)	– – –
Falling temperature	From ON to OFF @ 90 ~ 96°C (194 ~ 205°F)	– – –
	ON: Less than 0.5 Ω OFF: More than 1 MΩ	
Water temperature switch resistance:		
Rising temperature	From OFF to ON @112 ~ 118°C (236 ~ 238 °F)	– – –
Falling temperature	From ON to OFF @108 ~ 111°C (227 ~ 234 °F)	– – –
Fuel level sensor resistance:		
Full position	4 ~ 10 Ω	– – –
Empty position	90 ~ 100 Ω	– – –
Throttle sensor output voltage:	When engine is idling: 0.9 ~ 1.1 V	– – –
	When gtip is fully opened: 4.06 ~ 4.26 V	– – –

Special Tools – **Bearing Driver Set: 57001-1129**
Hand Tester: 57001-1394
Spark Plug Wrench, Hex 16: 57001-1262
Igniter Checker Assembly: 57001-1378
Harness Adapter #13: 57001-1399
Throttle Sensor Setting Adapter: 57001-1400

Sealant – **Kawasaki Bond (Silicone Sealant): 56019-120**

Parts Location

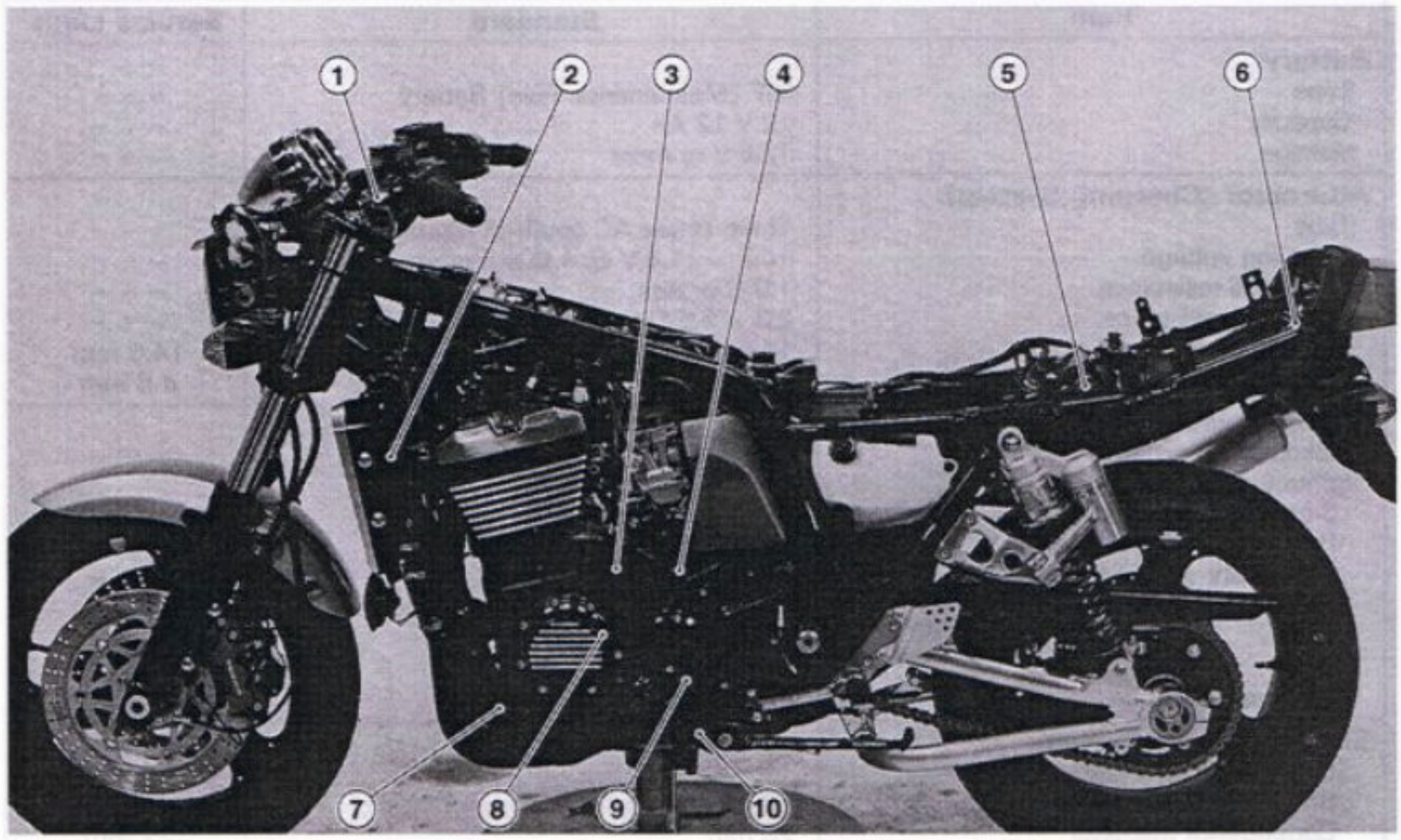

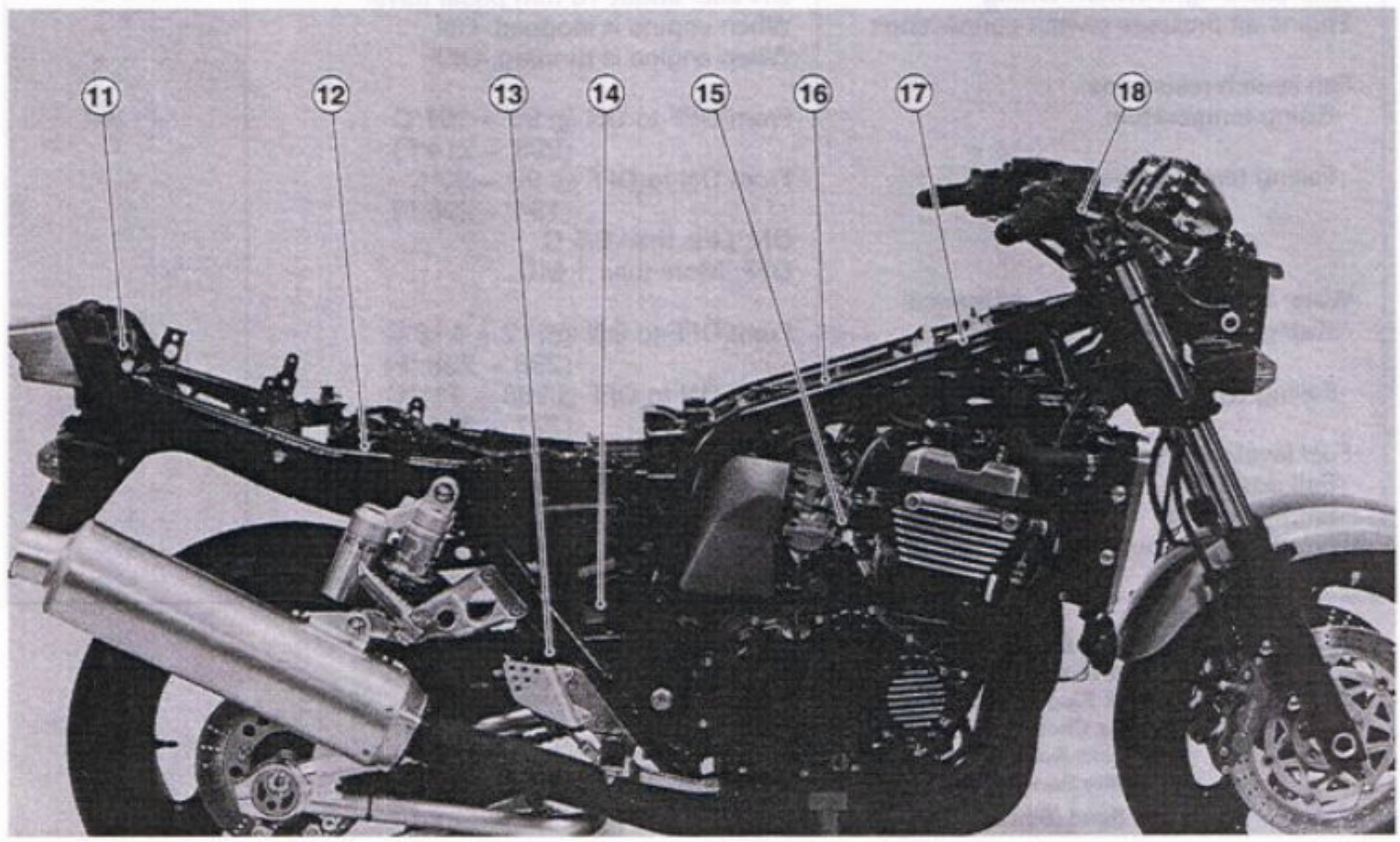

1. Starter Lockout Switch
2. Radiator Fan Switch
3. Alternator
4. Starter Motor
5. Junction Box
6. IC Igniter
7. Oil Pressure Switch
8. Pickup Coil
9. Neutral Switch
10. Sidestand Switch
11. Turn Signal Relay
12. Starter Relay and Main Fuse
13. Rear Brake Light Switch
14. Battery
15. Throttle Sensor
16. Ignition Coils
17. Water Temperature Switch
18. Front Brake Light Switch

Precautions

There are a number of important precautions that are musts when servicing electrical systems. Learn and observe all the rules below.

- Do not reverse the battery lead connections. This will burn out the diodes on the electrical parts.
- Always check battery condition before condemning other parts of an electrical system. A fully charged battery is a must for conducting accurate electrical system tests.
- The electrical parts should never be struck sharply, as with a hammer, or allowed to fall on a hard surface. Such a shock to the parts can damage them.
- To prevent damage to electrical parts, do not disconnect the battery leads or any other electrical connections when the ignition switch is on, or while the engine is running.
- Because of the large amount of current, never keep the starter button pushed when the starter motor will not turn over, or the current may burn out the starter motor windings.
- Do not use a meter illumination bulb rated for other than voltage or wattage specified in the wiring diagram, as the meter or gauge panel could be warped by excessive heat radiated from the bulb.
- Take care not to short the leads that are directly connected to the battery positive (+) terminal to the chassis ground.
- Troubles may involve one or in some cases all items.
  Never replace a defective part without determining what CAUSED the failure. If the failure was caused by some other item or items, they too must be repaired or replaced, or the new replacement will soon fail again.
- Make sure all connectors in the circuit are clean and tight, and examine wires for signs of burning, fraying, etc. Poor wires and bad connections will affect electrical system operation.
- Measure coil and winding resistance when the part is cold (at room temperature).
- Color Codes:

BK	Black	G	Green	P	Pink
BL	Blue	GY	Gray	PU	Purple
BR	Brown	LB	Light blue	R	Red
CH	Chocolate	LG	Light green	W	White
DG	Dark green	O	Orange	Y	Yellow

- Electrical Connectors

Female Connectors [A]

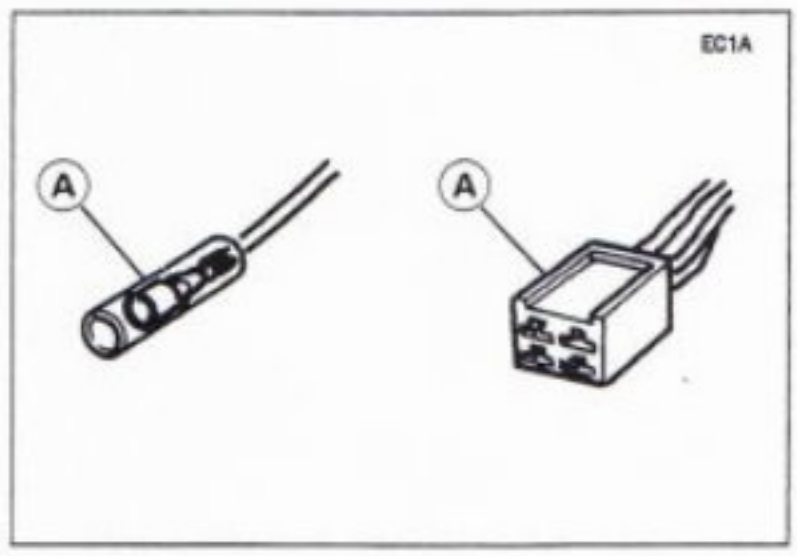

Male Connectors [B]

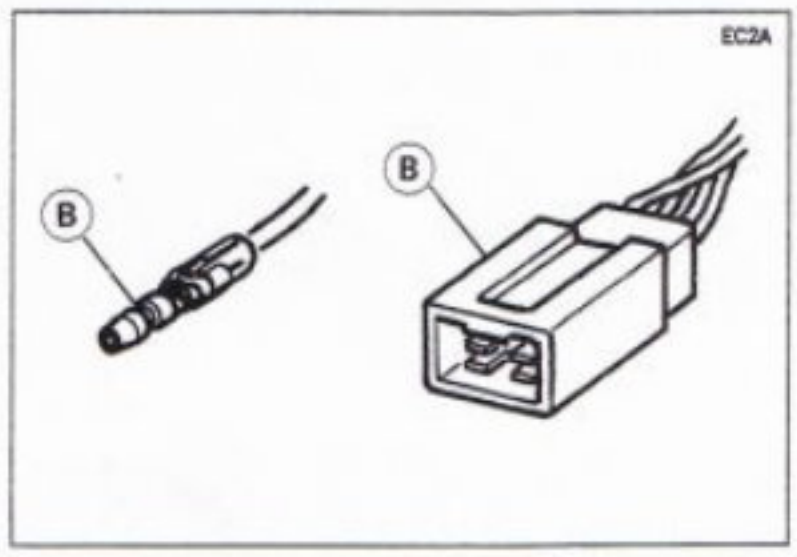

Electrical Wiring

Wiring Inspection

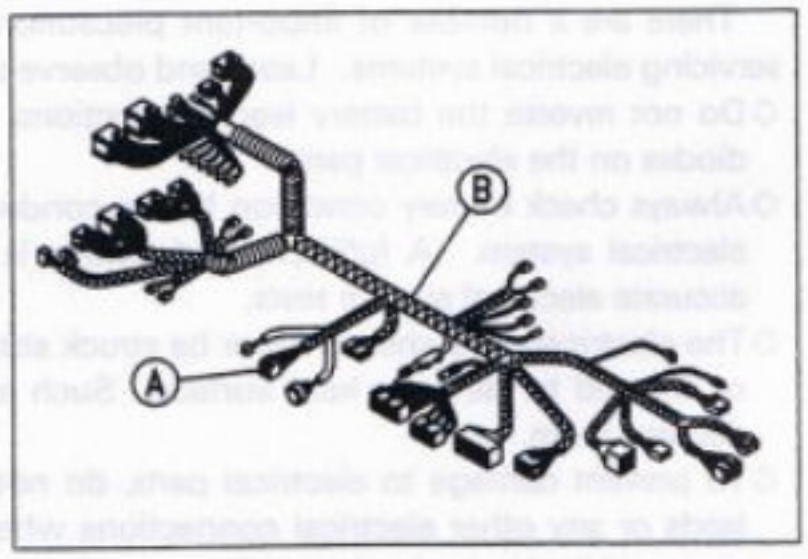

- ●Visually inspect the wiring for signs of burning, fraying, etc.
- ★If any wiring is poor, replace the damaged wiring.
- ●Pull each connector [A] apart and inspect it for corrosion, dirt, and damage.
- ★If the connector is corroded or dirty, clean it carefully. If it is damaged, replace it.
- ●Check the wiring for continuity.
- ○Use the wiring diagram to find the ends of the lead which is suspected of being a problem.
- ○Connect the hand tester between the ends of the leads.

Special Tool – Hand Tester: 57001-1394

- ○Set the tester to the x 1 Ω range, and read the tester.
- ★If the tester does not read 0 Ω, the lead is defective. Replace the lead or the wiring harness [B] if necessary.

Battery

Battery Removal

- Remove:
  Seat (see Frame Chapter)
  Battery Holder [A]

○ While pushing on the tab [B] at the upper end of the battery holder, pull the holder rearward to unlatch it, then pull it up.

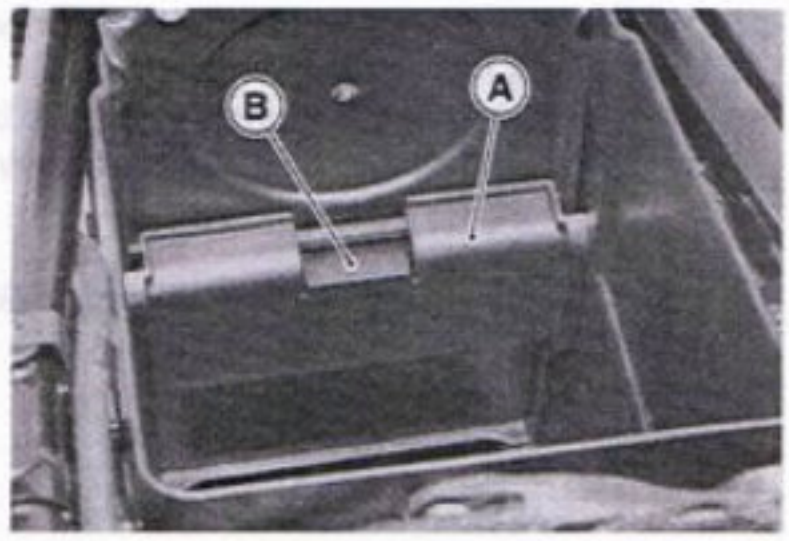

- Pull out the battery halfway.
- Disconnect the negative terminal lead [A] and then positive terminal lead [B].

CAUTION
Be sure to disconnect the negative terminal lead first.

- Remove the battery.

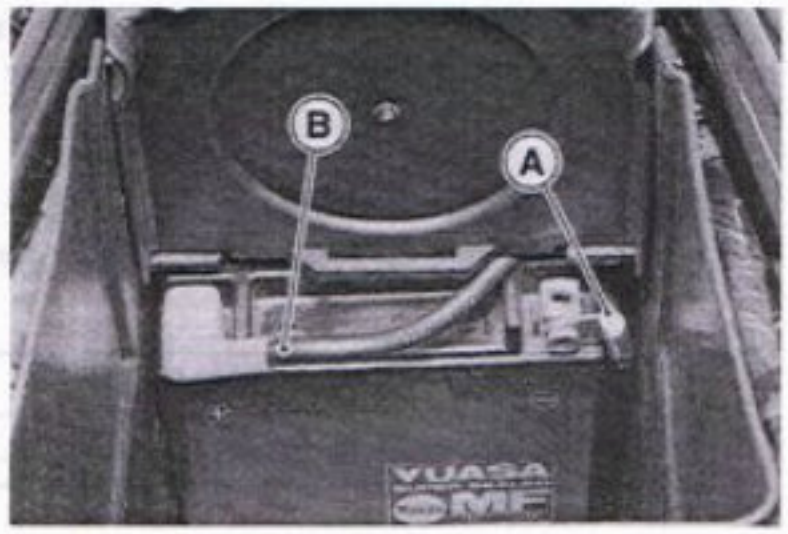

Electrolyte Filling

CAUTION
Do not remove the aluminum seal sheet sealing the filler ports until just before use. **Be sure to use the dedicated electrolyte container for correct electrolyte volume.**

- Check to see that there is no peeling, tears or holes in the sealing sheet.
- Place the battery on a level surface.
- Remove the sealing sheet [A].

○ When removing, check to hear an air-sucking sound "Shoosh!" from filler ports [B].

NOTE

○ *A battery whose sealing sheet has any peeling, tears, holes, or from which the air-sucking sound was not heard requires a refreshing charge (initial charge).*

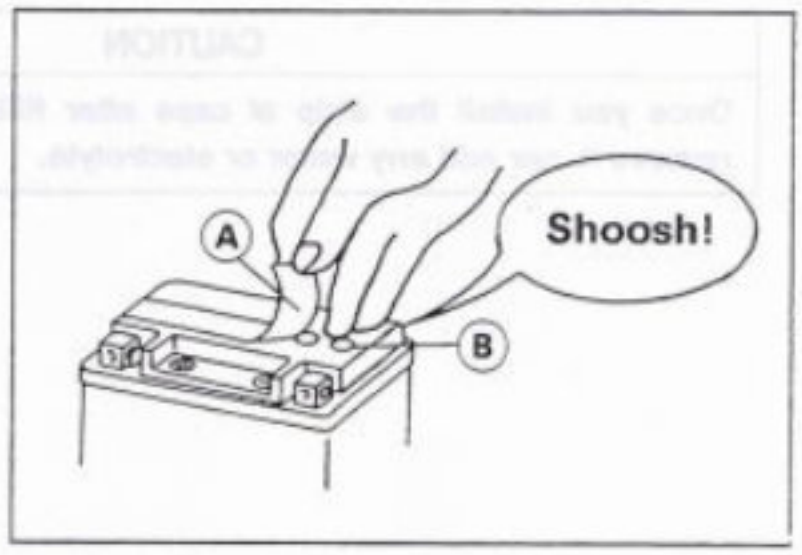

- Take the electrolyte container out of the vinyl bag.
- Detach the strip of caps [A] from the container.

NOTE

○ *Do not discard the strip of caps because it is used as the battery plugs later.*

○ *Do not peel back or pierce the sealed areas [B].*

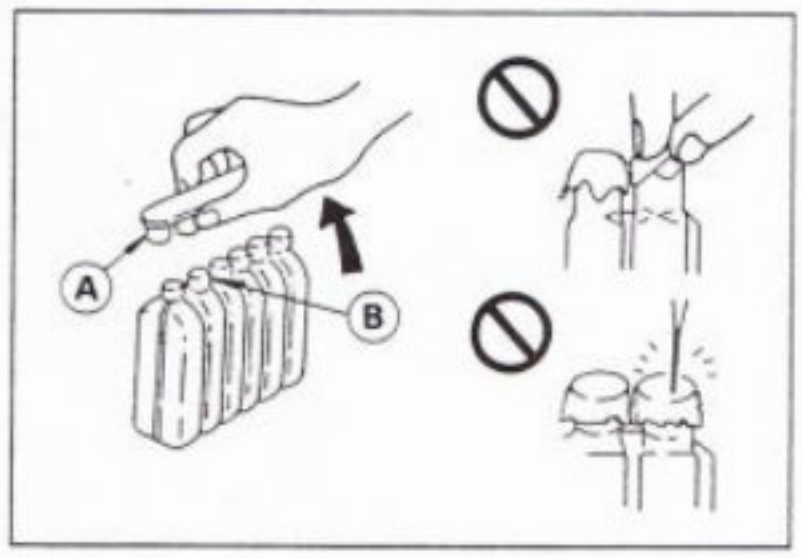

- Place the electrolyte container upside down with the six sealed areas in line with the six battery filler ports.
- Push the container down strongly enough to break the seals. Now the electrolyte should start to flow into the battery.

NOTE

○ *Do not tilt the container as the electrolyte flow may be interrupted.*

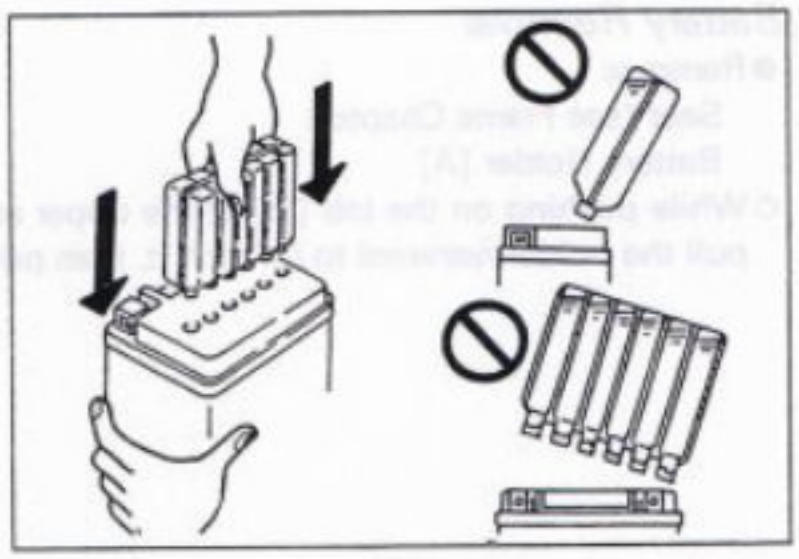

- Make sure air bubbles [A] are coming up from all six filler ports.

○ Leave the container this way for 5 minutes or longer.

NOTE

○ *If no air bubbles are coming up from a filler port, tap [B] the bottom of the bottle two or three times. Never remove the container from the battery.*

CAUTION
Fill until the container is completely emptied.

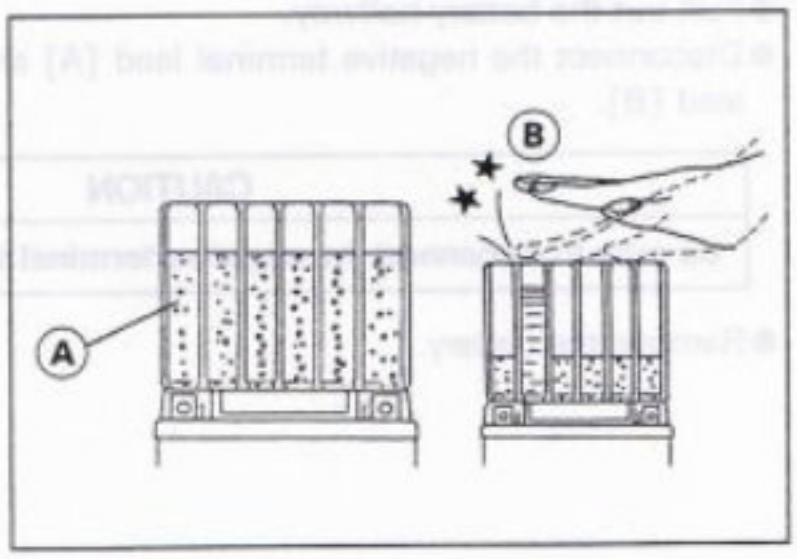

- Be certain that all the electrolyte has flowed out.
- Tap the bottom the same way as above if there is any electrolyte left in the container.
- Now pull the container gently out of the battery.
- Let the battery sit for **20** minutes. During this time, the electrolyte permeates the special separators and the gas generated by chemical reaction is released.
- Fit the strip of caps [A] tightly into the filler ports until the strip is at the same level as the top of the battery.

NOTE

○ *Do not hammer. Press down evenly with both hands.*

CAUTION
Once you install the strip of caps after filling the battery, never remove it, nor add any water or electrolyte.

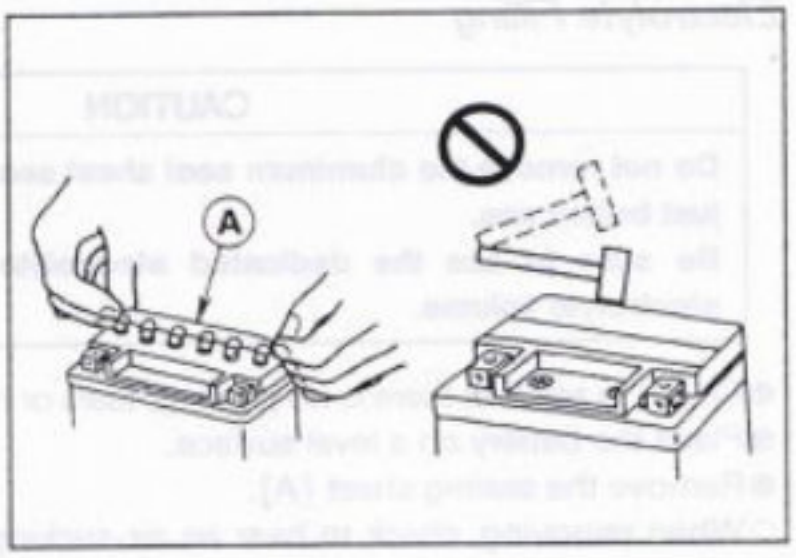

Initial Charge

While a maintenance free battery can be used after only filling with electrolyte, a battery may not be able to sufficiently move a starter motor to start an engine in the cases shown in the table below, where an initial charge is required before use. However, if a battery shows a terminal voltage of higher than 12.5 V after 10 minutes of filling (Note 1), no initial charge is necessary.

Condition requiring initial charge	Charging method
At low temperatures (lower than 0°C)	1.4 A × 2 ~ 3 hours
Battery has been stored in high temperature and humidity.	1.4 A × 15 ~ 20 hours
Seal has been removed, or broken – peeling, tear or hole. (If you did not hear the air-sucking sound "Shoosh!" as you removed the seal.)	
Battery as old as 2 years or more after manufacture. Battery manufacturing date is printed on battery top. Example) 12 (Day) 10 (Month) 93 (Year) T1 (Mfg. location)	

Note 1 : Terminal voltage – To measure battery terminal voltage, use a digital voltmeter.

Precautions

1) No need of topping-up
   No topping-up is necessary in this battery until it ends its life under normal use. Forcibly prying off the sealing plug to add water is very dangerous. Never do that.
2) Refreshing charge
   If an engine will not start, a horn sounds weak, or lamps are dim, it indicates the battery has been discharged. Give refresh charge for 5 to 10 hours with charge current shown in the specification (see the Electrical System chapter).
   When a fast charge is inevitably required, do it following precisely the maximum charge current and time conditions indicated on the battery.

CAUTION

This battery is designed to sustain no unusual deterioration if refresh-charged according to the method specified above. However, the battery's performance may be reduced noticeably if charged under conditions other than given above.
Never remove the sealing plug during refresh charge.
If by chance an excessive amount of gas is generated due to overcharging, the safety valve operates to keep the battery safe.

3) When you do not use the motorcycle for months
   Give a refresh charge before you store the motorcycle and store it with the negative lead removed. Give a refresh charge every month during storage.
4) Battery life
   If the battery will not start the engine even after several refresh charges, the battery has exceeded its useful life. Replace it. (Provided, however, the vehicle's starting system has no problem.)

⚠WARNING

Keep the battery away from sparks and open flames during charging, since the battery gives off an explosive gas mixture of hydrogen and oxygen. When using a battery charger, connect the battery to the charger before turning on the charger. This procedure prevents sparks at the battery terminals which could ignite any battery gases.
No fire should be drawn near the battery, or no terminals should have the tightening loosened.
The electrolyte contains sulfuric acid. Be careful not to have it touch your skin or eyes. If touched, wash it off with liberal amount of water. Get medical attention if severe.

Interchange

A maintenance free battery can fully display its performance only when combined with a proper vehicle electric system. Therefore, replace a maintenance free battery only on a motorcycle which was originally equipped with a maintenance free battery.

Be careful, if a maintenance free battery is installed on a motorcycle which had an ordinary battery as original equipment, the maintenance free battery's life will be shortened.

Charging Condition Inspection

Battery charging condition can be checked by measuring battery terminal voltage.

- Remove the battery (see Battery Removal).
- Measure the battery terminal voltage.

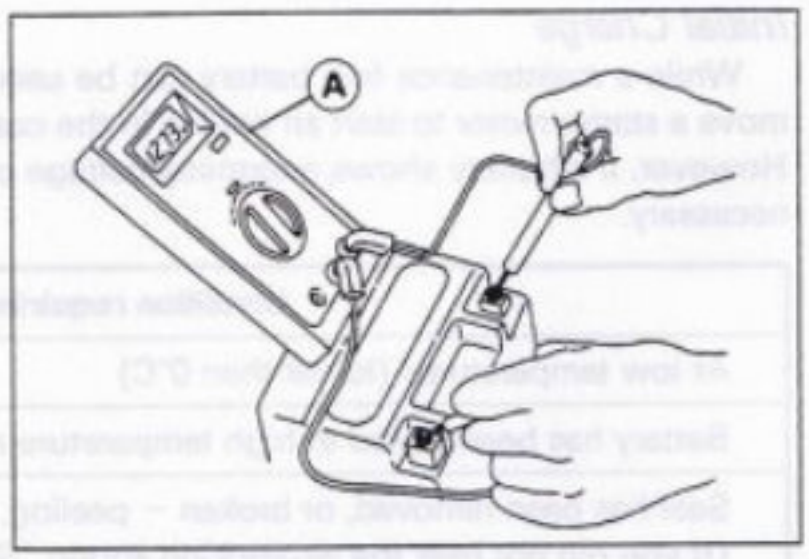

NOTE

○ *Measure with a digital voltmeter [A] which can be read one decimal place voltage.*

★If the reading is below the specified, refreshing charge is required.

Battery Terminal Voltage
Standard: 12.6 V or more

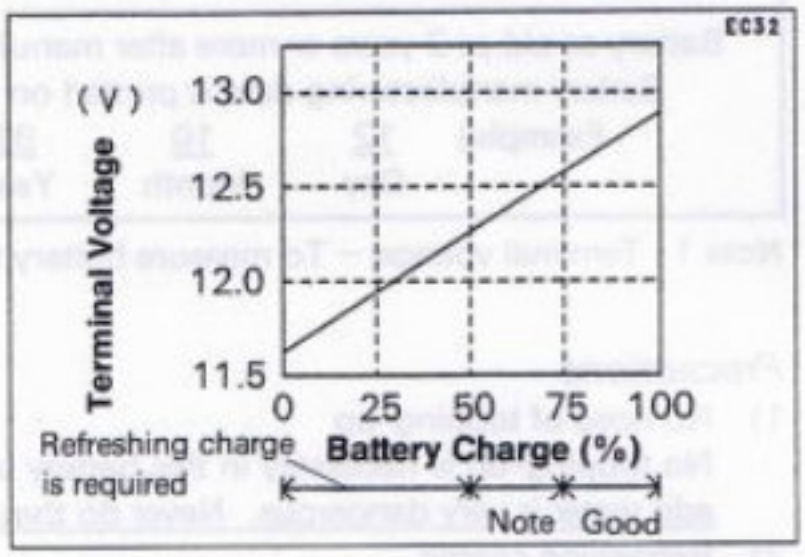

Refreshing Charge

- Remove the battery [A] (see Battery Removal).
- Refresh-charge by following method according to the battery terminal voltage.

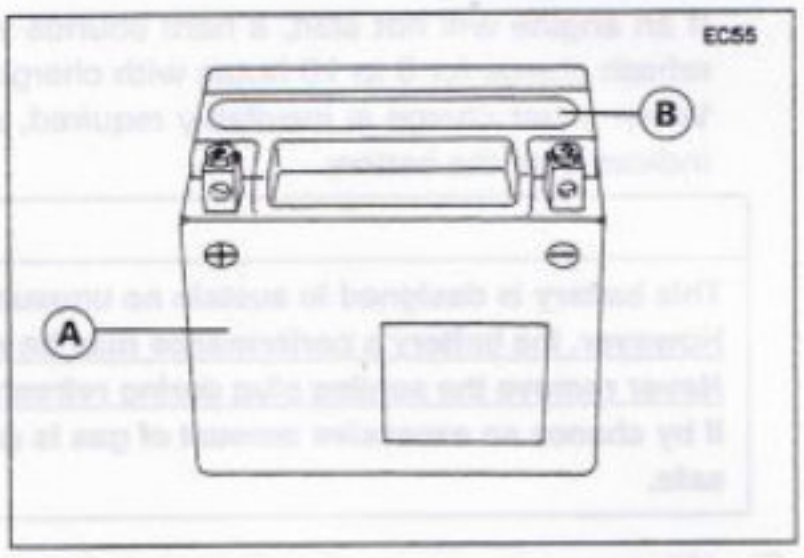

⚠WARNING

This battery is sealed type. Never remove sealing caps [B] even at charging. Never add water. Charge with current and time as stated below.

Terminal Voltage: 11.5 ~ less than 12.6 V
Standard Charge
1.4 A x 5 ~ 10 h (see following chart)
Quick Charge
6.0 A x 1.0 h

CAUTION

If possible, do not quick charge. If the quick charge is done due to unavoidable circumstances, do standard charge later on.

Terminal Voltage : less than 11.5 V
Charging Method : 1.4 A x 20 h

NOTE

○ *Raise the voltage initially (25 V as maximum), and charge for about 5 minutes as a yardstick. If ammeter shows no change in current after 5 minutes, you need a new battery. The current, if it can flow into the battery, tends to become excessive. Adjust the voltage as often as possible to keep the current at standard value (1.4 A).*

Battery [A]
Battery Charger [B]
Standard Value [C]

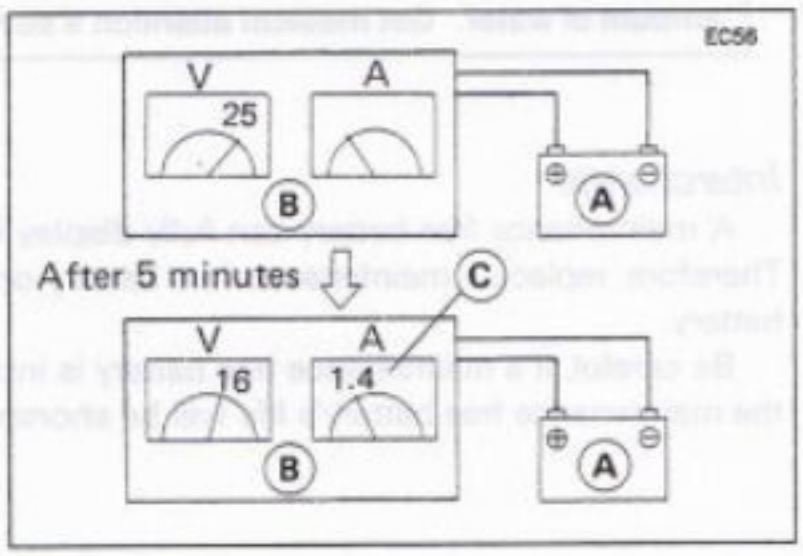

Battery Standard Charge Time Chart

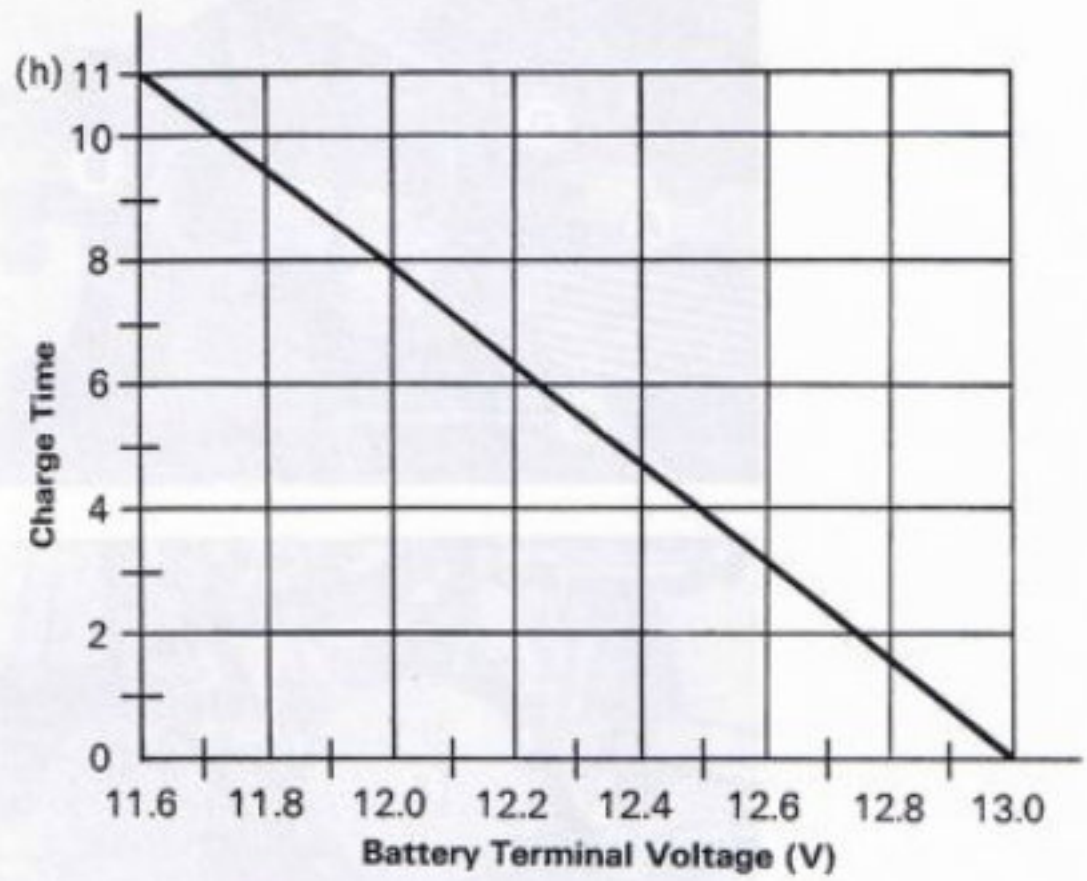

● Determine battery condition after refreshing charge.

○ Determine the condition of the battery 30 minutes after completion of the charge by measuring the terminal voltage according to the table below.

Criteria	Judgement
12.6 V or higher	Good
12.0 ~ 12.6 V or lower	Charge insufficient → Recharge.
12.0 V or lower	Unserviceable → Replace

Alternator

Alternator Removal

- Remove:
  Fuel Tank (see Fuel System chapter)
  Coolant (drain)
  Coolant Valve Hose [A]
  Engine Sprocket Cover
  Air Cleaner Left Side Cover [B]
  Air Cleaner Drain Hose [C]
  Alternator Lead Connector [D]

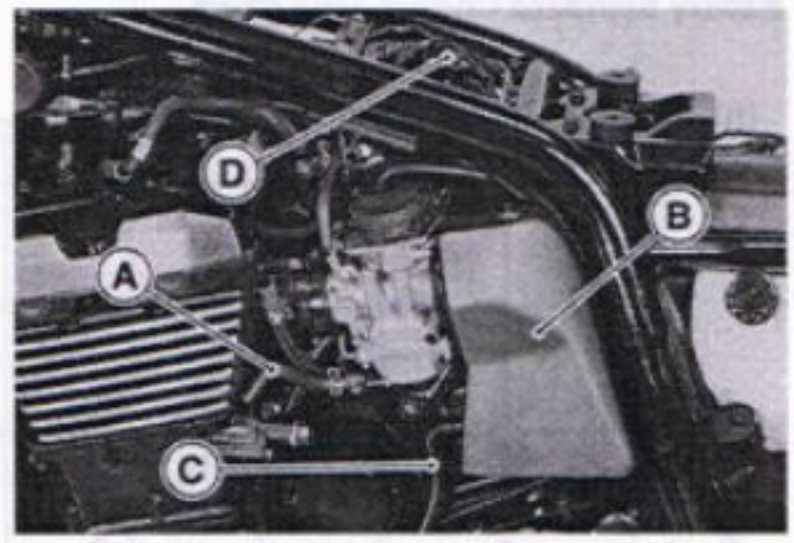

- Remove the alternator mounting bolts [A].
- Remove the alternator.

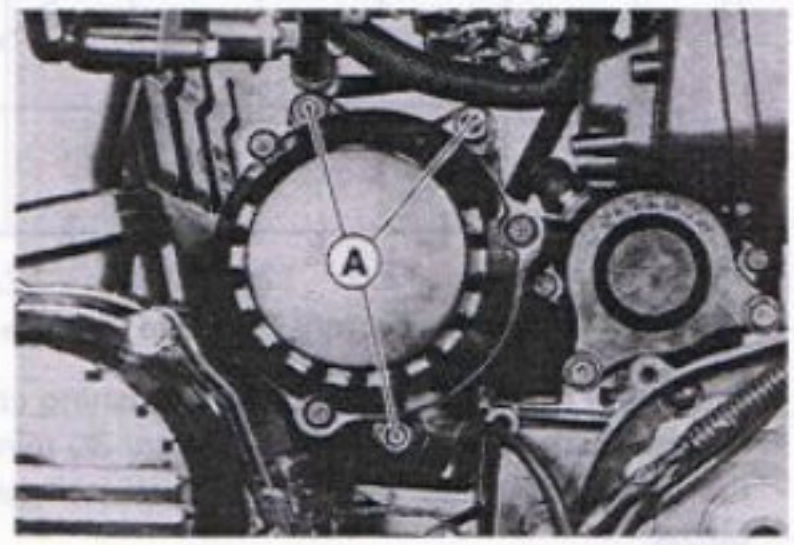

Alternator Installation

- Replace the O-ring [A] with the new one and apply a small amount of engine oil to the O-ring.
- Clean the alternator legs and crankcase where the alternator is grounded [B].
- Apply a non-permanent locking agent to the threads of the alternator mounting bolts.
- Tighten the alternator mounting bolts.

Torque – Alternator Mounting Bolts: 25 N-m(2.5 kg-m, 18.0 ft-lb)

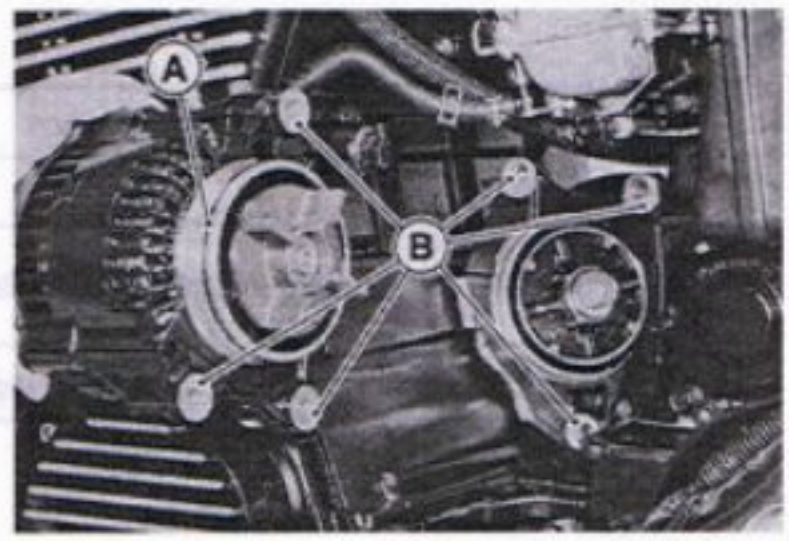

Alternator Disassembly

- Remove the alternator (see this chapter).
- Remove:
  Alternator Cover [A] and Nuts [B]

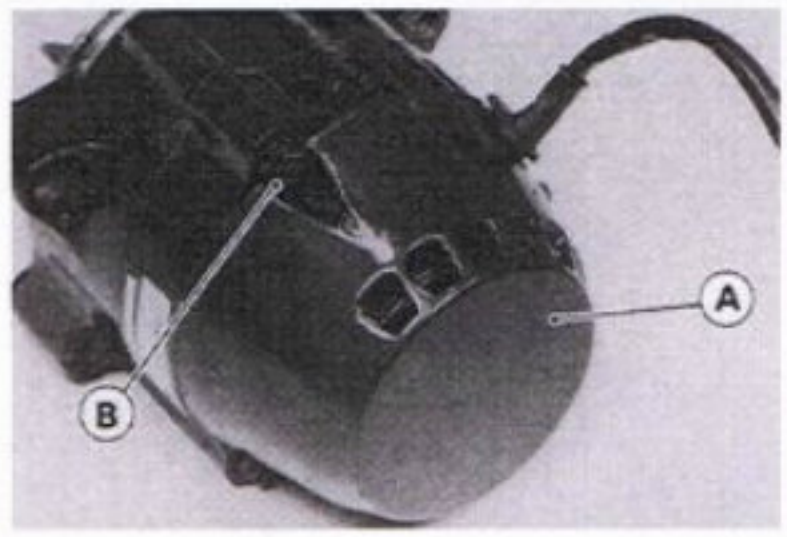

- Remove:
  Brush Assembly [A]
  Rectifier [B]
  Regulator [C]
- ○ Unsolder the leads [D] on the rectifier.

CAUTION
When unsoldering the alternator leads on the rectifier terminals, do it quickly. If high temperatures are applied for more than a few seconds, the rectifier's diodes may be damaged.

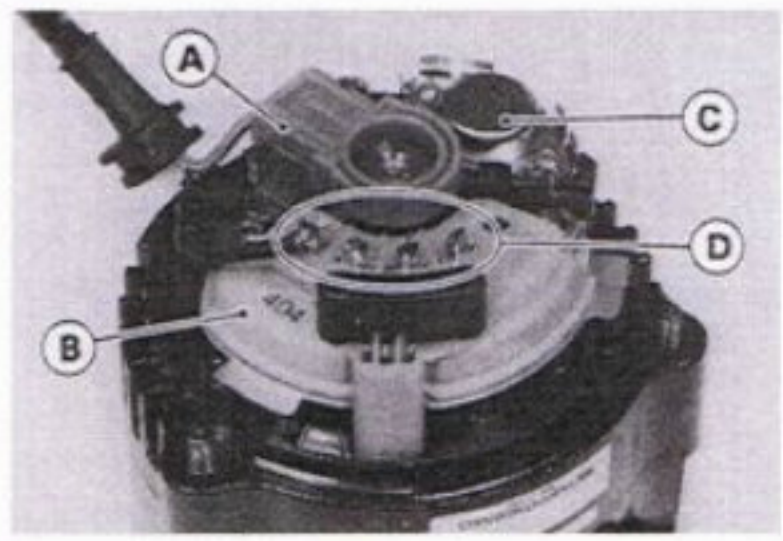

- If it is necessary to remove the carbon brush, unsolder the brush lead [A].

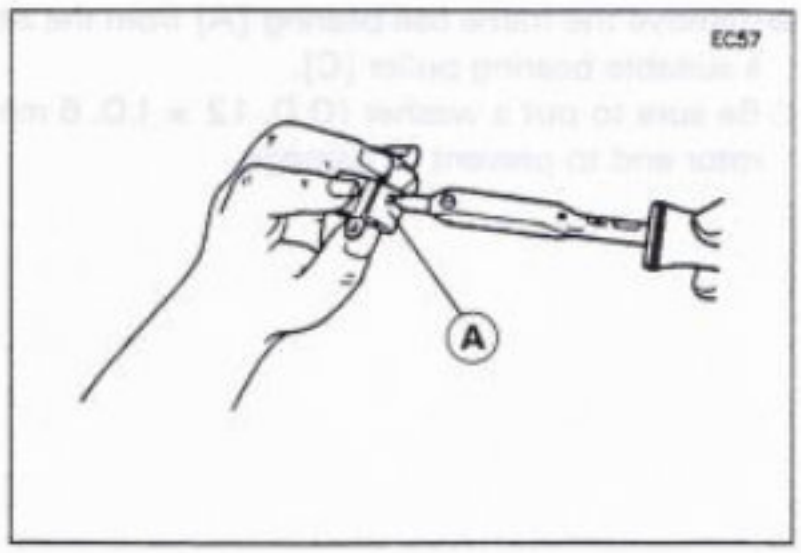

- Remove the alternator coupling to disassemble the rest of the parts as follows.
  - Hold the alternator with a vise.
  - Remove the coupling bolt[A] and coupling [B].

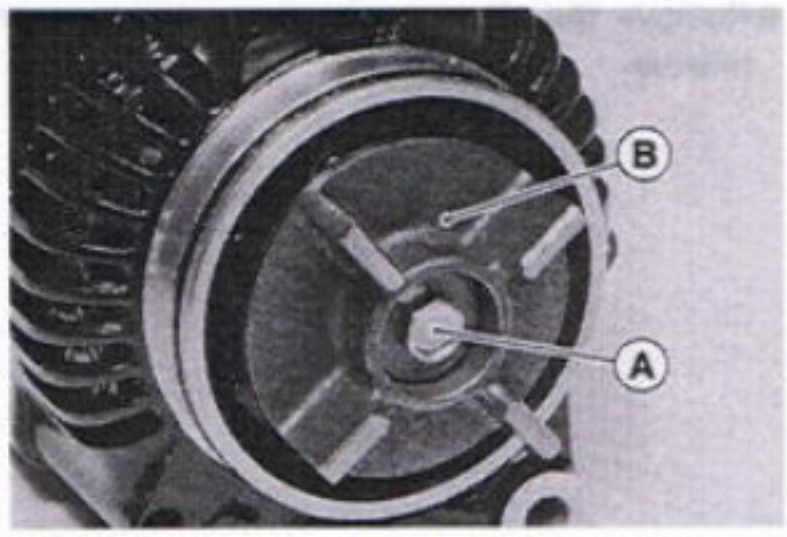

- Do not remove the alternator bearing retainer screws [A] yet.

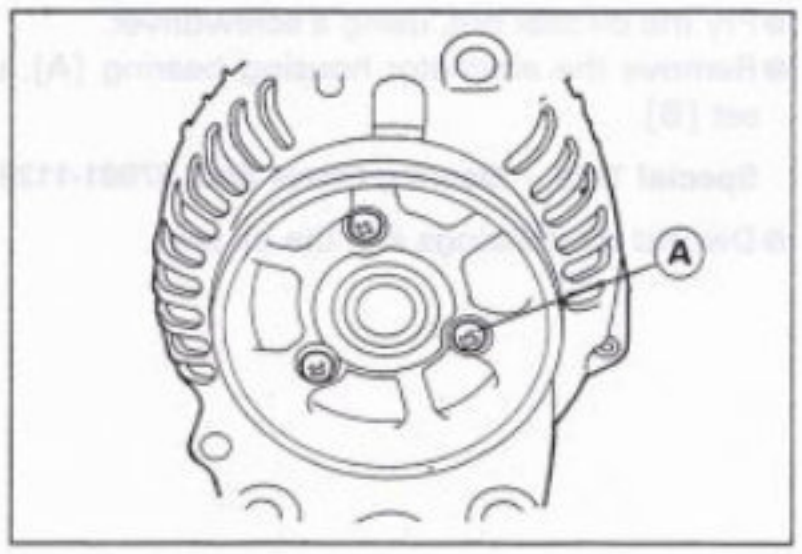

- Separate the alternator frame [A] from the alternator housing [B].

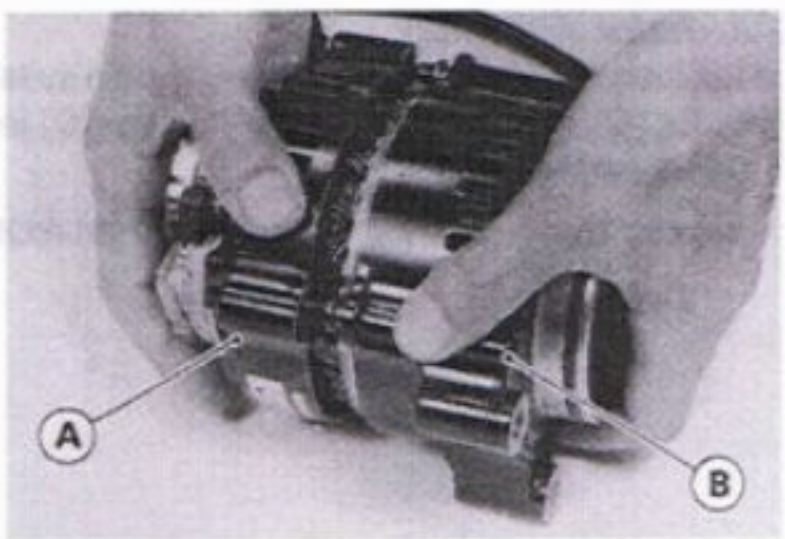

- Press out the alternator rotor [A] from the alternator frame [B].

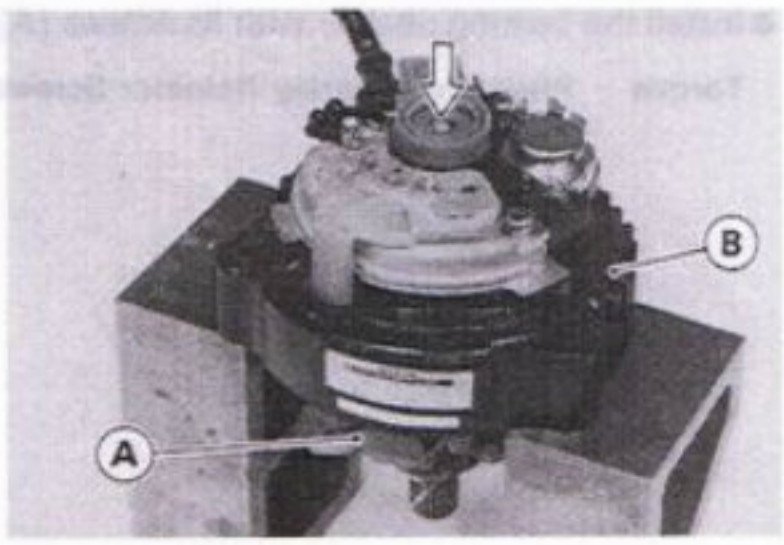

- Remove the frame ball bearing [A] from the alternator rotor [B], using a suitable bearing puller [C].
- ○ Be sure to put a washer (O.D. 12 × I.D. 6 mm) [D] on the alternator rotor end to prevent its damage.

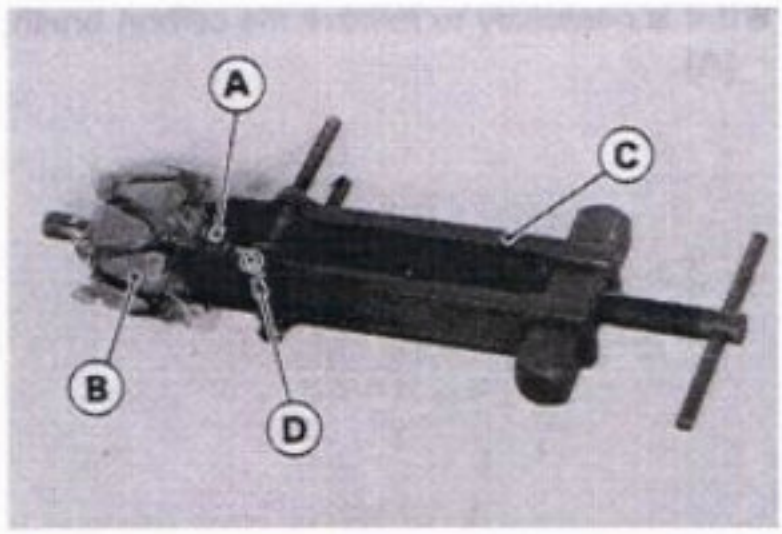

- Remove the alternator bearing retainer screws [A] and the bearing retainer.

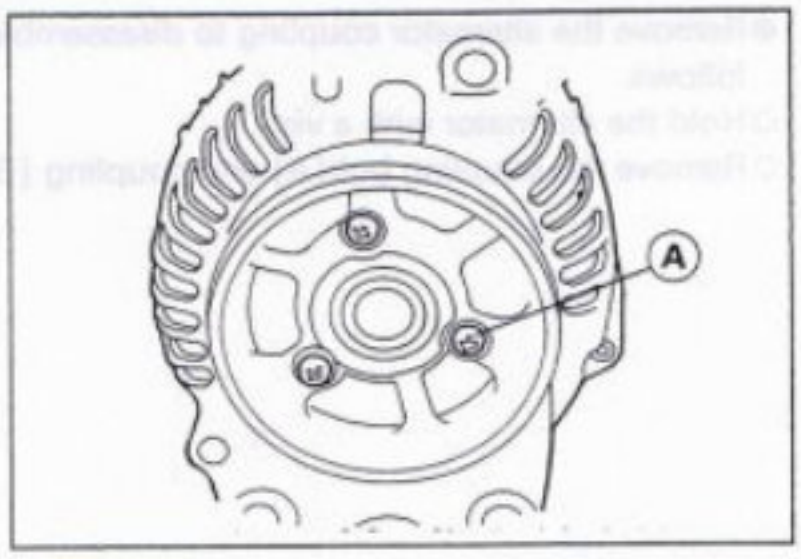

- Pry the oil seal out, using a screwdriver.
- Remove the alternator housing bearing [A], using the bearing driver set [B].

Special Tool – Bearing Driver Set: 57001-1129

- Discard the bearings and the oil seal.

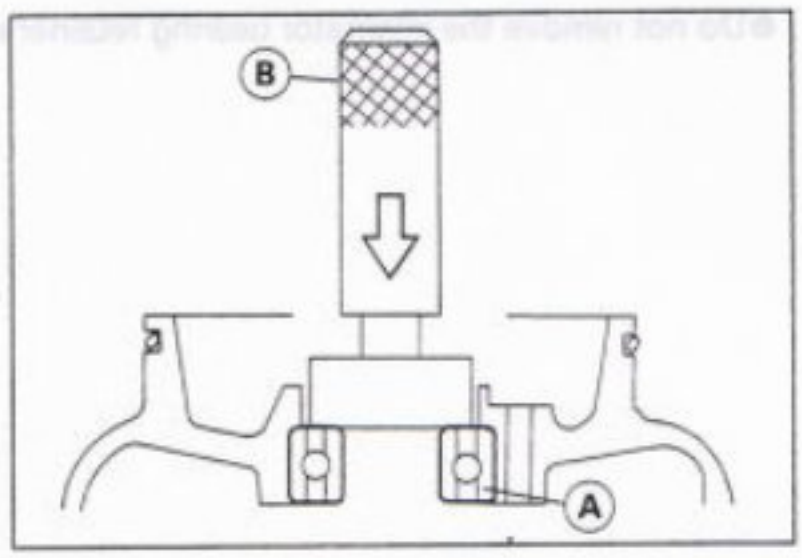

Alternator Assembly

- Position the alternator housing [A] on a suitable press fixture [B].
- Press [C] the new housing ball bearing [D] into the alternator housing with bearing driver set.

Special Tool – Bearing Driver Set: 57001-1129

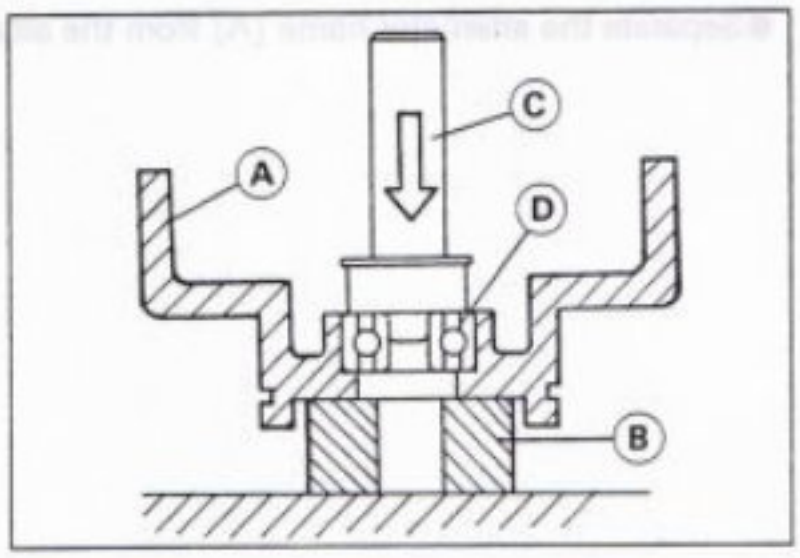

- Install the bearing retainer with its screws [A].

Torque – Alternator Bearing Retainer Screws: 2.5 N-m (0.25 kg-m, 22 in-lb)

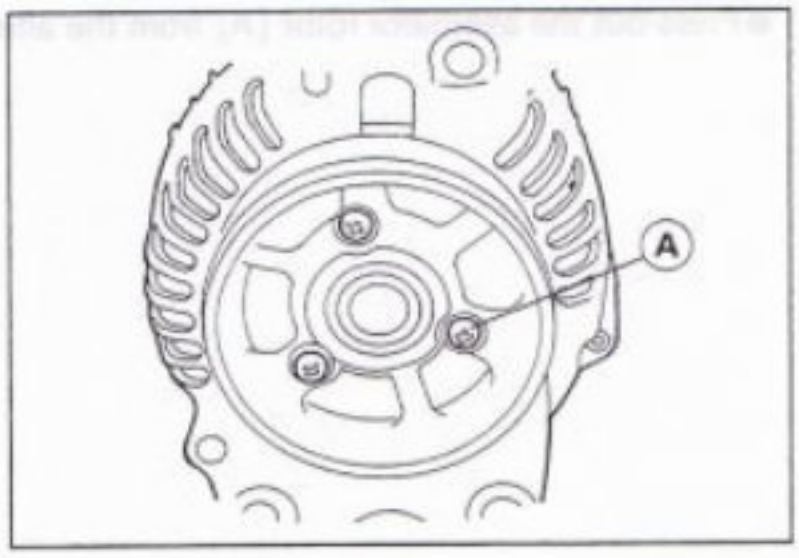

- Position the housing ball bearing [A] so that the inner race is seated on a suitable press fixture [B].
- Press [C] the alternator rotor [D] into the housing ball bearing.

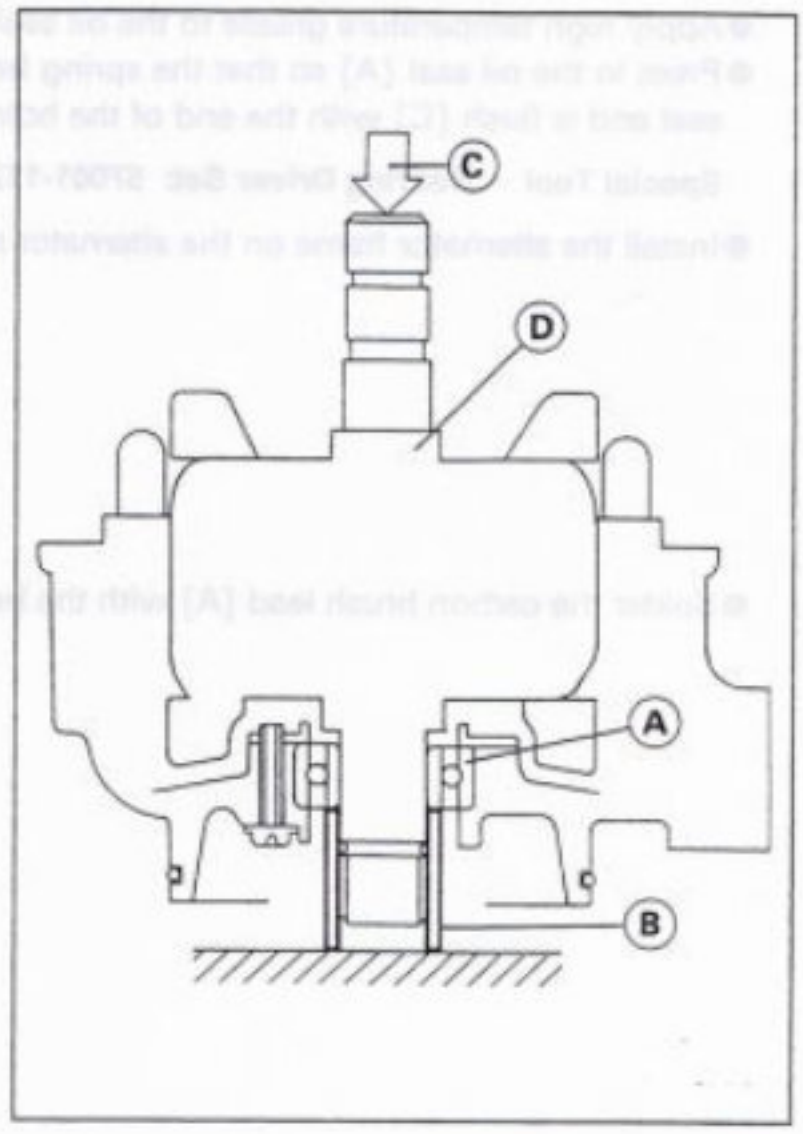

- Press the new frame ball bearing [A] and bearing covers [B] onto the rotor shaft. The wider band [C] on the outer race goes up.

  Ring [D]
  Alternator Housing [E]
  Press Fixture [F]

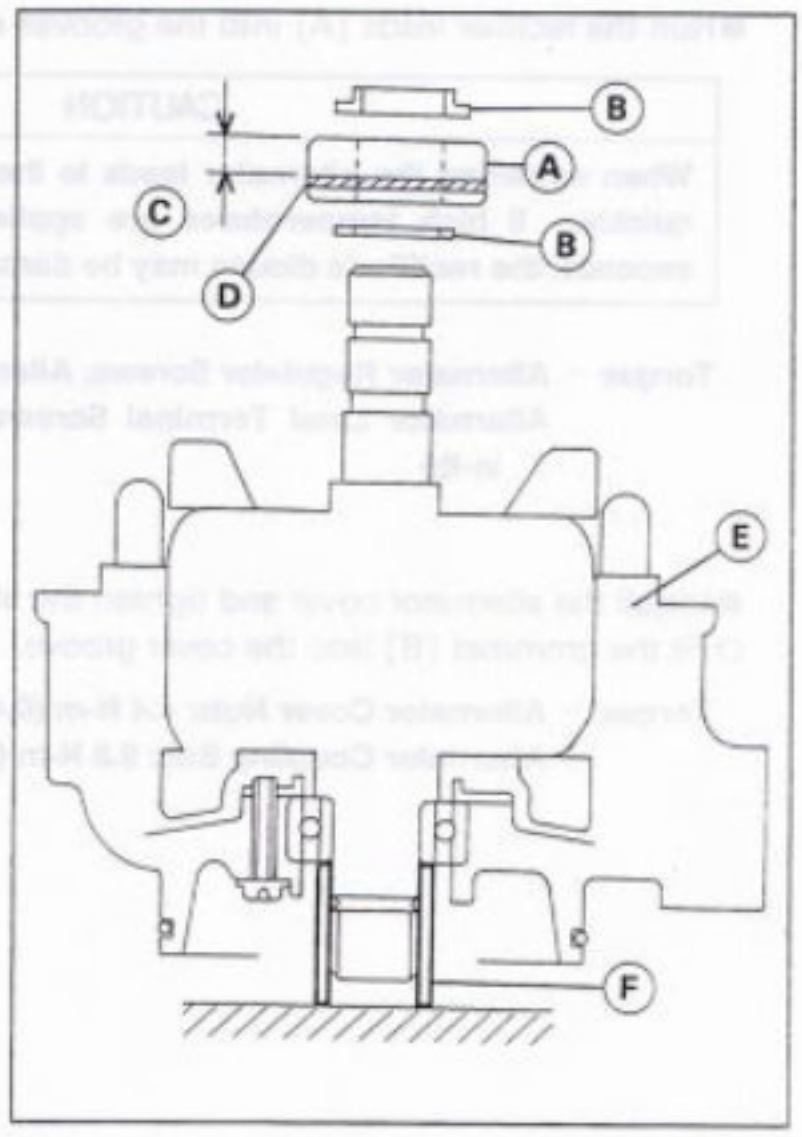

- Position the frame ball bearing ring [A] so that the ring projection [B] almost aligns with the groove chamfer [C] where the groove is the deepest. This eases alternator frame installation.
  Eccentric Ring Groove [D]

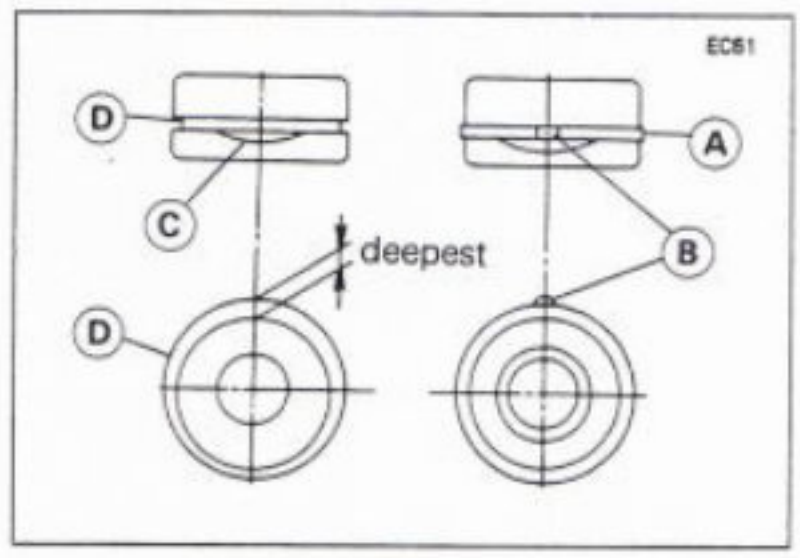

- Apply high temperature grease to the oil seal lips.
- Press in the oil seal [A] so that the spring band [B] faces out and the seal end is flush [C] with the end of the hole.

  Special Tool – Bearing Driver Set: 57001-1129 [D]
- Install the alternator frame on the alternator rotor.

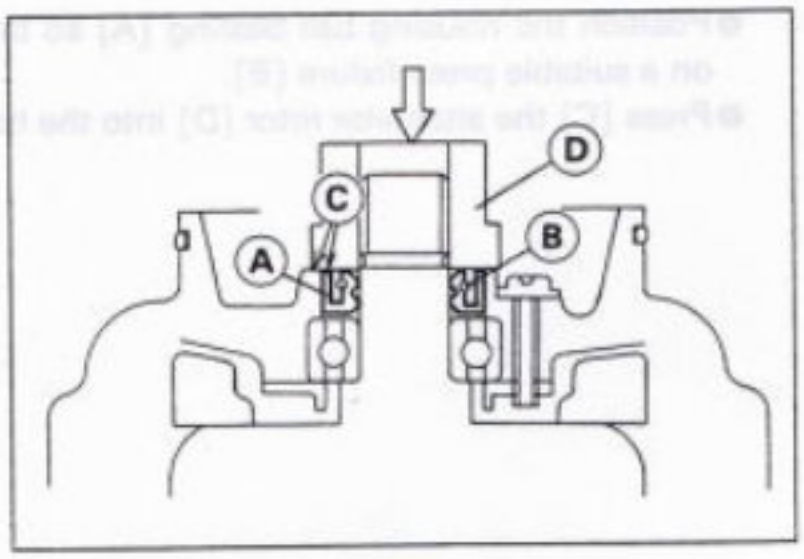

- Solder the carbon brush lead [A] with the brush holder [B] as shown.

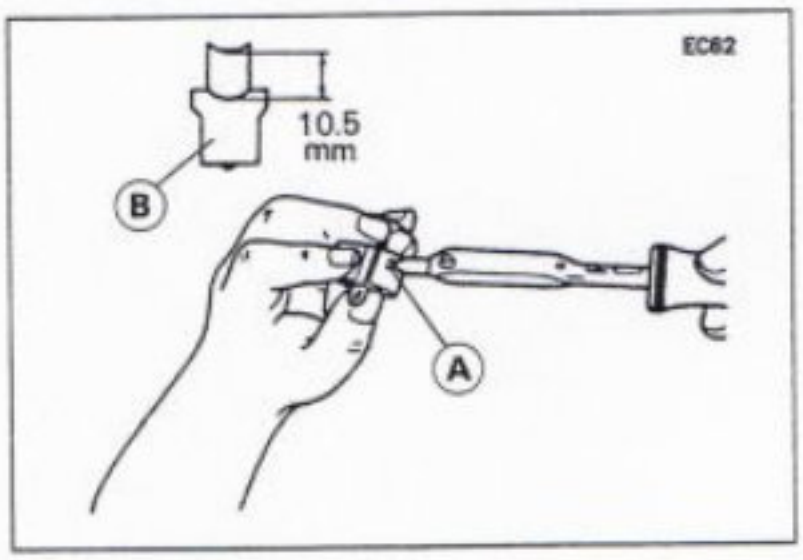

- Run the rectifier leads [A] into the grooves as shown.

CAUTION
When soldering the alternator leads to the rectifier terminals, do it quickly. If high temperatures are applied for more than a few seconds, the rectifier's diodes may be damaged.

Torque – Alternator Regulator Screws, Alternator Brush Screws, Alternator Lead Terminal Screws: 3.4 N-m (0.35 kg-m, 30 in-lb)

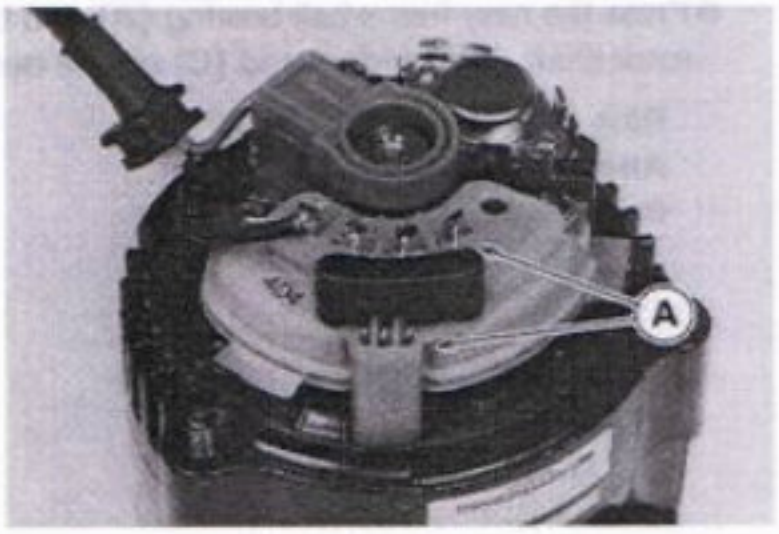

- Install the alternator cover and tighten the alternator cover nuts [A].
  - Fit the grommet [B] into the cover groove.

Torque – Alternator Cover Nuts: 4.4 N-m (0.45 kg-m, 39 in-lb)
Alternator Coupling Bolt: 9.8 N-m (1.0 kg-m, 87 in-lb)

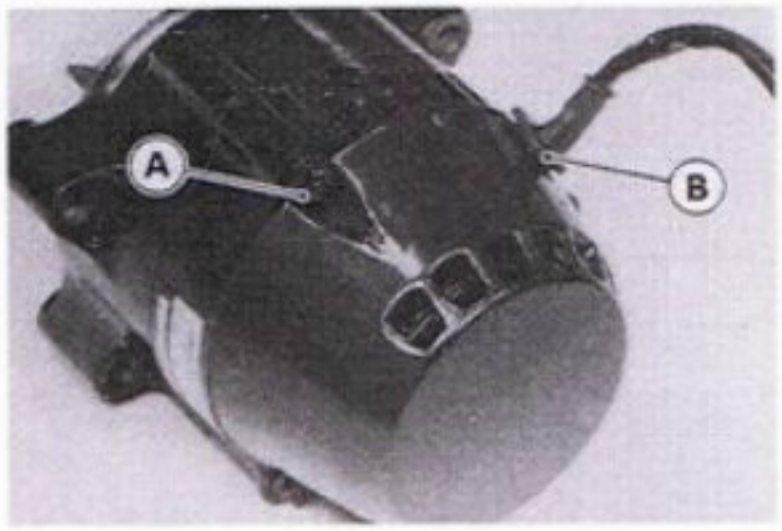

Operational Inspection

For any charging system problems, always check the charging system wiring first (see Wiring Inspection), and then check the system with the following tests shown in the troubleshooting guide.

Troubleshooting Guide

Test No.	Trouble	Symptoms
1	Battery discharged	Starter not rotating
2	Battery overcharged	Electrolyte level lowering quickly
3	Noise	Alternator or alternator chain noise

Test No. 1-Battery Discharged

- Remove the alternator cover nuts [A], and take off the cover [B].
- Check that the alternator leads and connectors are in good condition.

★If not, repair or replace the damaged parts.

- Replace the discharged battery with a good battery.

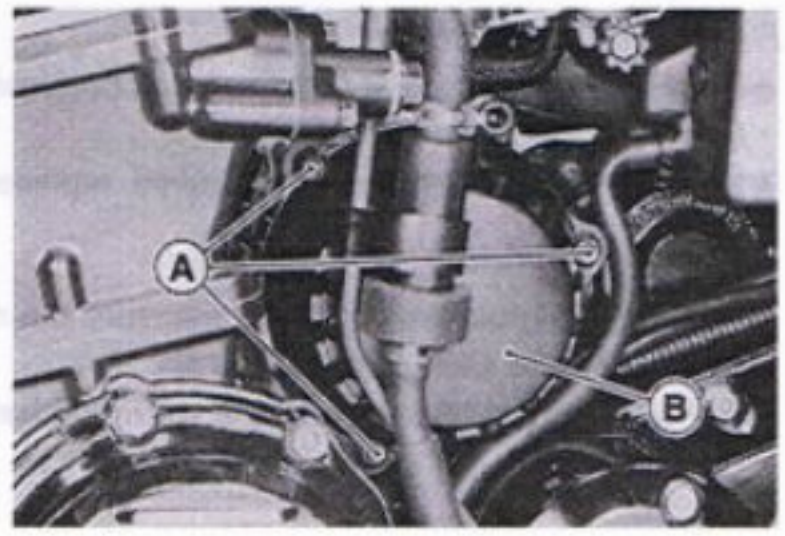

- Connect the hand tester [A] to the battery leads as shown.
  Starter Relay [B] Battery Negative Terminal [C]
- Check charging voltage with the engine running.

★If the charging voltage is higher than 13.5 V, the charging system is in good condition.

★If the charging voltage is lower than 13.5 V, go to the next test.

Charging Voltage 14.2 ~ 14.8 V @4000 r/min(rpm)

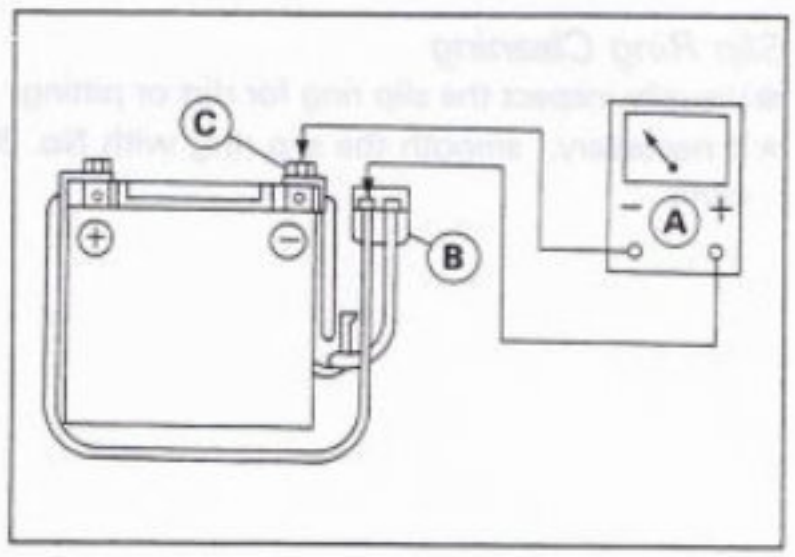

- Ground the F terminal [A] of the regulator to the engine with an auxiliary wire.
- Start the engine, and check the charging voltage with the engine running.

★If the charging voltage is higher than 13.5 V, check the regulator.

★If the charging voltage is lower than 13.5 V, check the following.
  Stator Coil
  Rotor Coil
  Slip Rings
  Carbon Brushes
  Rectifier

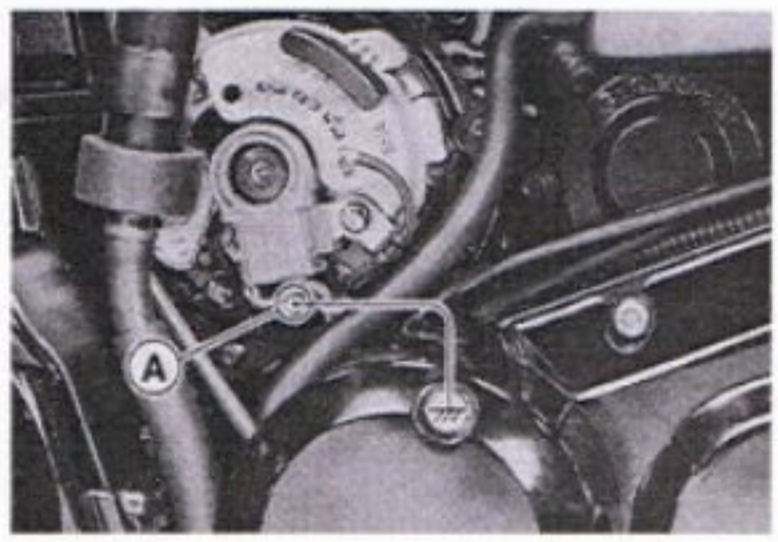

Test No. 2-Battery Overcharged

- Check the regulator and/or rotor.

★Repair or replace the damaged parts.

Test No. 3-Noise

- Check the alternator chain slack and replace the chain if necessary (see Crankshaft/Transmission chapter).
- Check the alternator shaft ball bearings if they make a noise.
- Check the alternator ball bearings, stator coil, and/or rectifier if the alternator makes a noise.

★Repair or replace the damaged parts.

Stator Coil Inspection

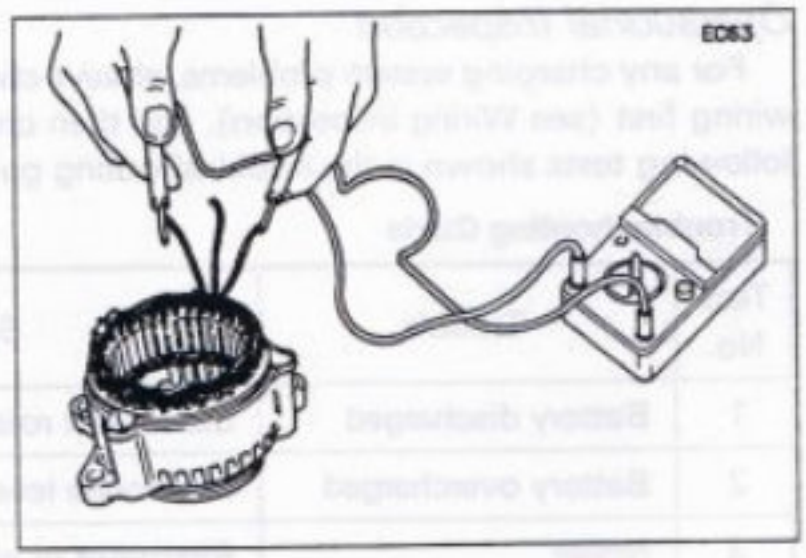

- Connect the hand tester (× 1 Ω range) between the coil leads and read the tester.

★If the tester does not read as specified, replace the alternator frame.

Stator Coil Resistance : 1.0 Ω or less

- Using the highest hand tester range, measure the resistance between the stator coil core and each of the coil windings.

★If there is any reading at all, the stator coil winding has a short and the alternator frame must be replaced.

Rotor Coil Inspection

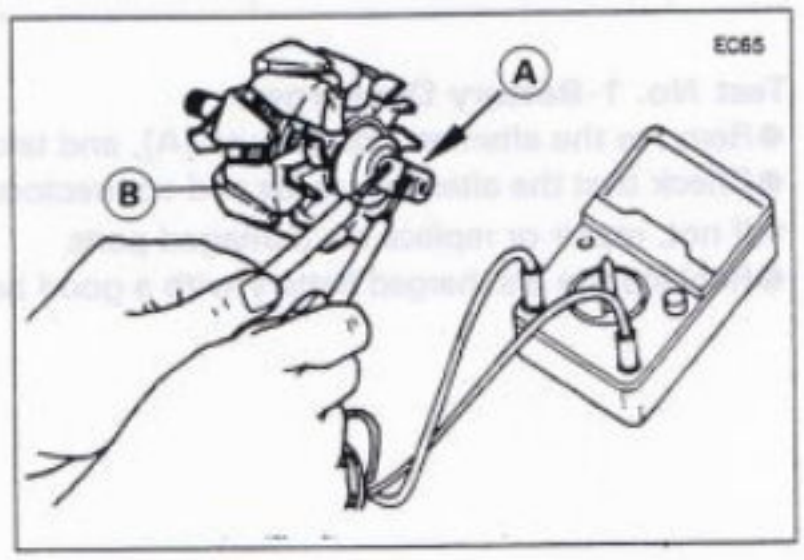

- Connect the hand tester (x 1 Ω range) between the slip rings [A] and read the tester.

★If the tester does not read as specified, replace the rotor [B].

Rotor Coil Resistance: 2.3 ~ 3.5 Ω

- Using the highest tester range, measure the resistance between the rotor shaft and each of the slip rings.

★If there is any reading at all, the rotor coil has a short and must be replaced.

Slip Ring Cleaning

- Visually inspect the slip ring for dirt or pitting.

★If necessary, smooth the slip ring with No. 300 ~ No. 500 emery cloth.

Slip Ring Diameter

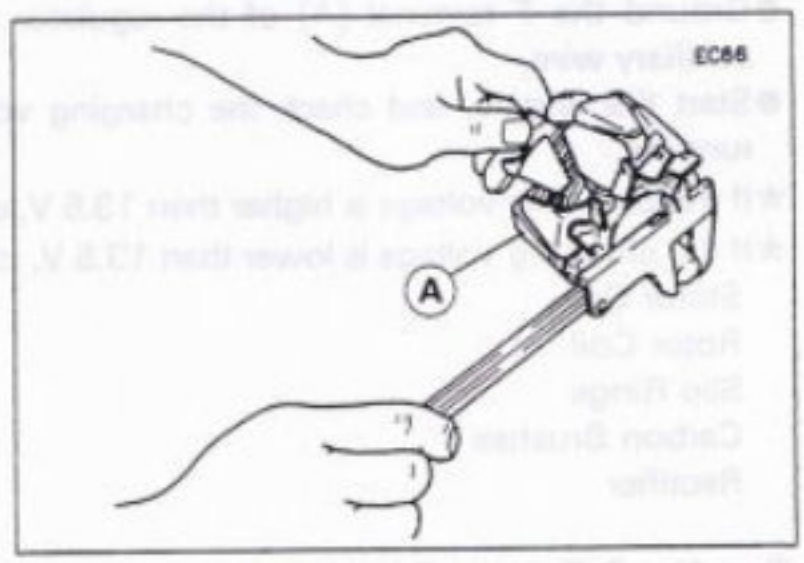

★If the measurement is less than the service limit, replace the rotor [A].

Slip Ring Diameter

Standard:	**14.4 mm**
Service Limit:	**14.0 mm**

Carbon Brush Length

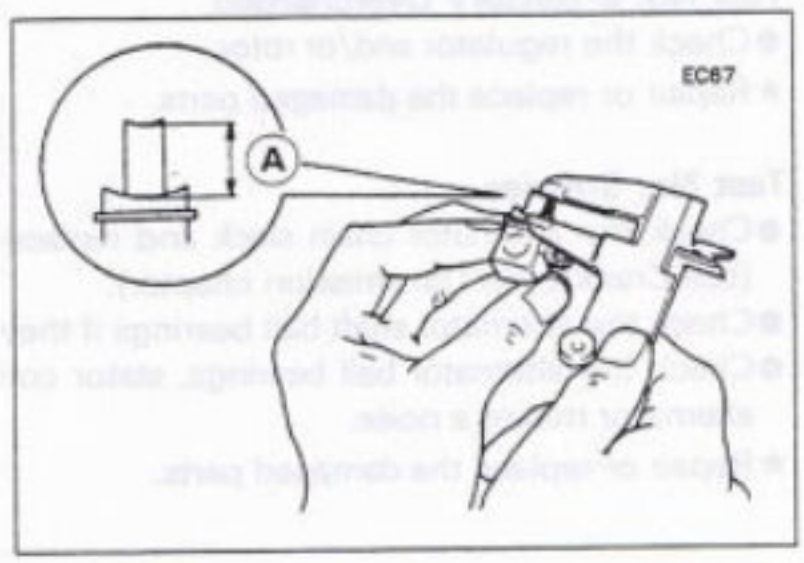

- Measure the length [A] of both carbon brushes that stick out of the holder.

★If either one is worn down to less than the service limit, replace it.

Carbon Brush Length (projected portion)

Standard:	**10.5 mm**
Service Limit:	**4.5 mm**

Rectifier Inspection

- Set the hand tester to the 1 kΩ range.
- Zero the hand tester, and connect it to each terminal [A] to check the resistance in both directions.

○ The resistance should be low in one direction and more than ten times as much in the other direction. If the rectifier [B] shows low or high in both directions, the rectifier is defective and the rectifier must be replaced.

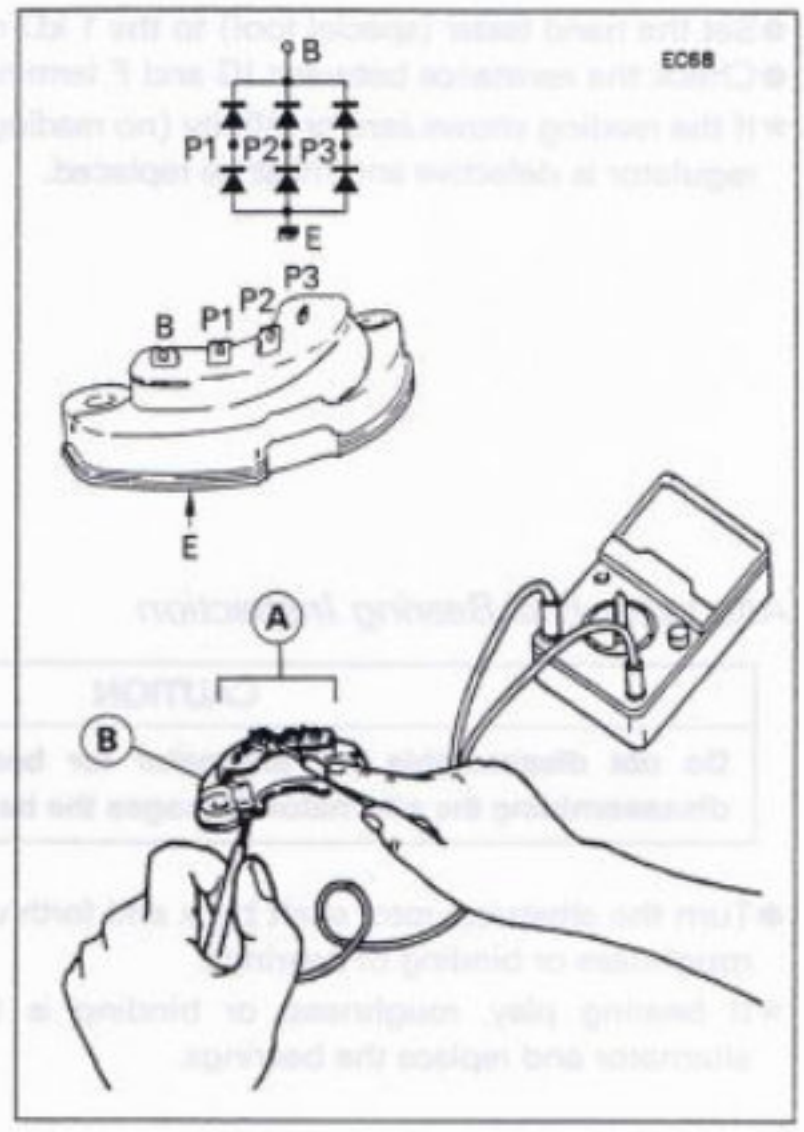

NOTE

○ *The actual meter reading varies with the meter used and the individual rectifier, but, generally speaking, the lower reading should be from zero to one half the scale.*

CAUTION
If a megger or a meter with a large-capacity battery is used, the rectifier will be damaged.

Regulator Inspection

- Prepare testing tools.

Test light:	Bulb rated 12 V 3.4 W
Batteries:	Two 12 V batteries
Test wires:	Three auxiliary wires

CAUTION
The test light works as an indicator and also a current limiter to protect the regulator from excessive current. Do not use an ammeter instead of a test light.

- Connect the test light and the 12 V battery to the regulator [A] as shown.

○ The test light should go on at this time.

CAUTION
Do not contact the regulator metal case with the wires from the battery (+) or (−) terminal during the test.

★ If the test light does not go on, the regulator is damaged and must be replaced.

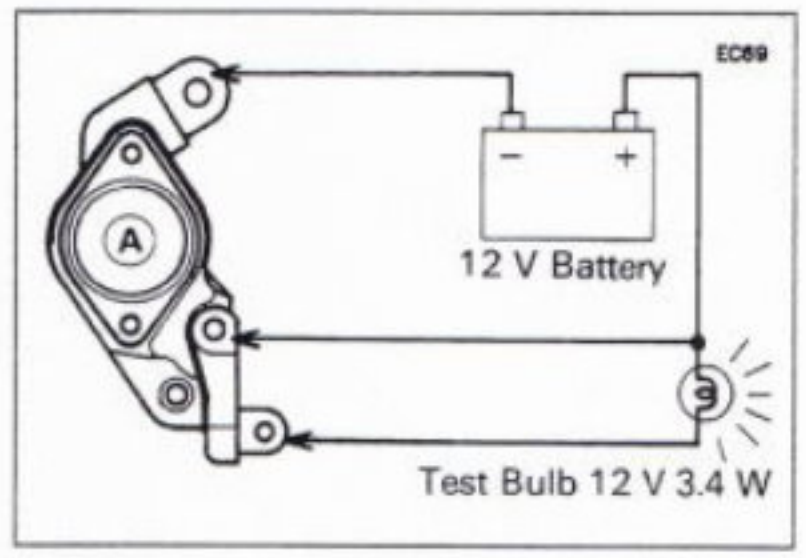

- Connect the test light and two 12 V batteries to the regulator as shown.

○ The test light should not go on at this time.

★ If the test light goes on, the regulator is damaged and must be replaced.

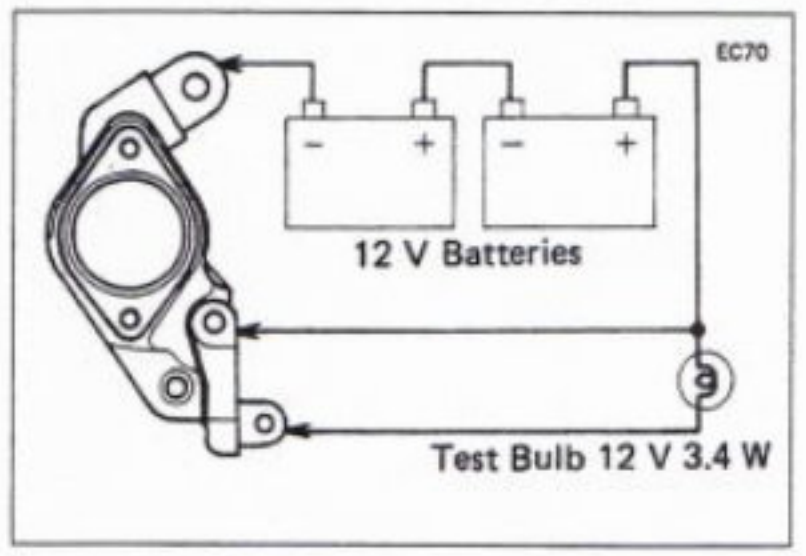

- Set the hand tester (special tool) to the 1 kΩ range.
- Check the resistance between IG and F terminals in both directions.

★If the reading shows zero or infinity (no reading) in both directions, the regulator is defective and must be replaced.

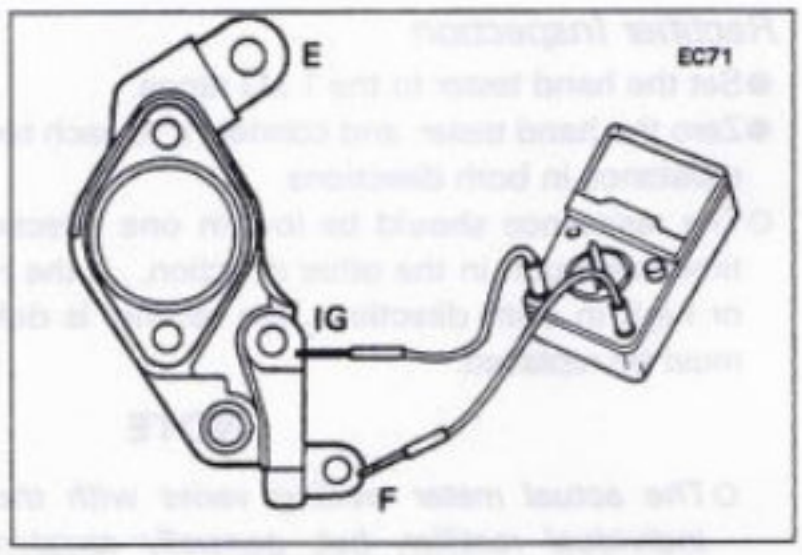

Alternator Ball Bearing Inspection

CAUTION
Do not disassemble the alternator for bearing inspection since disassembling the alternator damages the bearings.

- Turn the alternator rotor shaft back and forth while checking for plays, roughness or binding of bearings.

★If bearing play, roughness, or binding is found, disassemble the alternator and replace the bearings.

Alternator Circuit

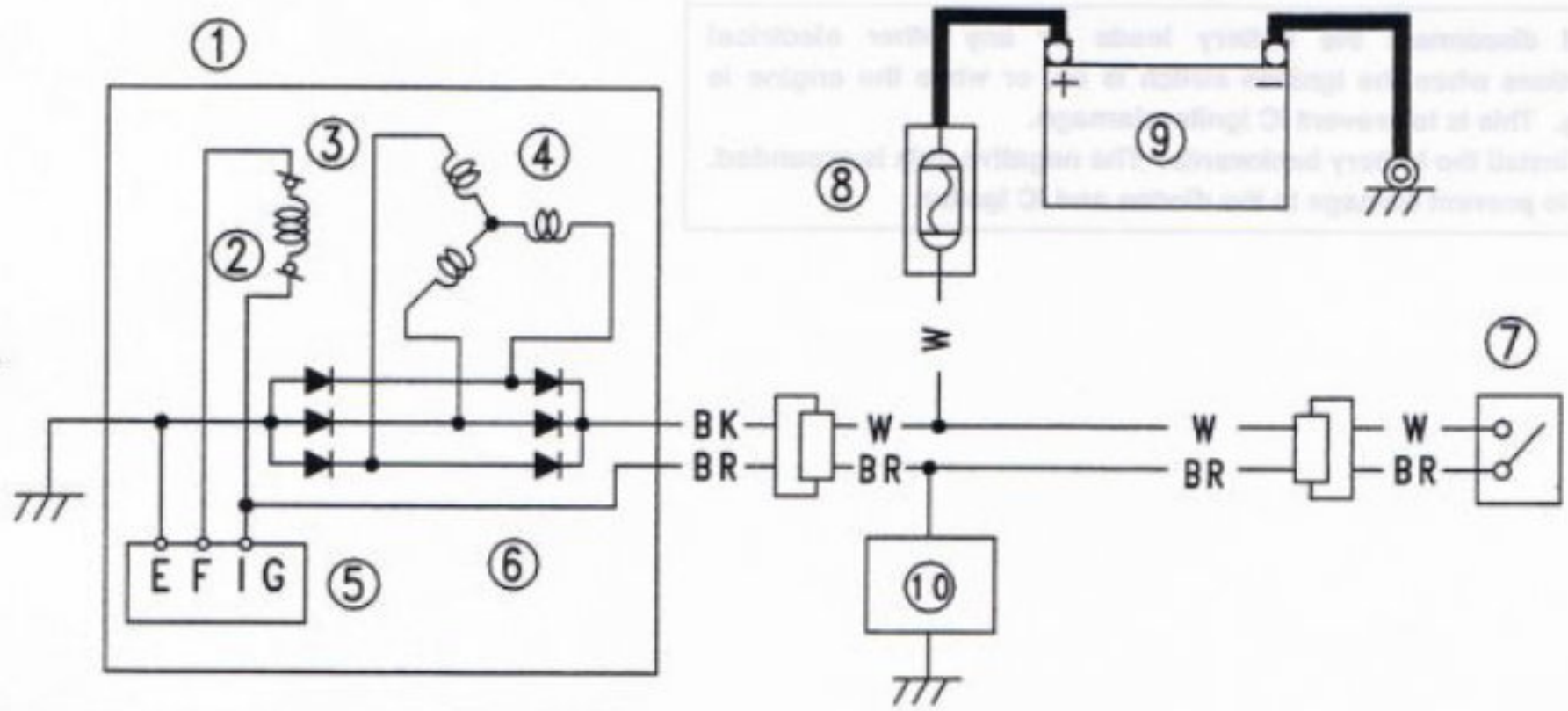

1. Alternator
2. Rotor
3. Carbon Brush
4. Stator Coil
5. Regulator
6. Rectifier
7. Ignition Switch
8. Main Fuse 30A
9. Battery
10. Load

Ignition System

⚠WARNING

The ignition system produces extremely high voltage. Do not touch the spark plugs, ignition coils, or spark plug leads while the engine is running, or you could receive a severe electrical shock.

CAUTION

Do not disconnect the battery leads or any other electrical connections when the ignition switch is on, or while the engine is running. This is to prevent IC igniter damage.
Do not install the battery backwards. The negative side is grounded. This is to prevent damage to the diodes and IC igniter.

Pickup Coil Removal

- Remove:
  - Fuel Tank (see Fuel System chapter)
  - Pickup Coil Lead Connector [A]
  - Air Cleaner Housing Cover
  - Pickup Coil Cover

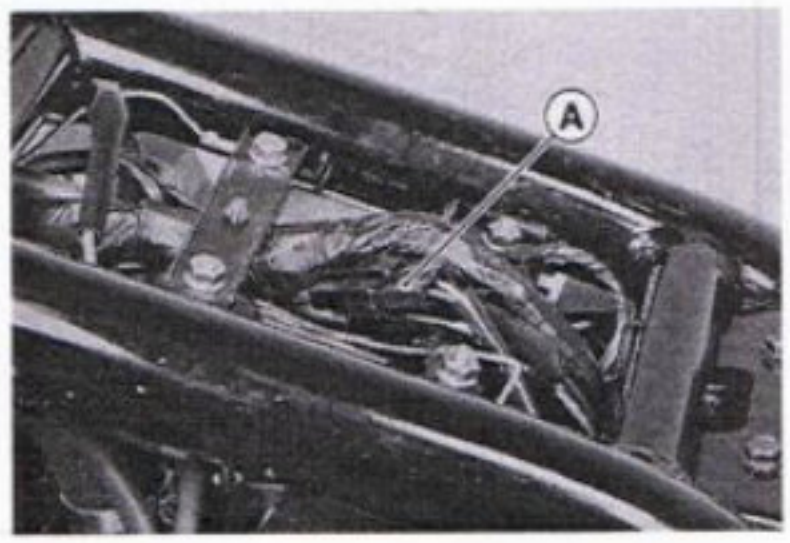

- Remove:
  - Pickup Coil Bolts [A]
  - Holder [B]
  - Damper [C]
  - Grommet [D]
  - Pickup Coil [E]

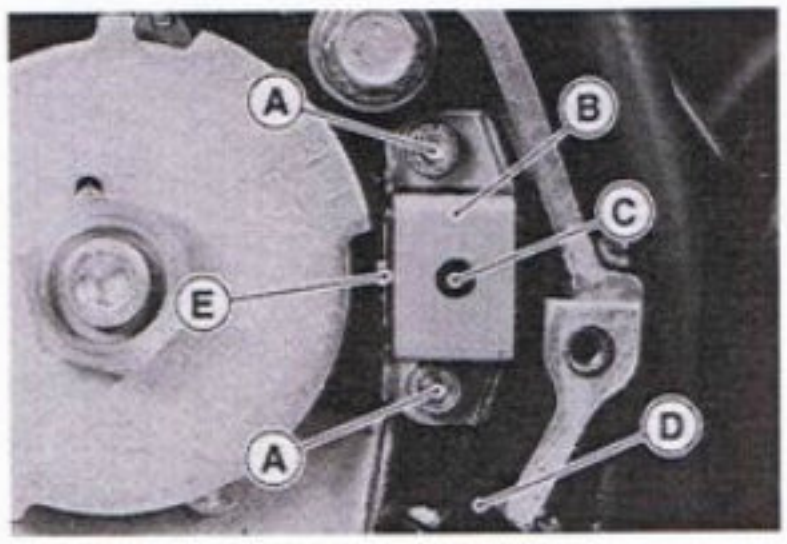

Pickup Coil Installation

- Route the pickup coil lead correctly (see Cable, Wire, and Hose Routing in the General/Information chapter).
- Apply a non-permanent locking agent to the threads of the pick up coil bolts.
- Install the pickup coil and tighten the pickup coil bolts.

Torque – Pickup Coil Bolts: 5.9 N-m (0.60 kg-m, 52 in-lb)

- Apply silicone sealant to the crankcase halves mating surface [A] on the front and rear sides of the pickup coil cover mount.
- Apply silicone sealant to the pick up coil lead grommet [B] and set the grommet securely in the notch of the crankcase.

Sealant – Kawasaki Bond (Silicone Sealant): 56019-120

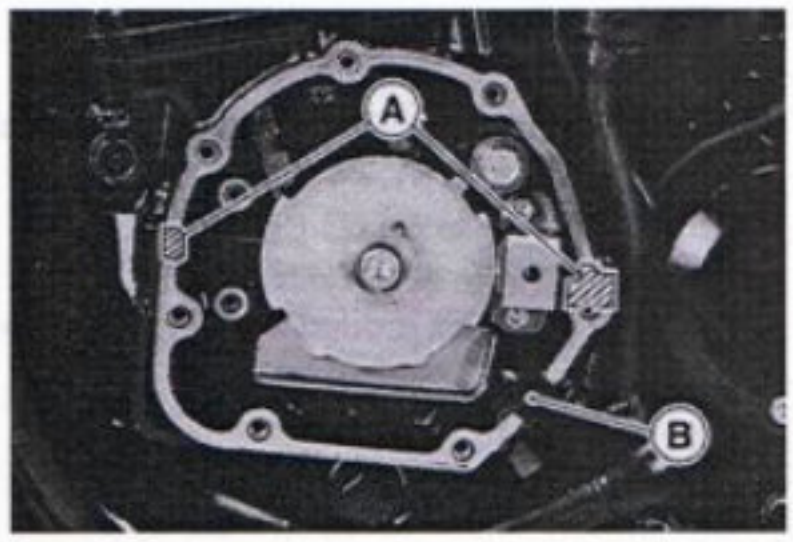

- Apply a non-permanent locking agent to the two pickup coil cover bolts [A] shown and tighten them.

Torque – Pickup Coil Cover Bolts: 9.8 N-m (1.0 kg-m, 87 in-lb)

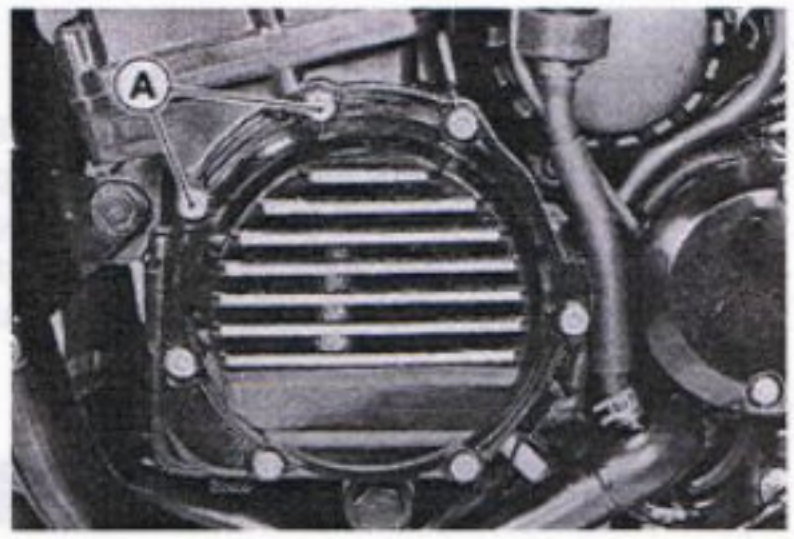

Pickup Coil Inspection

- Remove:
  Fuel Tank (see Fuel System chapter)
  Pickup Coil Lead Connector [A]
- Set the hand tester to the x 100 Ω range and connect it to the pickup coil lead connector.

★If there is more resistance than the specified value, the coil has an open lead and must be replaced. Much less than this resistance means the coil is shorted, and must be replaced.

Pickup Coil Resistance: 380 ~ 570 Ω

- Using the highest resistance range of the tester, measure the resistance between the pickup coil leads and chassis ground.

★Any tester reading less than infinity (∞) indicates a short, necessitating replacement of the pickup coil assembly.

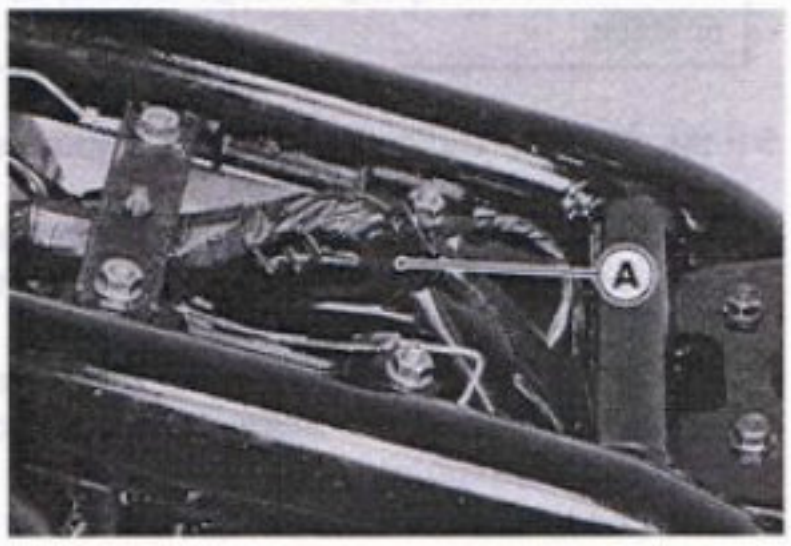

Ignition Coil Removal

- Remove:
  Fuel Tank (see Fuel System chapter)
  Spark Plug Caps
  Mounting Nuts [A]
  Primary Lead Connectors
  Ignition Coils [B]

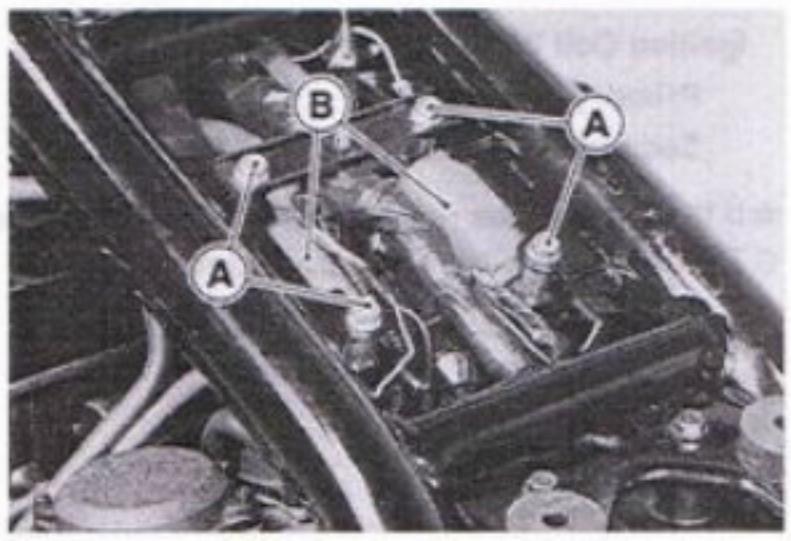

Ignition Coil Installation

- Install the ignition coils.
- ○ Connect the primary winding leads to the ignition coil terminals.
  - Black Lead → to #1, #4 Coil [A]
  - Green Lead → to #2, #3 Coil [B]
  - Red Leads → to both Coils
- ○ Tighten the chassis ground lead [C] with the #2, #3 coil.

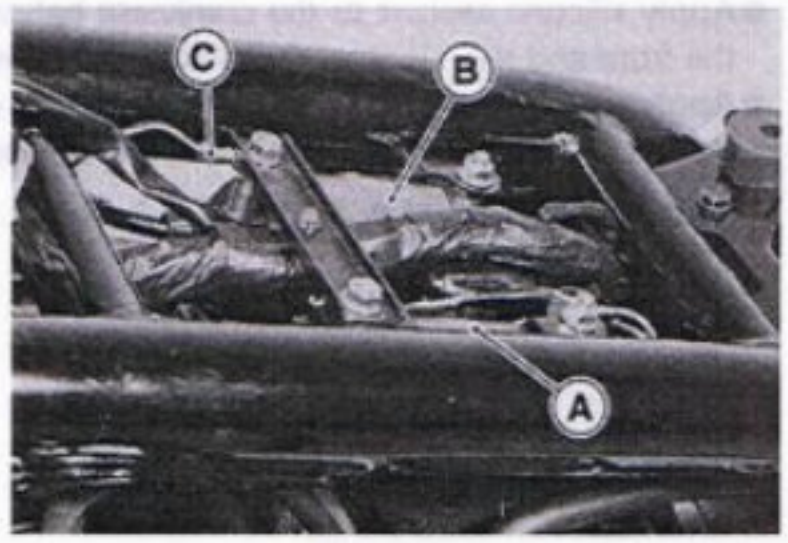

Ignition Coil Inspection

- Remove the ignition coils(see this chapter).
- Measure the arcing distance with the suitable commercially available coil tester [A] to check the condition of the ignition coil [B].
- Connect the ignition coil (with the spark plug cap left attached at the end of the spark plug lead) to the tester in the manner prescribed by the manufacturer and measure the arcing distance.

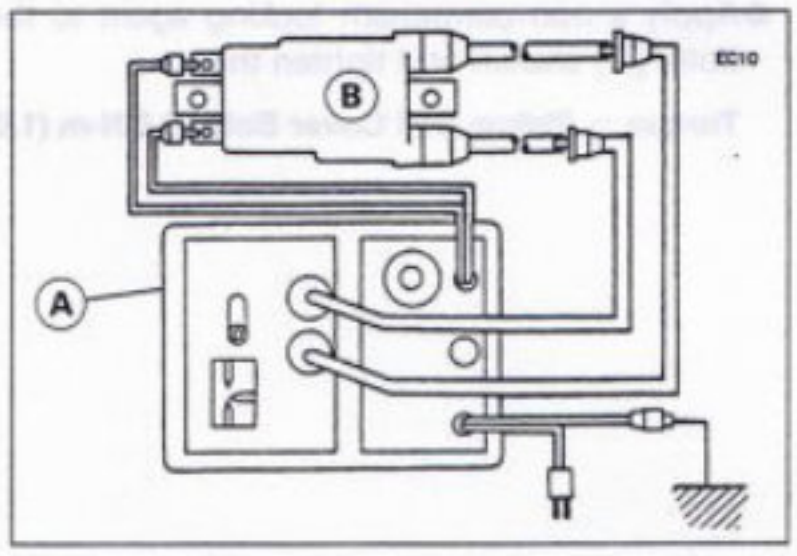

Ignition Coil Arcing Distance : 6 mm or more

⚠WARNING

To avoid extremely high voltage shocks, do not touch the coil body or leads.

★ If the distance reading is less than the specified value, the ignition coil or spark plug caps are defective.

- To determine which part is defective, measure the arcing distance again with the spark plug caps removed from the ignition coil. Remove the caps by turning them counterclockwise.

★ If the arcing distance is subnormal as before, the trouble is with the ignition coil itself. If the arcing distance is now normal, the trouble is with the spark plug cap.

★ If the coil tester is not available, the coil can be checked for a broken or badly shorted winding with the hand tester.

NOTE

○ *The hand tester cannot detect layer shorts and shorts resulting from insulation breakdown under high voltage.*

- Measure the primary winding resistance [A] as follows.
- ○ Connect the hand tester between the coil terminals.
- ○ Set the tester to the x 1 Ω range, and read the tester.
- Measure the secondary winding resistance [B] as follows.
- ○ Remove the plug caps by turning them counterclockwise.
- ○ Connect the tester between the spark plug leads.
- ○ Set the tester to the x 1 kΩ range and read the tester.

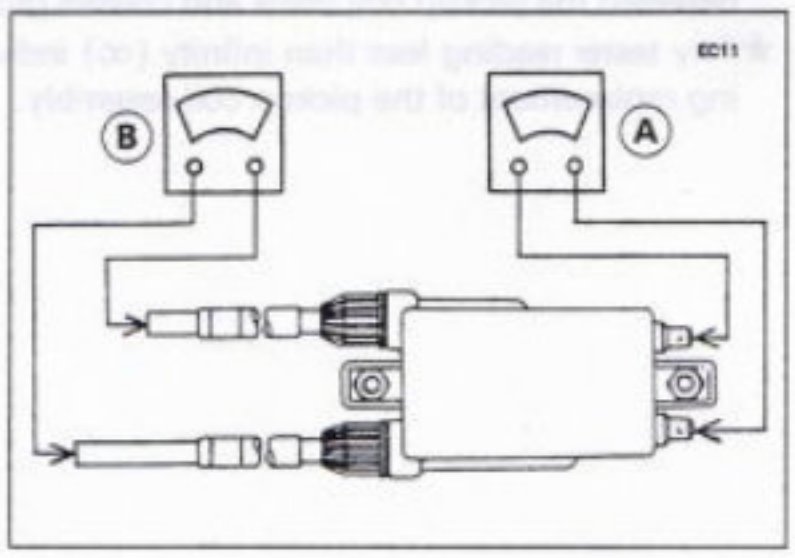

Ignition Coil Winding Resistance

Primary Windings:	**2.3 ~ 3.5 Ω**
Secondary Windings:	**12 ~ 18 kΩ**

★ If the tester does not read as specified, replace the coil.

○ To install the plug cap, turn it clockwise.

Spark Plug Removal

- Remove the following.
  Fuel Tank (see Fuel System chapter)
  Spark Plug Caps
- Remove the spark plugs using the 16 mm plug wrench.

Special Tool – Spark Plug Wrench, Hex 16: 57001-1262

Spark Plug Installation

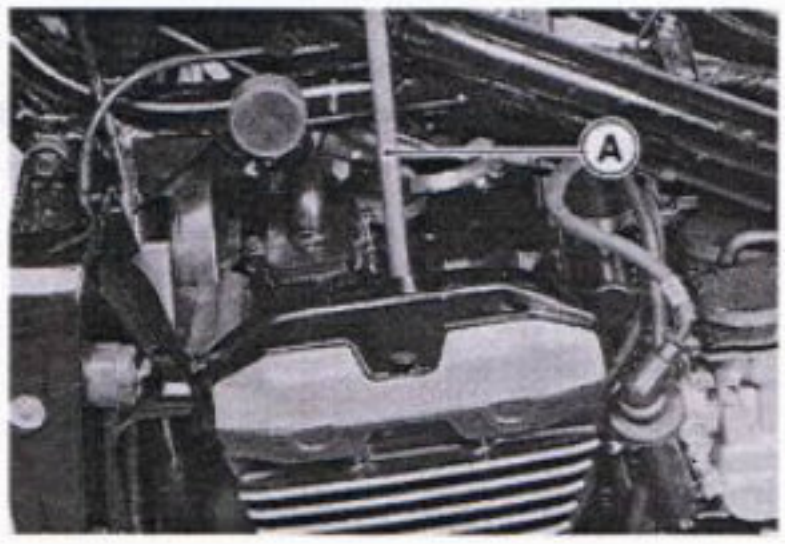

- Insert the spark plug vertically into the plug hole with the plug installed in the plug wrench [A].
- Tighten the plugs.

Special Tool – Spark Plug Wrench, Hex 16: 57001-1262
Torque – Spark Plugs: 14 N-m (1.4 kg-m, 10.0 ft-lb)

- Fit the plug caps securely.

Spark Plug Gap Inspection

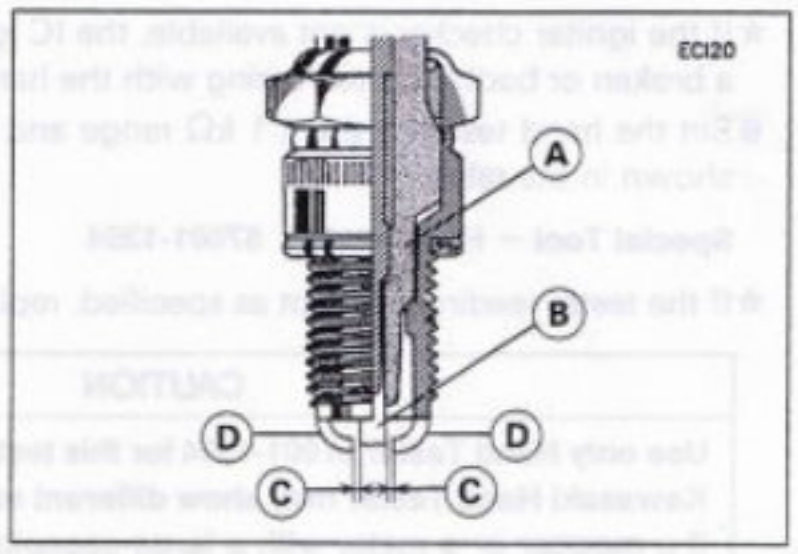

- Measure the gaps with a wire-type thickness gauge.

★If the gaps are incorrect, carefully bend the side electrode with a suitable tool to obtain the correct gaps.

Spark Plug Gap : 0.7 ~ 0.8 mm

Insulator [A]
Center Electrode [B]
Plug Gaps [C]
Side Electrodes [D]

IC Igniter Inspection

CAUTION
When inspecting the IC igniter, observe the following to avoid damage to the IC igniter. **Do not disconnect the IC igniter with the ignition switch on. This may damage the IC igniter.** **Do not disconnect the battery leads while the engine is running. This may damage the IC igniter.**

- Remove:
  Seat(Frame chapter)
  Tool Kit Compartment (see Seat Cover Removal section in Frame chapter)
  IC Igniter [A]

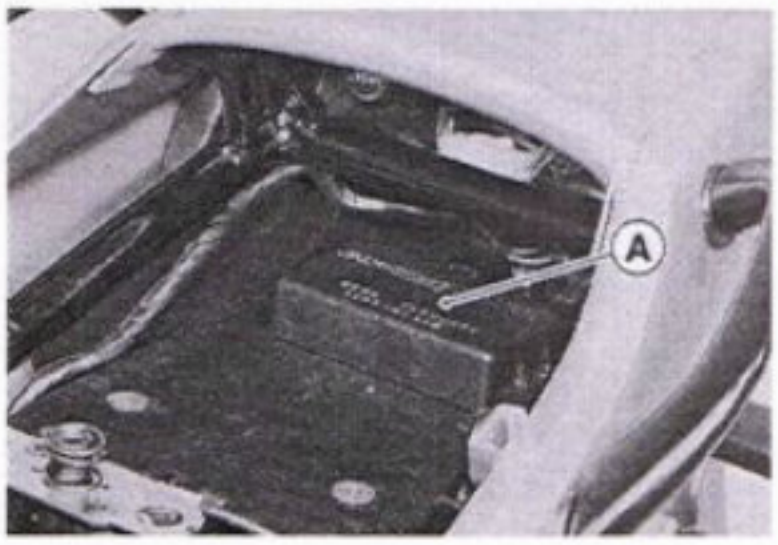

●To check the condition of the IC igniter, connect the igniter checker [A] to the IC igniter.

Special Tools – Igniter Checker Assembly: 57001-1378
Harness Adapter #13: 57001-1399

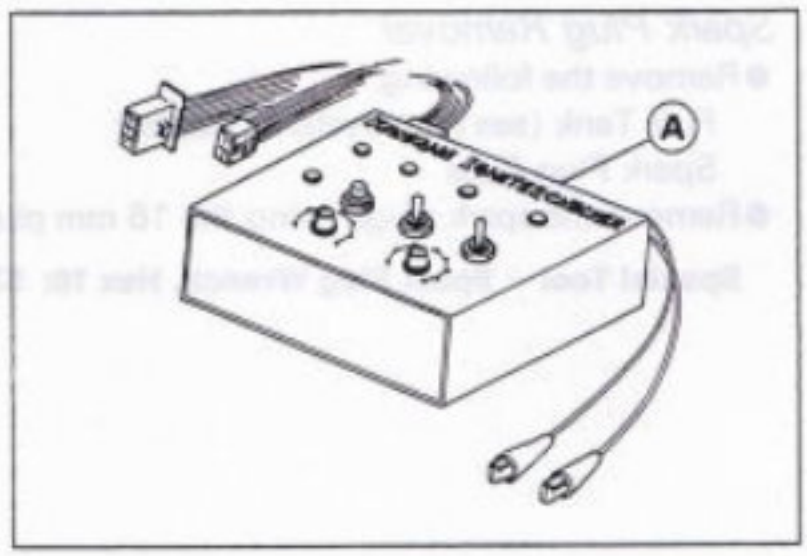

NOTE

○*When using the igniter checker, refer to the manufacturer's instructions.*
○*Using the igniter checker is a more reliable way to determine the condition of the IC igniter than igniter internal resistance measurements.*
○*The igniter checker can detect the simulated dynamic characteristics: igniter response to r.p.m., interlock circuit signal, tachometer signal and engine over speed limiter signal.*
○*The igniter checker cannot inspect the condition of the CDI unit.*

★If the igniter checker is not available, the IC igniter can be checked for a broken or badly shorted wiring with the hand tester.

●Set the hand tester to the x 1 kΩ range and make the measurements shown in the table.

Special Tool – Hand Tester: 57001-1394

★If the tester readings are not as specified, replace the IC igniter.

CAUTION
Use only Hand Tester 57001-1394 for this test. A tester other than the Kawasaki Hand Tester may show different readings. **If a megger or a meter with a large-capacity battery is used, the IC igniter will be damaged.**

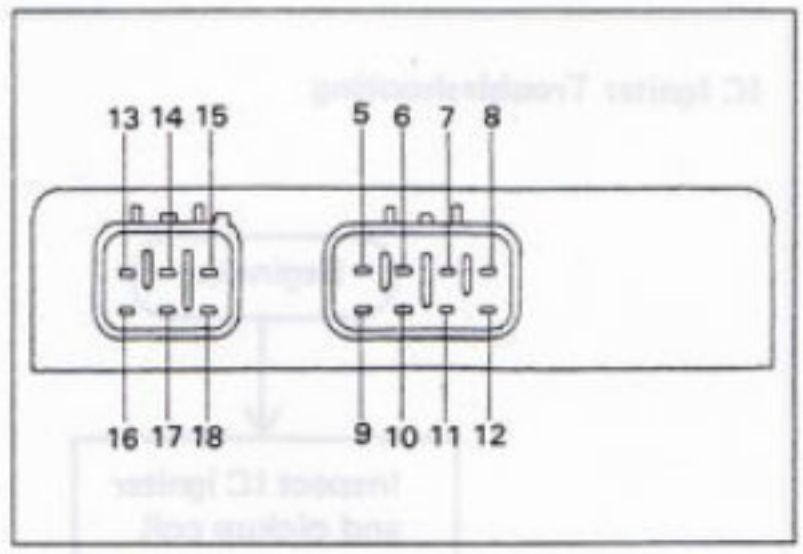

IC Igniter Internal Resistance (8P) **Unit: kΩ**

		Tester (+) Lead Connection							
	Terminal	5	6	7	8	9	10	11	12
(−)*	5	–	∞	2 ~ 8	∞	2 ~ 8	2 ~ 8	45 ~ 100	1.8 ~ 7.5
	6	∞	–	∞	∞	∞	∞	∞	∞
	7	2 ~ 8	∞	–	∞	0 ~ 0.6	0 ~ 0.6	20 ~ 90	3.4 ~ 14
	8	∞	∞	∞	–	∞	∞	∞	∞
	9	2 ~ 8	∞	0 ~ 0.6	∞	–	0 ~ 0.6	20 ~ 90	3.4 ~ 14
	10	2 ~ 8	∞	0 ~ 0.6	∞	0 ~ 0.6	–	20 ~ 90	3.4 ~ 14
	11	22 ~ 100	∞	20 ~ 90	∞	20 ~ 90	20 ~ 90	–	24 ~ 100
	12	1.8 ~ 7.5	∞	3.4 ~ 14	∞	3.4 ~ 14	3.4 ~ 14	24 ~ 100	–

(−)*: Tester (−) Lead Connection

IC Igniter Internal Resistance (6P) **Unit: kΩ**

		Tester (+) Lead Connection					
	Terminal	13	14	15	16	17	18
	13	–	∞	∞	∞	∞	∞
	14	∞	–	∞	∞	∞	∞
	15	22 ~ 90	26 ~ 150	–	22 ~ 90	22 ~ 90	14 ~ 60
	16	∞	∞	∞	–	∞	∞
	17	22 ~ 90	26 ~ 150	30 ~ 150	22 ~90	–	14 ~ 60
	18	4.6 ~ 19	7 ~ 30	15 ~ 60	4.6 ~ 19	5 ~ 22	–

(−)*: Tester (−) Lead Connection

IC Igniter Troubleshooting

1)IC igniter or pickup coil damaged
2)Even if the preceding checks show good, it may be defective in some manner not readily detectable with the hand tester.

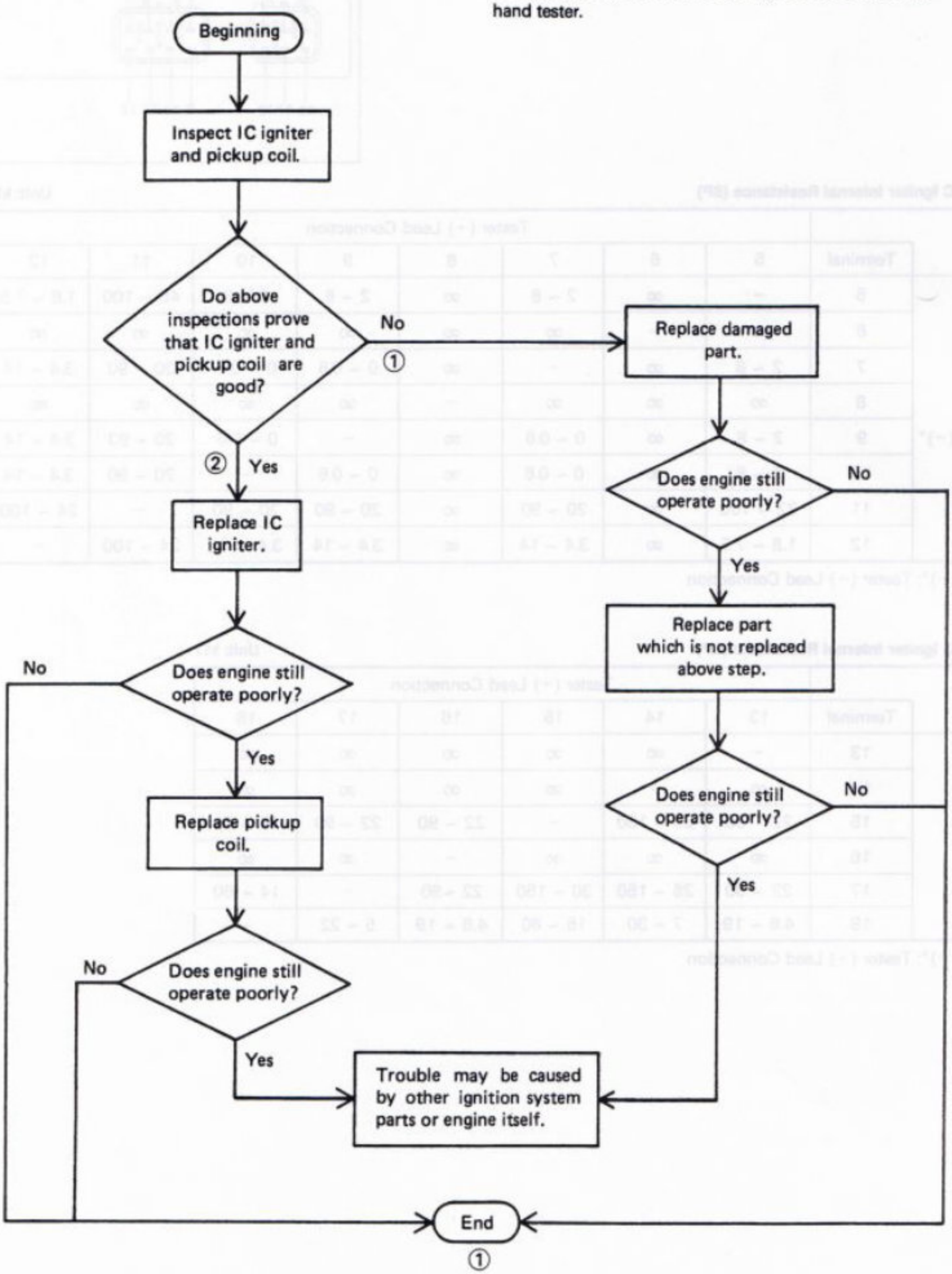

Ignition System Circuit

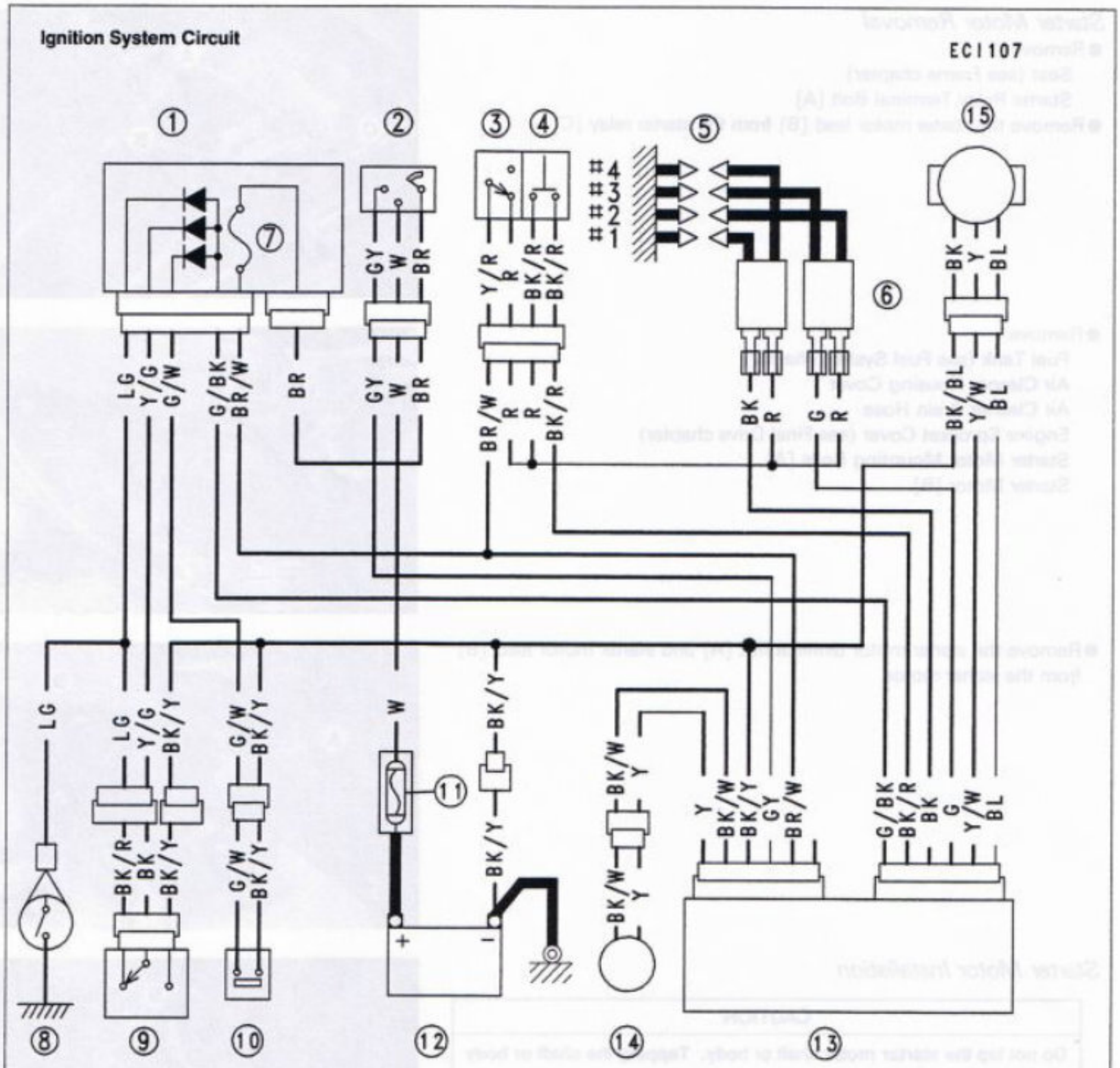

1. Junction Box
2. Ignition Switch
3. Engine Stop Switch
4. Starter Button
5. Spark Plugs
6. Ignition Coils
7. Ignition Fuse 10A
8. Neutral Switch
9. Starter Lockout Switch
10. Side Stand Switch
11. Main Fuse 30A
12. Battery
13. IC Igniter
14. Pickup Coil
15. Throttle Sensor

Starter Motor

Starter Motor Removal

- Remove:
  Seat (see Frame chapter)
  Starter Relay Terminal Bolt [A]
- Remove the starter motor lead [B] from the starter relay [C].

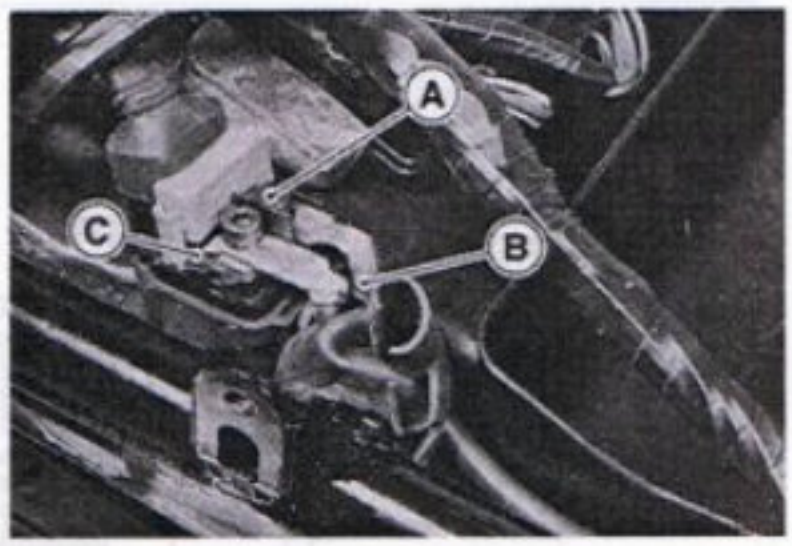

- Remove:
  Fuel Tank (see Fuel System chapter)
  Air Cleaner Housing Cover
  Air Cleaner Drain Hose
  Engine Sprocket Cover (see Final Drive chapter)
  Starter Motor Mounting Bolts [A]
  Starter Motor [B]

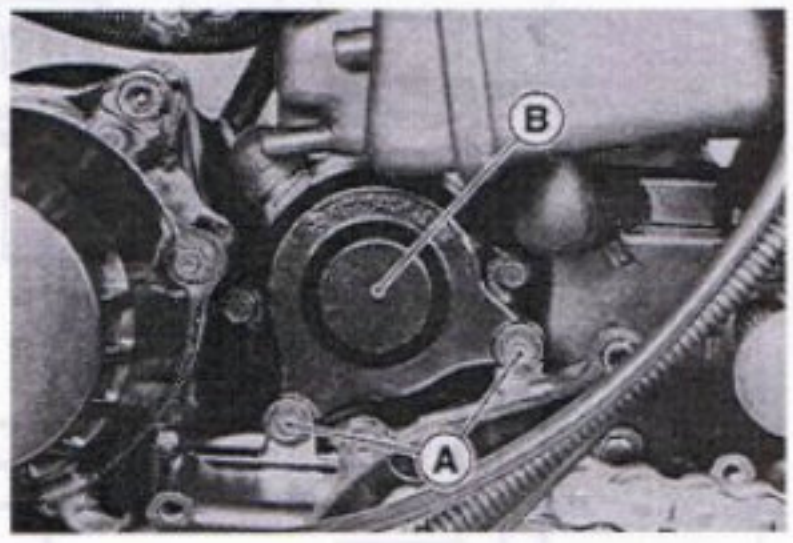

- Remove the starter motor terminal nut [A] and starter motor lead [B] from the starter motor.

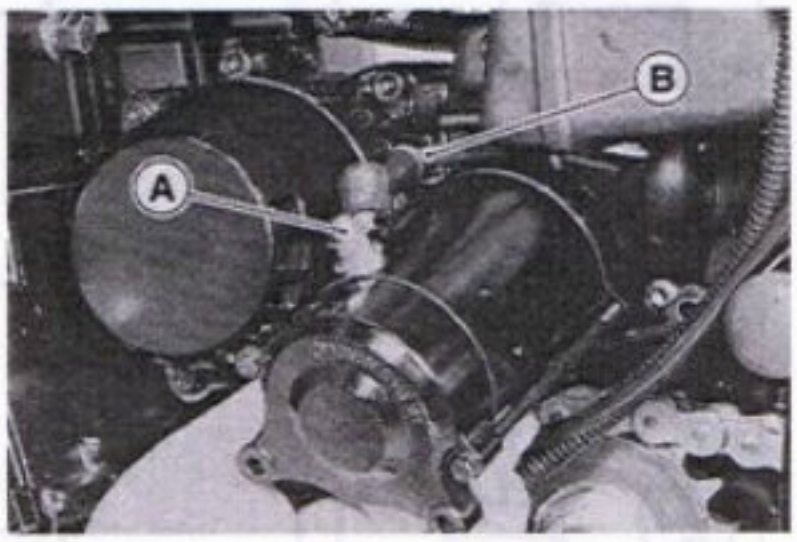

Starter Motor Installation

CAUTION
Do not tap the starter motor shaft or body. Tapping the shaft or body could damage the motor.

- When installing the starter motor, clean the starter motor legs [A] and crankcase [B] where the starter motor is grounded.

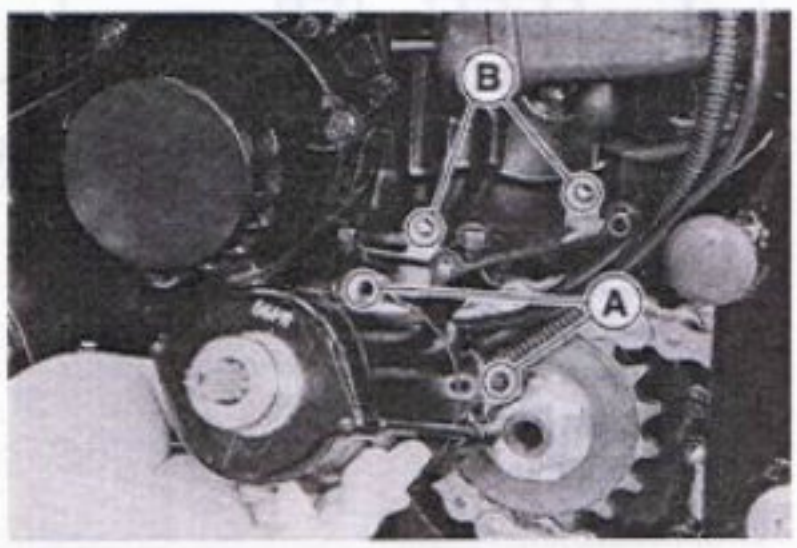

- Replace the O-ring [A] with a new one.
- Apply a small amount of engine oil to the O-ring.

Torque – Starter Motor Terminal Nut: 4.9 N-m (0.50 kg-m, 43 in-lb)
Starter Motor Mounting Bolts: 9.8 N-m (1.0 kg-m, 87 in-lb)

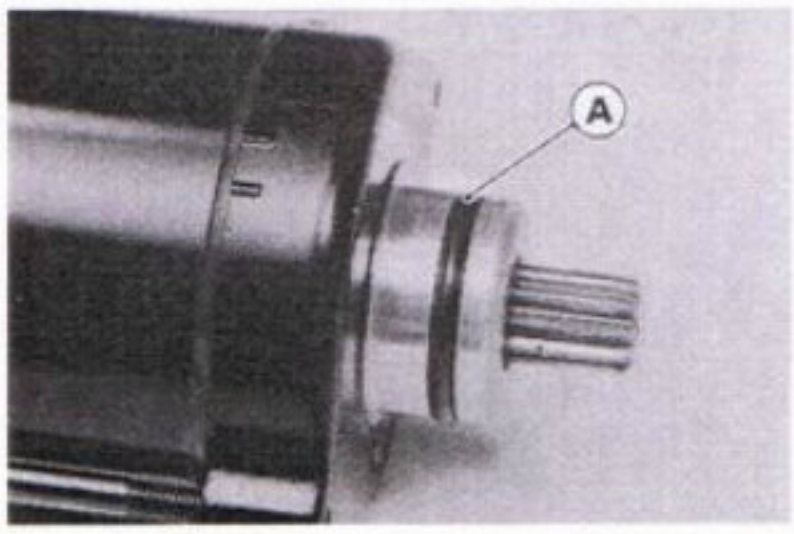

Starter Motor Disassembly

- Remove the starter motor (see this section).
- Take off the starter motor assembly bolts [A] and remove both end covers [B] and pull the armature out of the yoke.

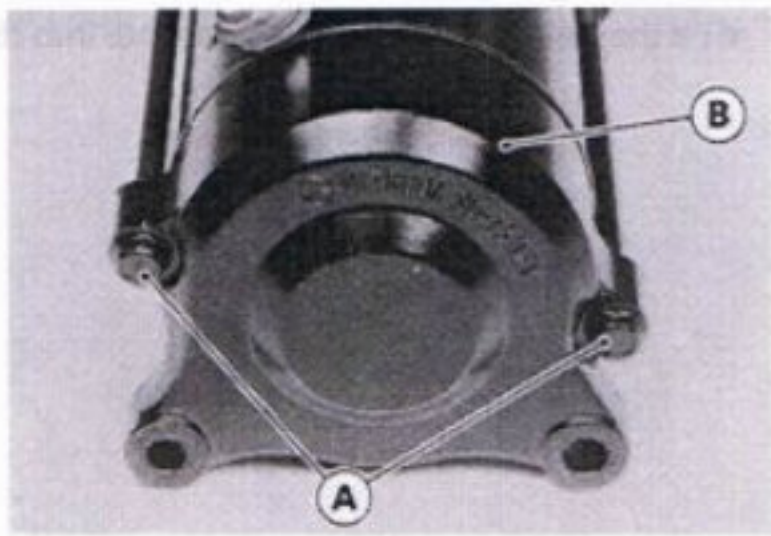

- Remove the terminal locknut [A] and terminal bolt [B] , and then remove the brush with the brush plate [C] from the yoke.

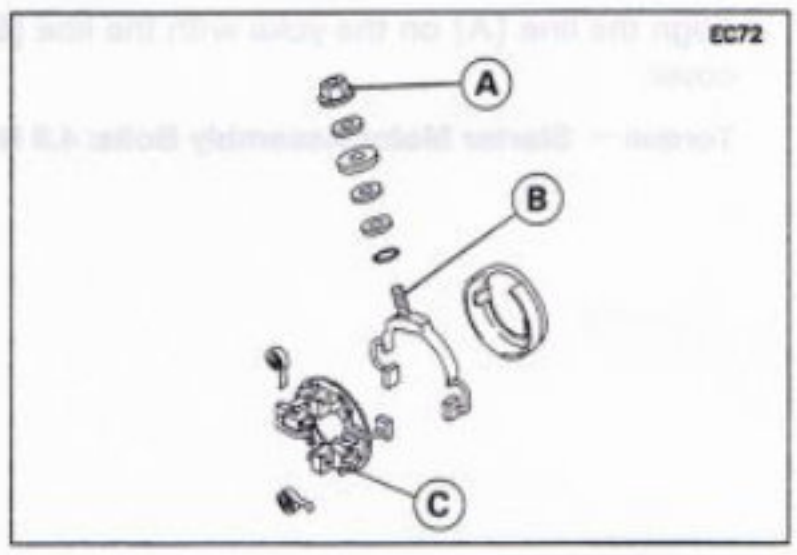

Starter Motor Assembly

- Apply a thin coat of grease to the oil seal [A].
- Fit the toothed washer [B] into the end cover.

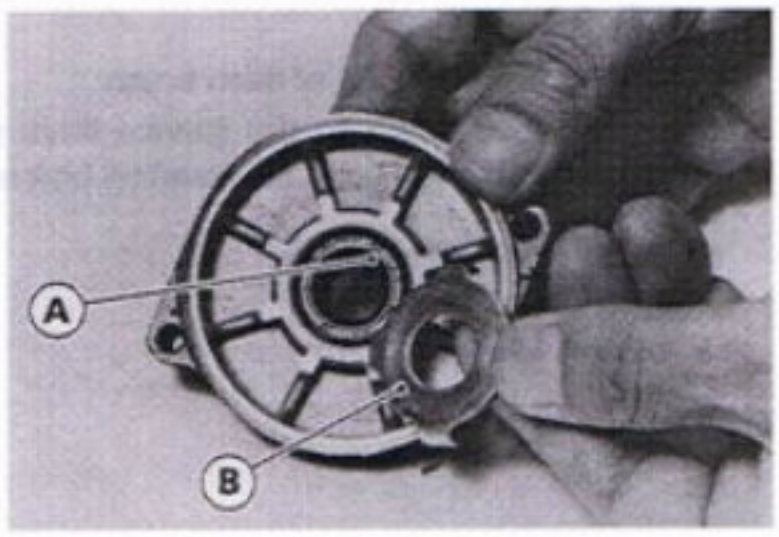

- Holding the springs [A] with suitable washers [B], put the armature among the brushes.

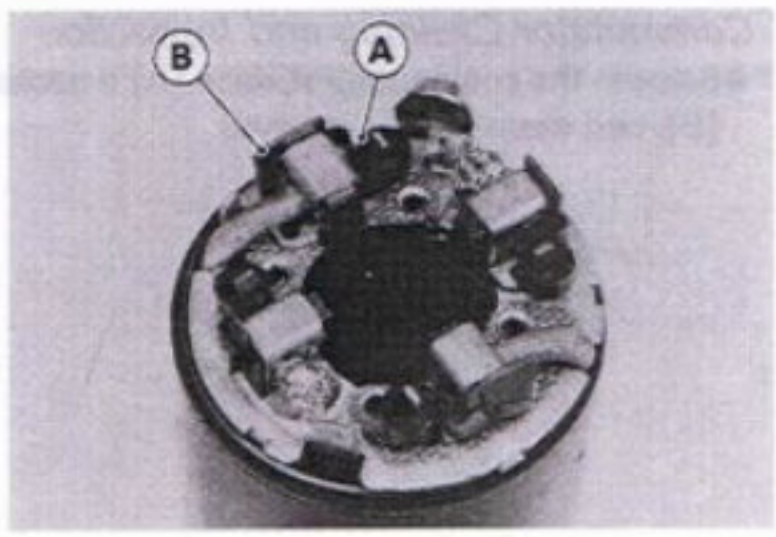

- Install the new O-rings [A] as shown.

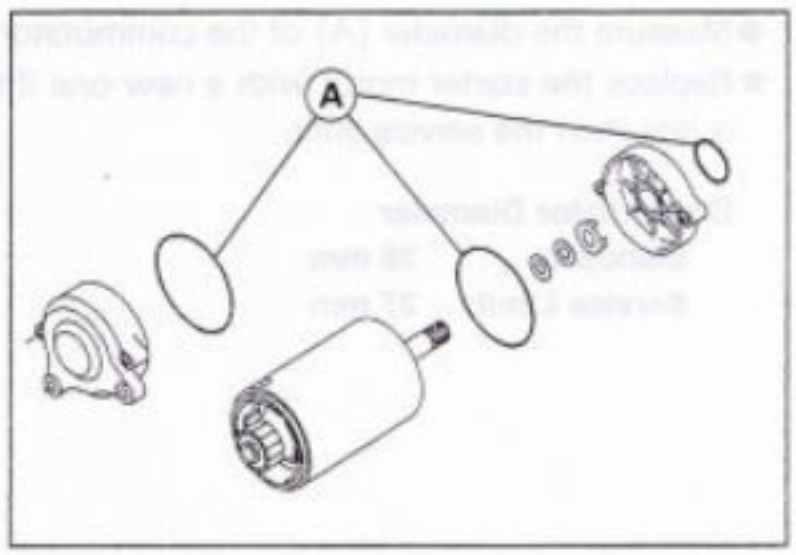

● Fit the tongue [A] on the brush plate into the end cover groove [B].

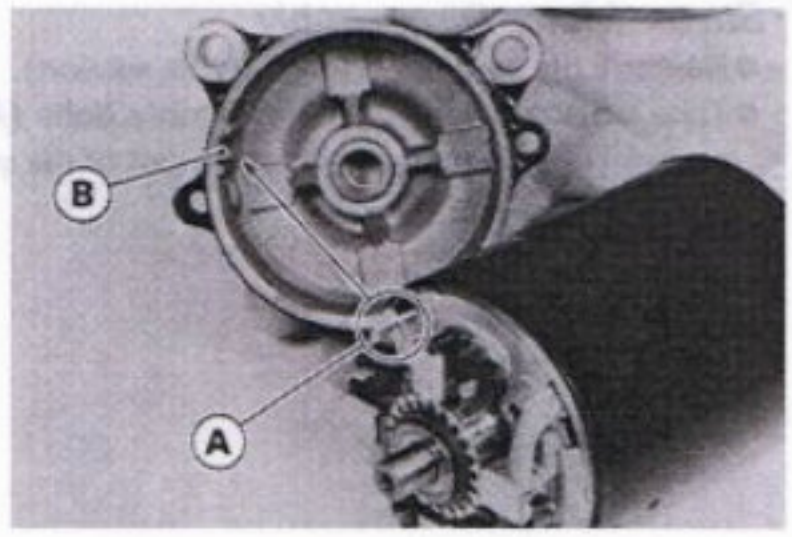

● Align the line [A] on the yoke with the line [B] on the right-hand end cover.

Torque – Starter Motor Assembly Bolts: 4.9 N-m (0.50 kg-m, 43 in-lb)

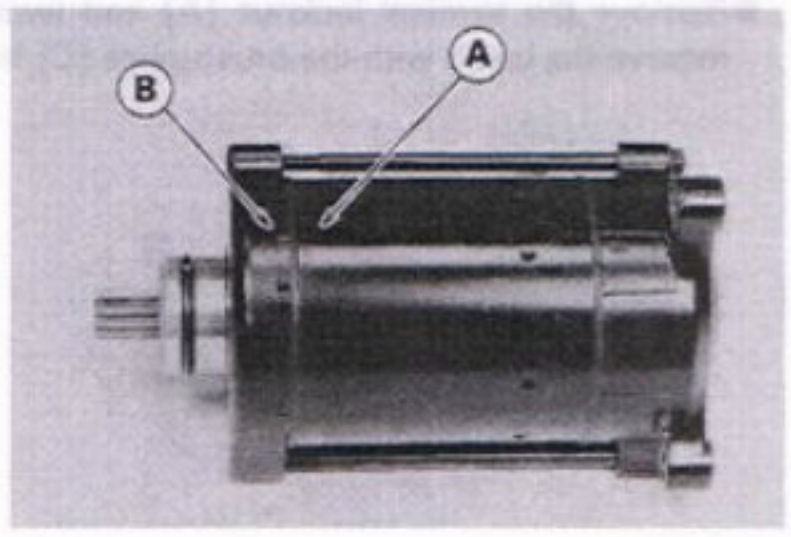

Brush Inspection

● Measure the length [A] of each brush.

★ If any is worn down to the service limit, replace the carbon brush holder assembly [B] and the terminal bolt assembly [C].

Starter Motor Brush Length

Standard:	**12 mm**
Service Limit:	**7 mm**

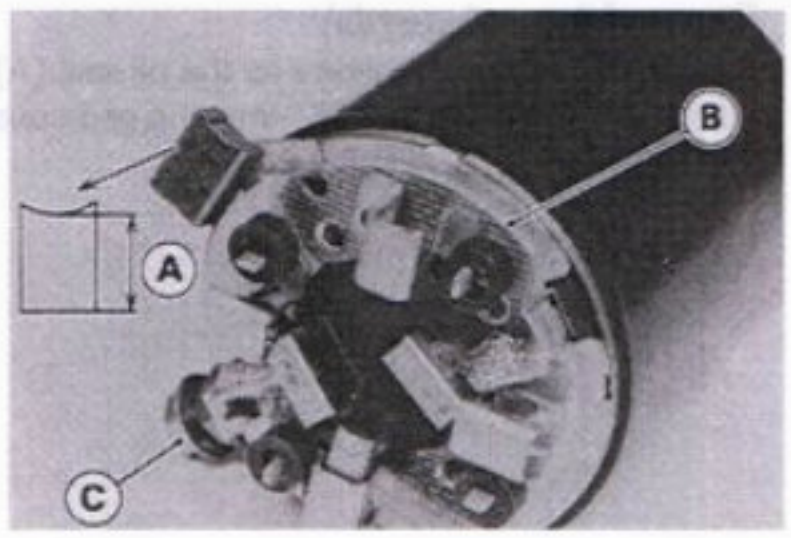

Commutator Cleaning and Inspection

● Smooth the commutator surface [A] if necessary with fine emery cloth [B], and clean out the grooves.

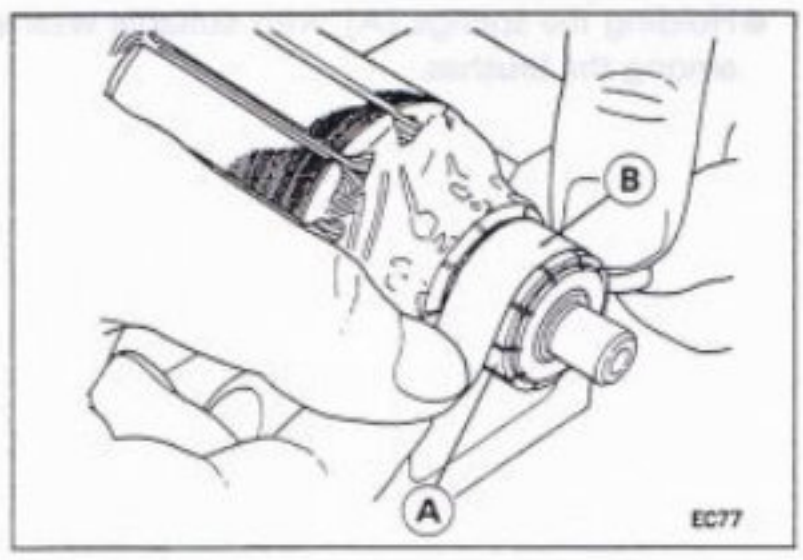

● Measure the diameter [A] of the commutator [B].

★ Replace the starter motor with a new one if the commutator diameter is less than the service limit.

Commutator Diameter

Standard:	**28 mm**
Service Limit:	**27 mm**

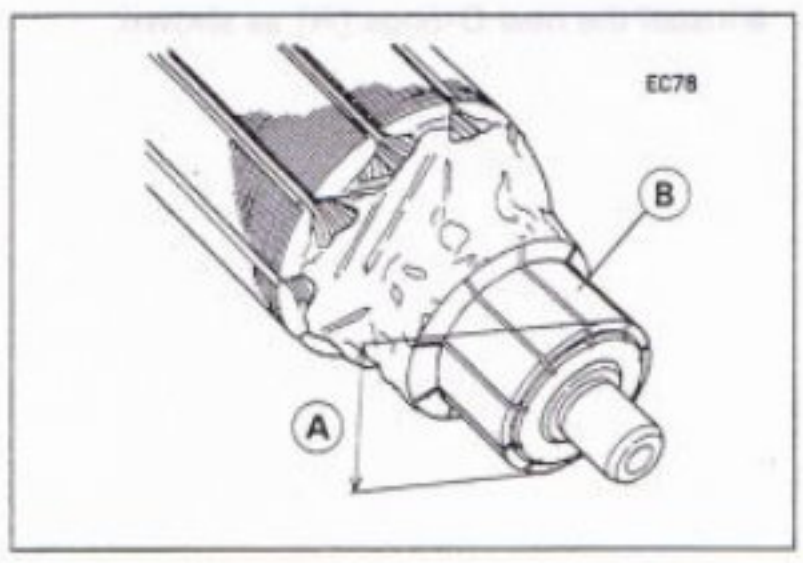

Armature Inspection

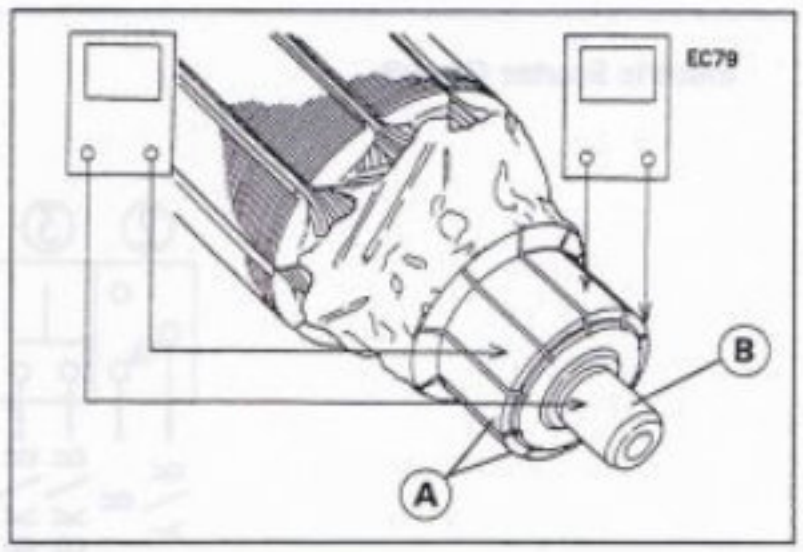

- Using the x 1 Ω hand tester range, measure the resistance between any two commutator segments [A].

★If there is a high resistance or no reading (∞) between any two segments, a winding is open and the starter motor must be replaced.

- Using the highest hand tester range, measure the resistance between the segments and the shaft [B].

★If there is any reading at all, the armature has a short and the starter motor must be replaced.

NOTE

○*Even if the foregoing checks show the armature to be good, it may be defective in some manner not readily detectable with the hand tester. If all other starter motor and starter motor circuit components check good, but the starter motor still does not turn over or only turns over weakly, replace the starter motor with a new one.*

Brush Lead Inspection

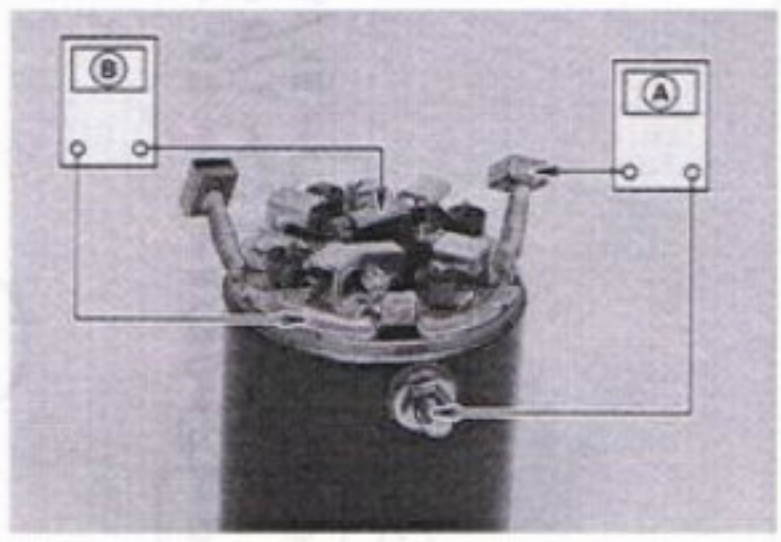

- Using the x 1 Ω hand tester range, measure the resistance as shown.
  [A] Terminal Bolt and Positive Brush
  [B] Brush Plate and Negative Brush

★If there is not close to zero ohms, the brush lead has an open. Replace the terminal bolt assembly and/or the brush holder assembly.

Brush Plate and Terminal Bolt Inspection

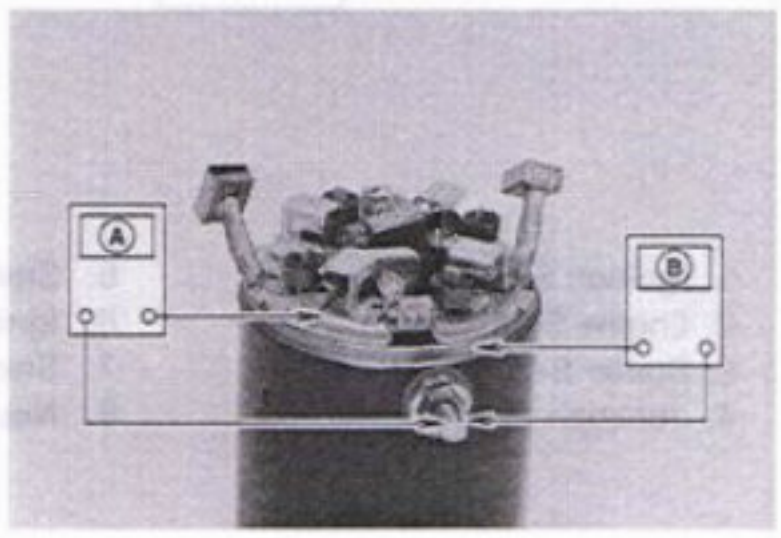

- Using the highest hand tester range, measure the resistance as shown.
  [A] Terminal Bolt and Brush Plate
  [B] Terminal Bolt and Yoke

★If there is any reading, the brush holder assembly and/or terminal bolt assembly have a short. Replace the brush holder assembly and the terminal bolt assembly.

Starter Relay Inspection

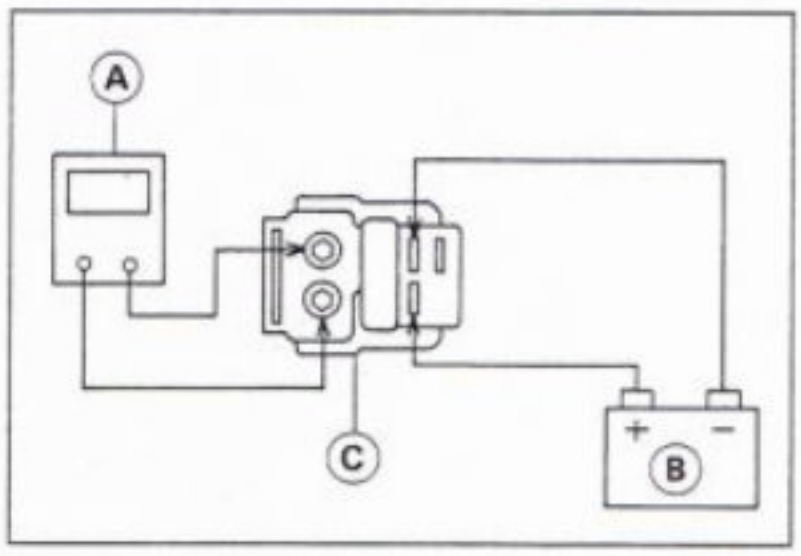

- Remove the seat (see Frame chapter).
- Remove the starter relay.
- Connect the hand tester [A] and 12 V battery [B] to the starter relay [C] as shown.

★If the relay does not work as specified, the relay is defective. Replace the relay.

Testing Relay

Tester Range: x 1 Ω range

Criteria: When battery is connected → 0 Ω

When battery is disconnected → ∞ Ω

Electric Starter Circuit

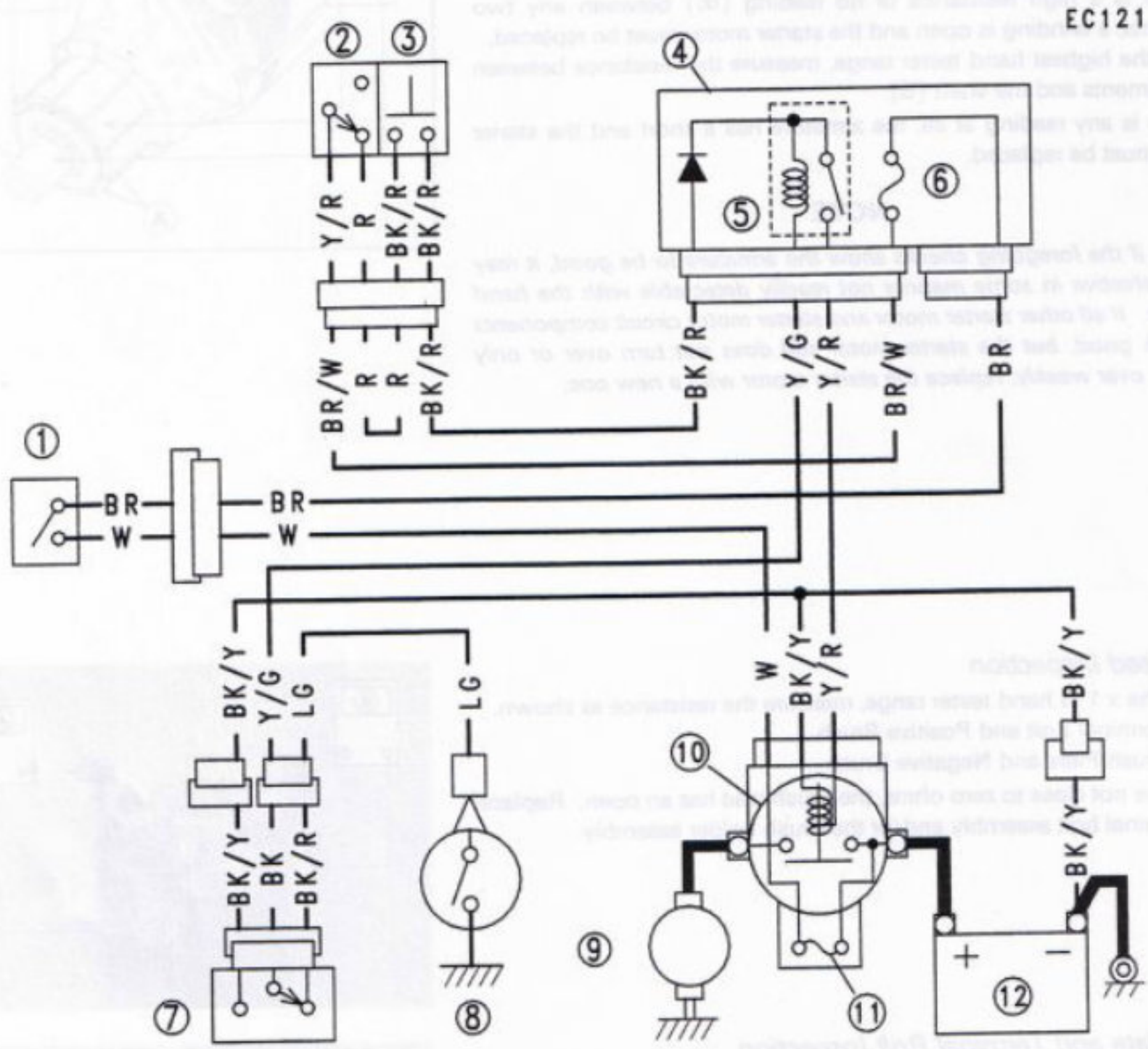

1. Ignition Switch
2. Engine Stop Switch
3. Starter Button
4. Junction Box
5. Starter Circuit Relay
6. Ignition Fuse 10A
7. Starter Lockout Switch
8. Neutral Switch
9. Starter Motor
10. Starter Relay
11. Main Fuse 30A
12. Battery

Lighting System

US, Canada, and Australia models have a full-time headlight system with a headlight relay and a headlight relay unit. In these models, the headlight does not go on when the ignition switch and the engine stop switch are first turned on. The headlight comes on when the engine starts running and stays on until the ignition switch is turned off. It does not come on during cranking.

Headlight Beam Horizontal Adjustment

- Turn the horizontal adjuster [A] on the headlight with a screwdriver in or out until the beam points straight ahead.

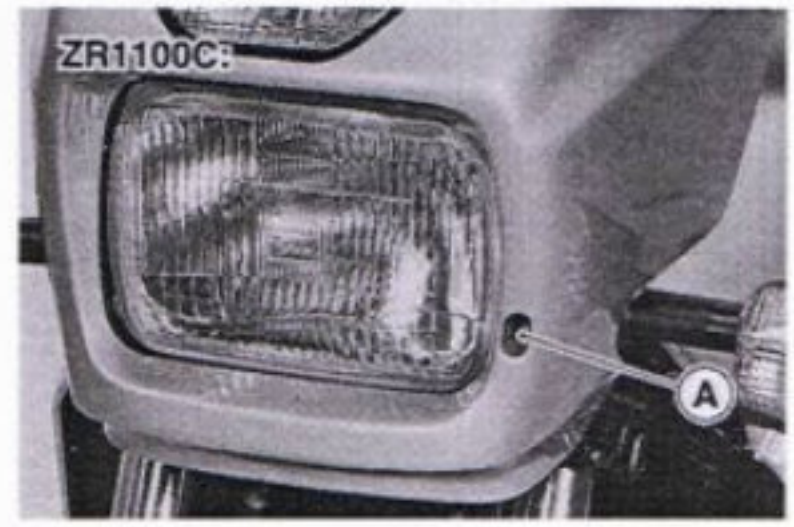

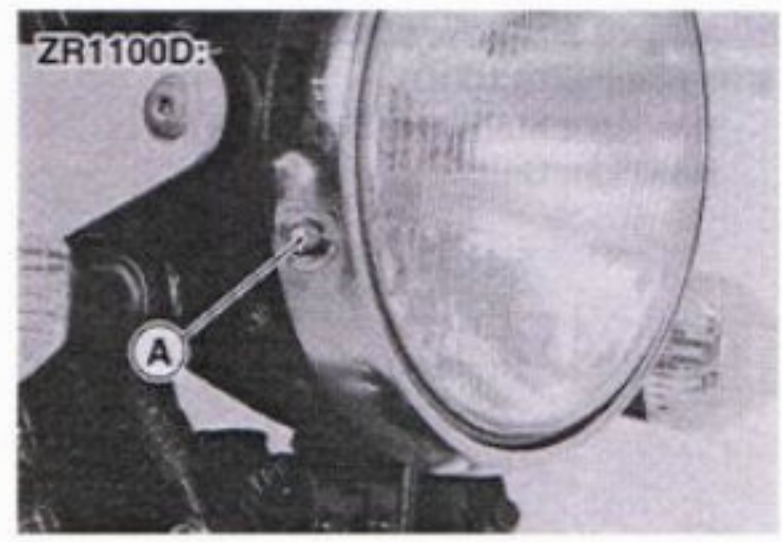

Headlight Beam Vertical Adjustment

- Turn the vertical adjuster [A] on the headlight in or out with a hand to adjust the headlight vertically.

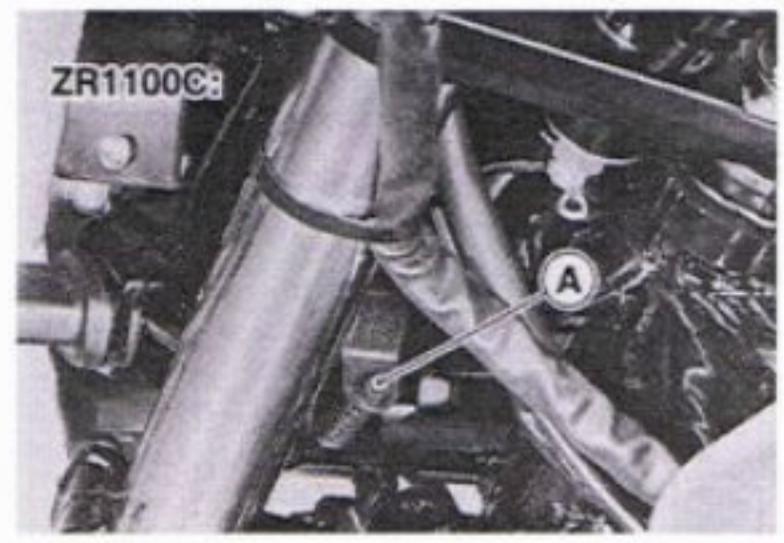

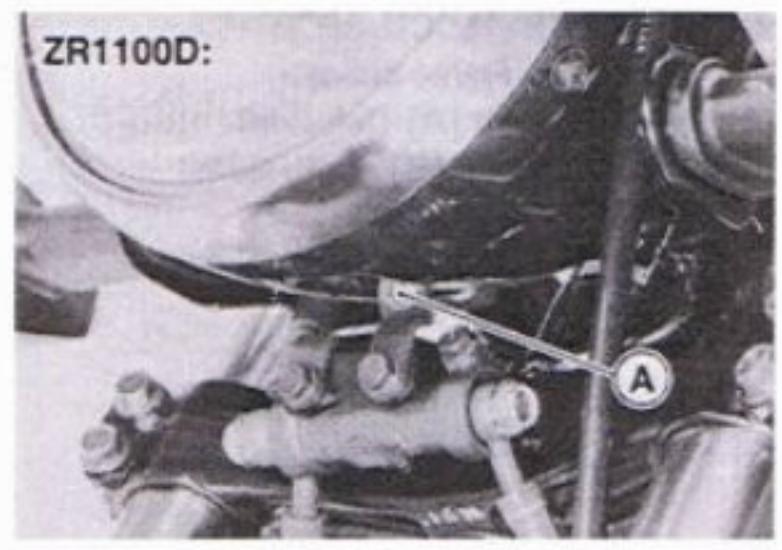

NOTE

○ *On high beam, the brightest points should be slightly below horizontal with the motorcycle on its wheels and the rider seated. Adjust the headlight to the proper angle according to local regulations.*

○ *For US model, the proper angle is 0.4 degrees below horizontal. This is 50 mm (2 in) drop at 7.6 m (25 ft) measured from the center of the headlight with the motorcycle on its wheels and the rider seated.*

50 mm (2 in) [A]
Center of Brightest Spot [B]
7.6 m (25 ft) [C]

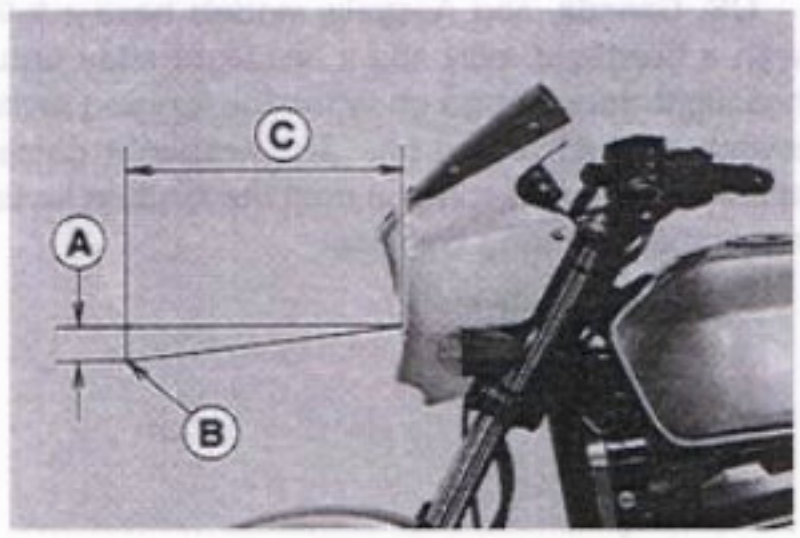

Headlight Bulb Replacement

● Remove: (ZR1100D)
Headlight Mounting Screws [A]
Headlight Unit

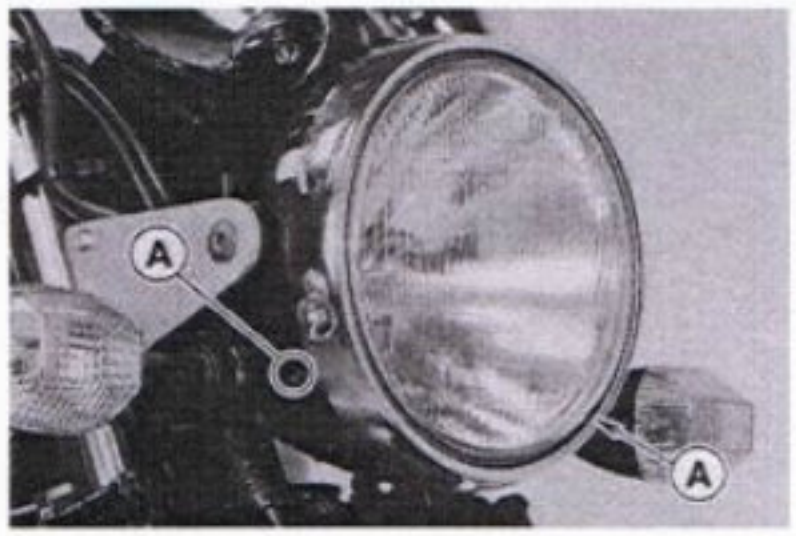

● Remove: (ZR1100D)
Headlight Connector [A]
Headlight Bulb Dust Cover [B]

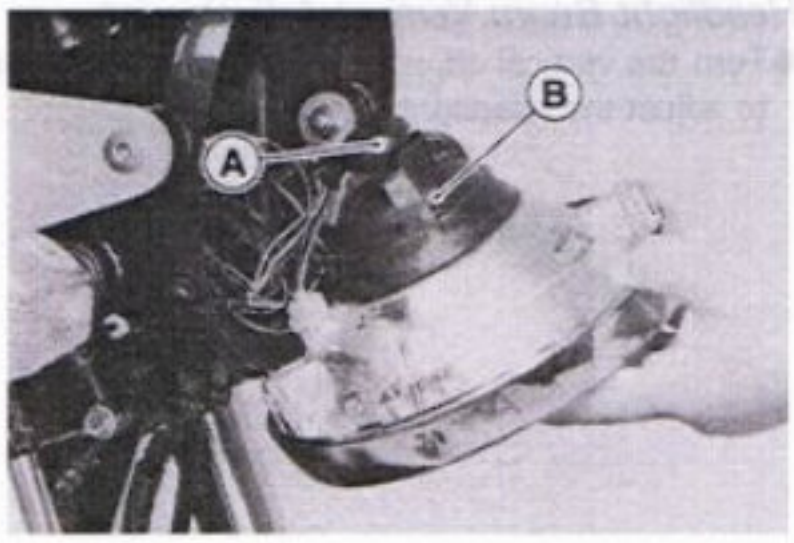

● Remove: (ZR1100C)
Fairing (see Frame chapter)
Mounting Bolt [A] (left side)
Mounting Bolts [B] (both sides)
Headlight Connector
Headlight Bulb Dust Cover [C]

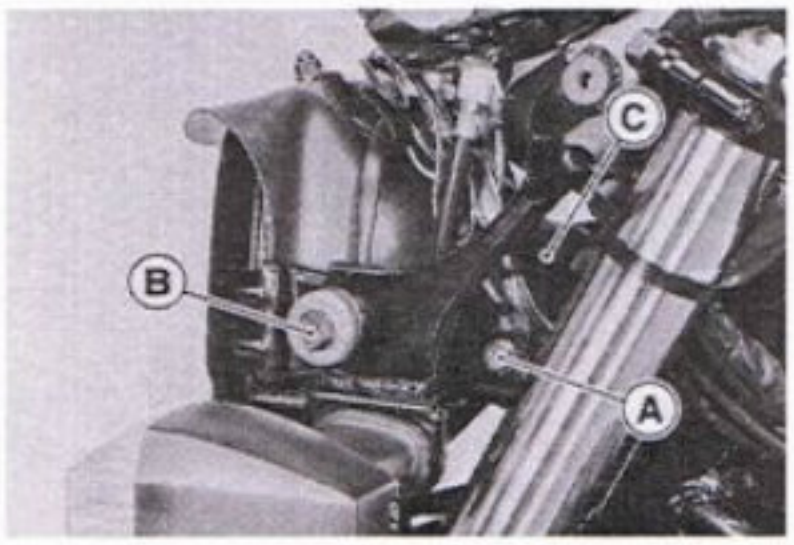

- Remove the hook [A].

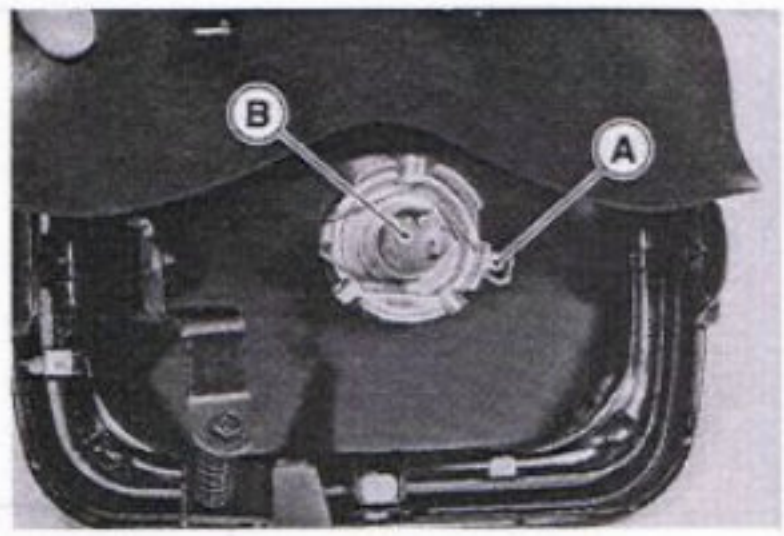

CAUTION

When handling the quartz-halogen bulb, never touch the glass portion with bare hands. Always use a clean cloth. Oil contamination from hands or dirty rags can reduce bulb life or cause the bulb to explode.

NOTE

○ *Clean off any contamination that inadvertently gets on the bulb with alcohol or soap and water solution.*

- Replace the headlight bulb [B].

- Fit the dust cover [A] with the TOP mark [B] upward onto the bulb [C] firmly as shown.
- After installation, adjust the headlight aim (see this chapter).

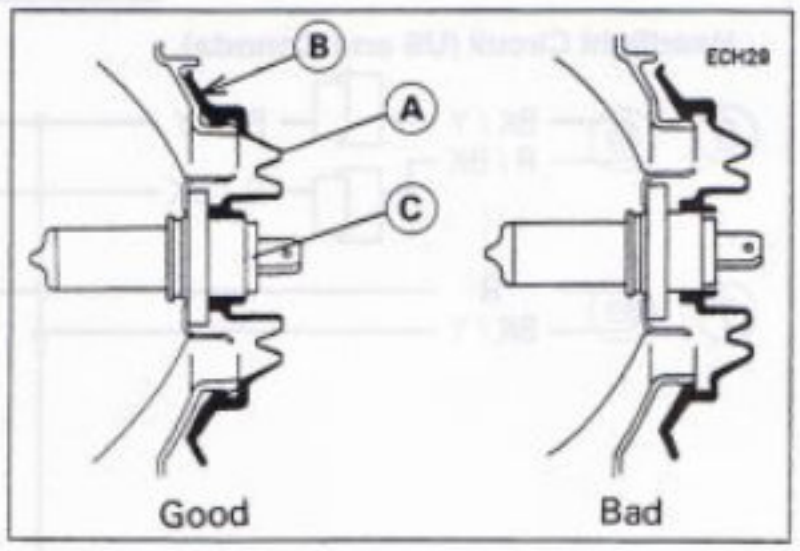

Headlight Circuit

Headlight Circuit (Europe)

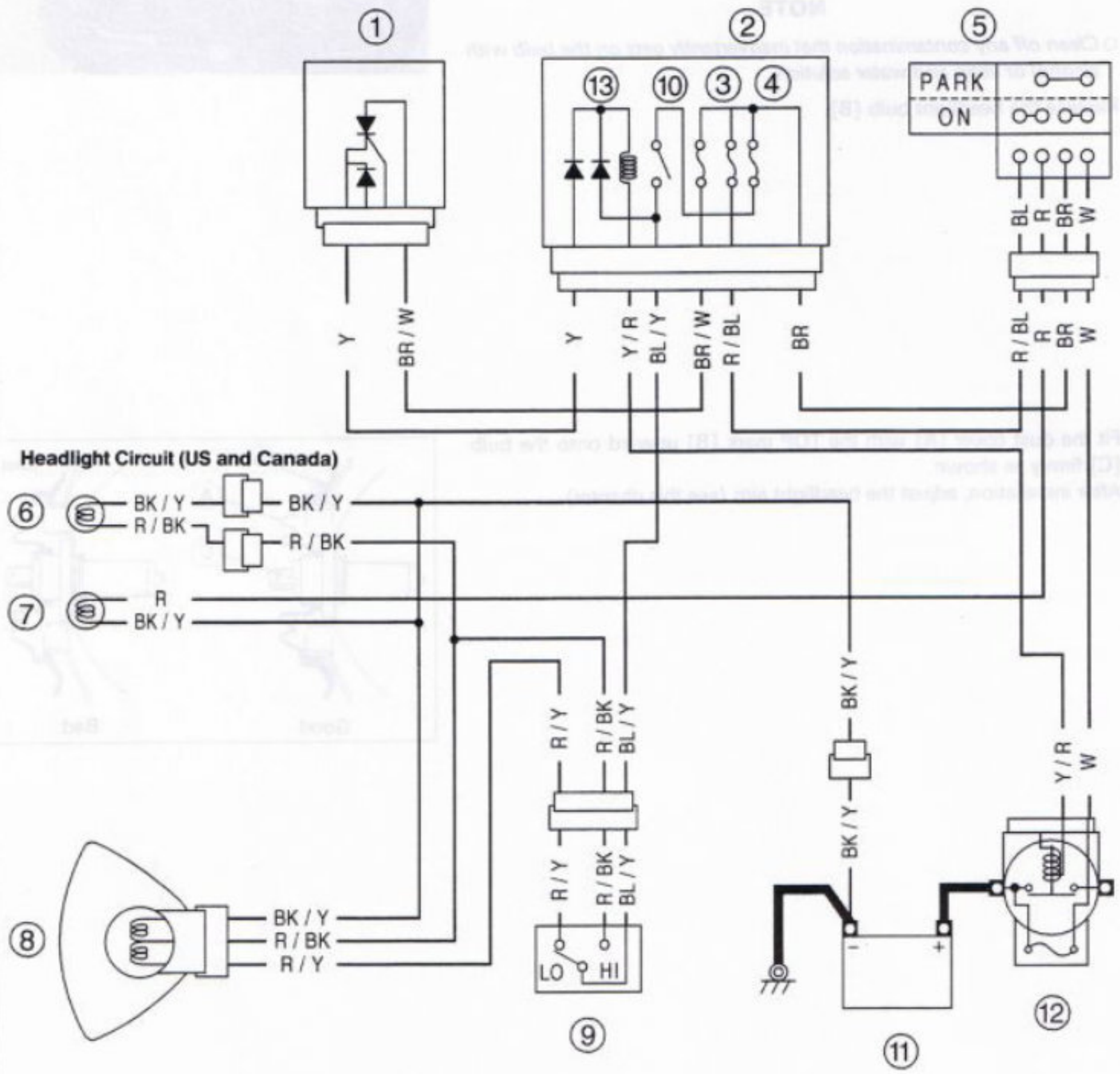

1. Headlight Relay
2. Junction Box
3. Taillight Fuse 10A
4. Headlight Fuse 10A
5. Ignition Switch
6. High Beam Indicator Light
7. Tail & Brake Light
8. Headlight
9. Dimmer Switch
10. Passing Button
11. Battery
12. Main Fuse 30A
13. Headlight Diodes
14. Ignition Fuse 10A

Tail/Brake Light Bulb Replacement

- Remove:
  Seat and Seat Cover (see Frame chapter)
  Turn Signal Relay [A]
- Turn the socket counterclockwise [B] and remove the bulbs and sockets [C].

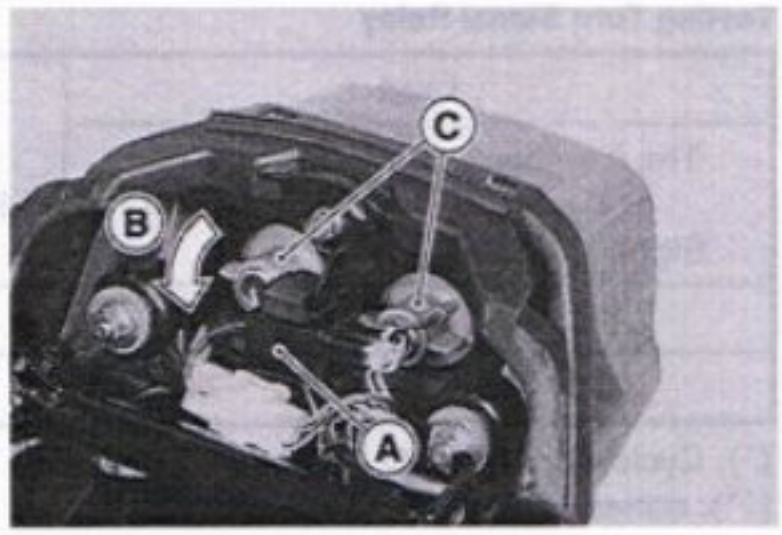

- Push the bulb [A] in the socket and turn the bulb counterclockwise [B].

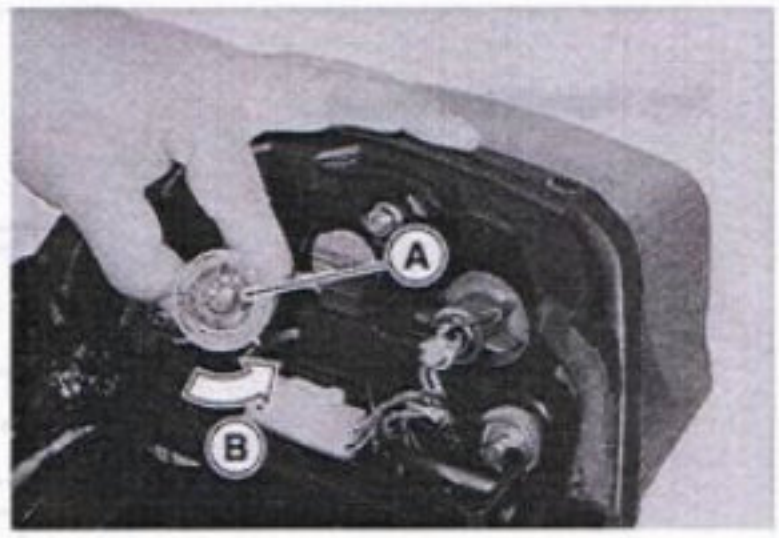

- Insert the new bulb in the socket and turn the bulb clockwise.
- Insert the socket by aligning the projection [A] on the triangular mark [B] with the notch [C] and turn the socket clockwise.

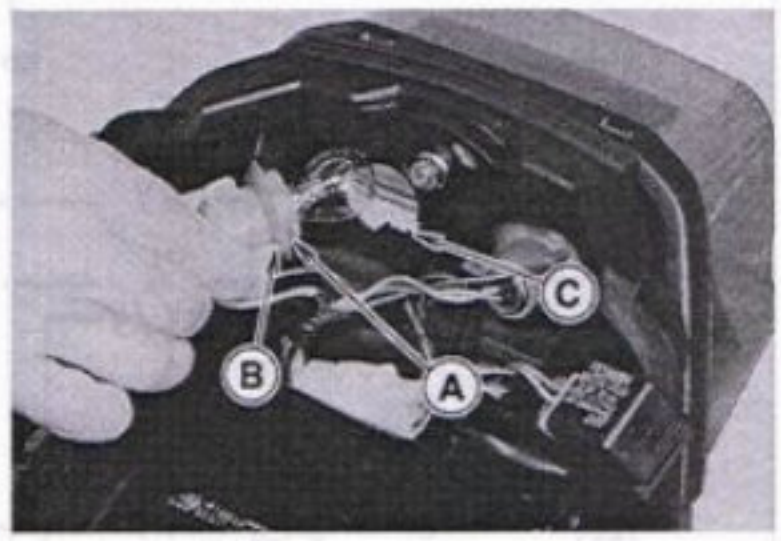

Turn Signal Relay Inspection

- Remove:
  Seat and Seat Cover (see Frame chapter).
  Turn Signal Relay [A]

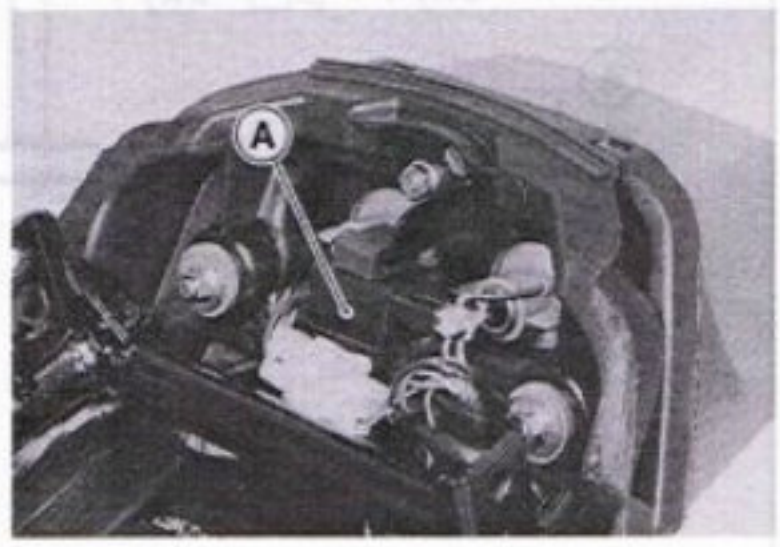

- Connect one 12 V battery and turn signal lights as indicated in the figure, and count how many times the lights flash for one minute.

  Turn Signal Relay [A]
  Turn Signal Lights [B]
  12 V Battery [C]

★If the lights do not flash as specified, replace the turn signal relay.

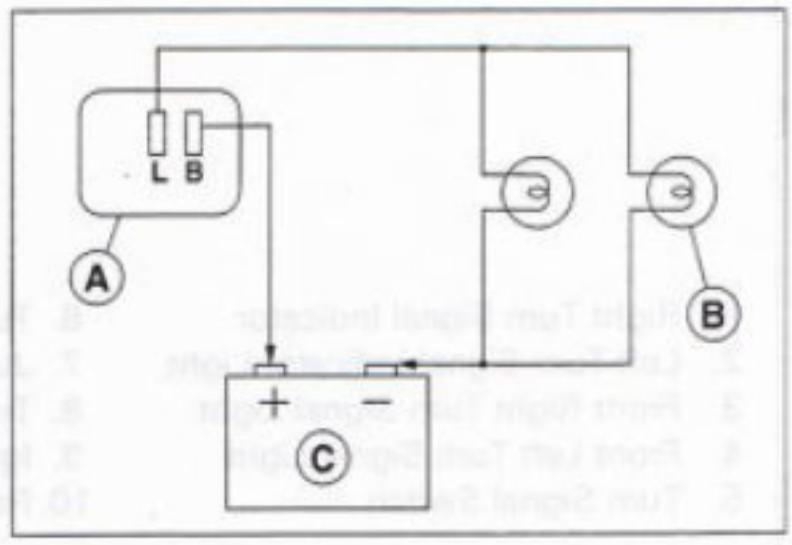

Testing Turn Signal Relay

Load		Flashing times (c/m*)
The Number of Turn Signal Lights	Wattage(W)	
1**	21 – 23	Light stays on
2	42 – 46	75 – 95

(*): Cycle(s) per minute
(**): corresponds to "light burned out".

Turn Signal Light Circuit

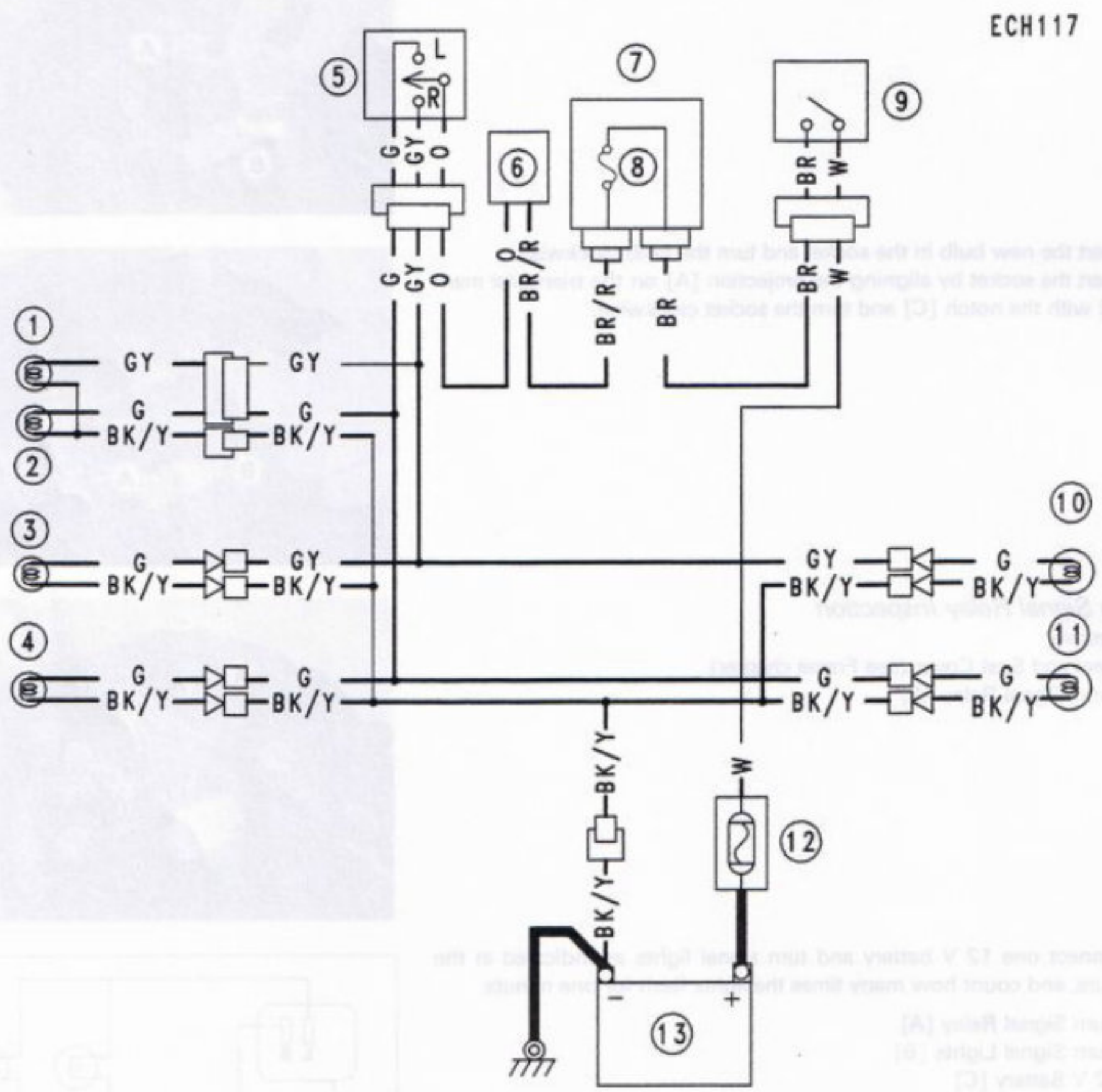

1. Right Turn Signal Indicator
2. Left Turn Signal Indicator Light
3. Front Right Turn Signal Light
4. Front Left Turn Signal Light
5. Turn Signal Switch
6. Turn Signal Relay
7. Junction Box
8. Turn Signal Fuse 10A
9. Ignition Switch
10. Rear Right Turn Signal Light
11. Rear Left Turn Signal Light
12. Main Fuse 30A
13. Battery

Radiator Fan System

Fan System Circuit Inspection

- Remove the fuel tank (see Fuel System chapter).
- Disconnect the 2-pin connector in the radiator fan switch leads.
- Using an auxiliary wire [A], connect the radiator fan switch leads.

★If the fan rotates, inspect the fan switch [B].

★If the fan does not rotate, inspect the following.

Leads and Connectors
Main Fuse and Fan Fuse
Fan Motor

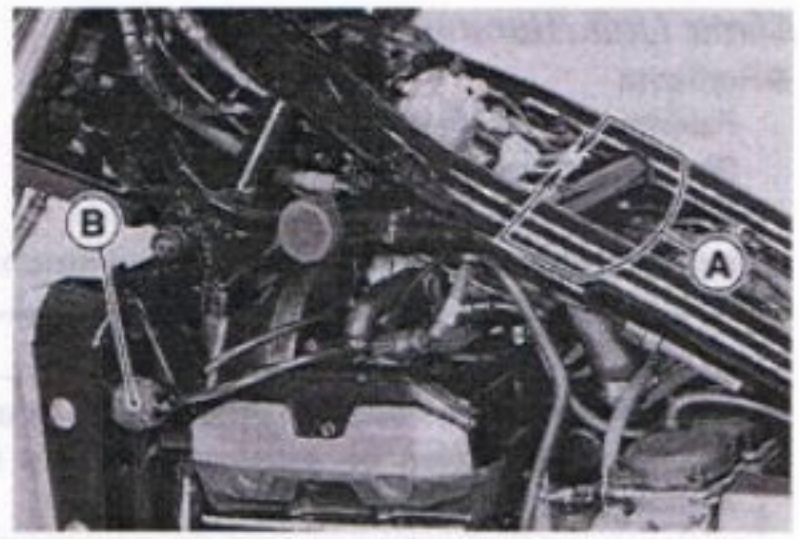

Fan Motor Inspection

- Remove the fuel tank (see Fuel System chapter).
- Disconnect the 2-pin connector [A] in the fan motor leads.
- Using two auxiliary wires, supply battery [B] power to the fan motor.

★If the fan does not rotate, the fan motor is defective and must be replaced.

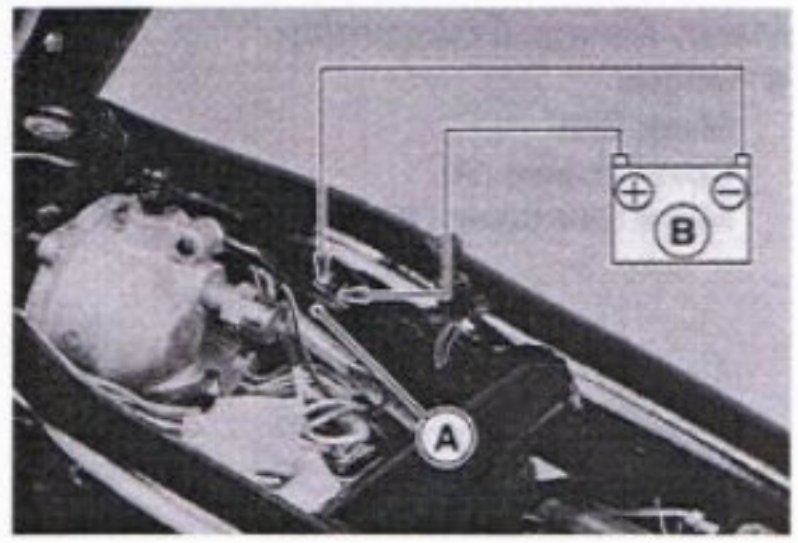

Radiator Fan Circuit

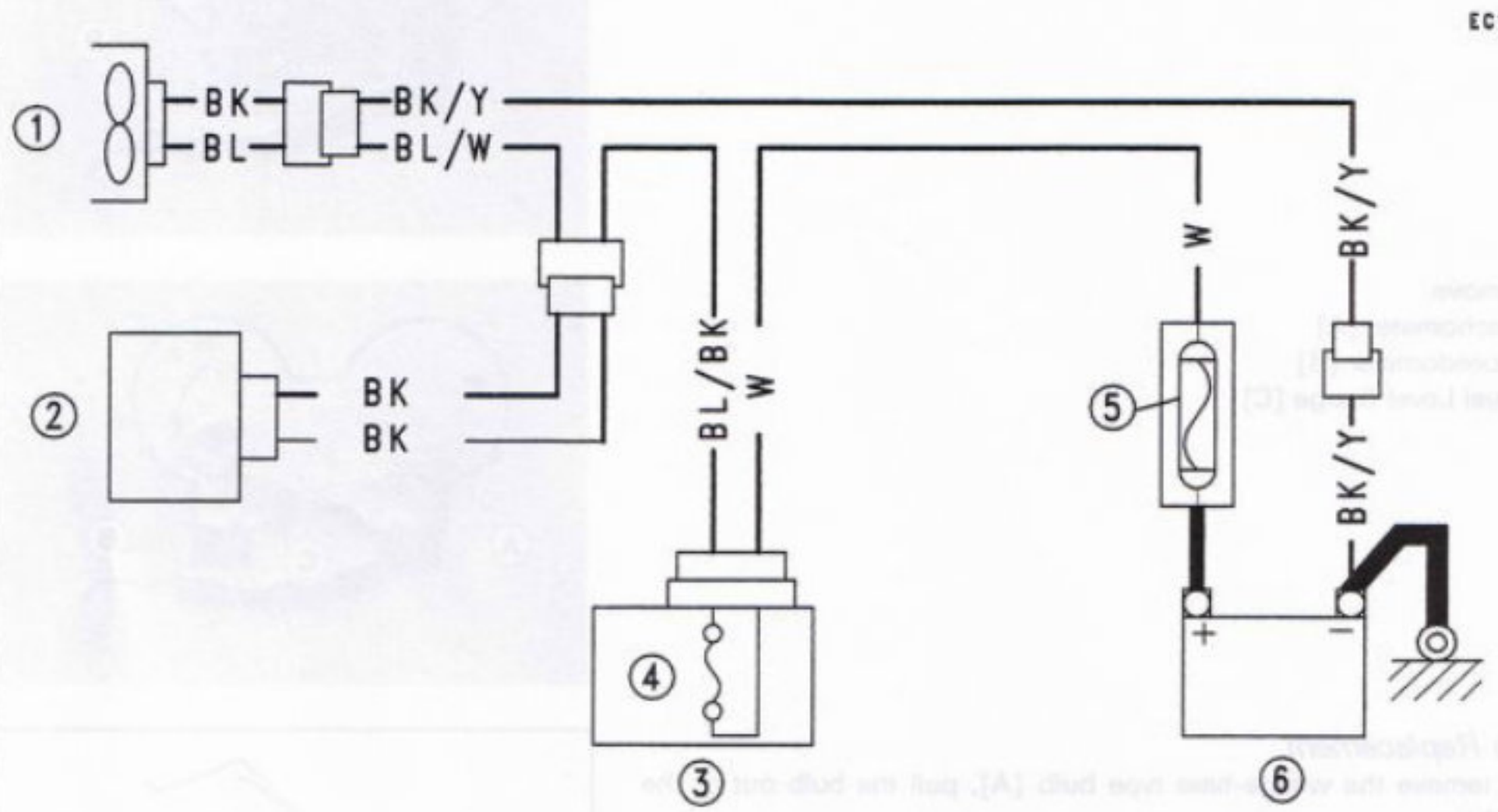

1. Radiator Fan
2. Radiator Fan Switch
3. Junction Box
4. Fan Fuse 10A
5. Main Fuse 30A
6. Battery

Meters, Gauges

Meter Unit Removal

- Remove:
  - Fairing (see Frame chapter)
  - Speedometer Cable Upper End [A]
  - Wiring Connectors
- Remove the meter unit by taking off the mounting nuts [B].

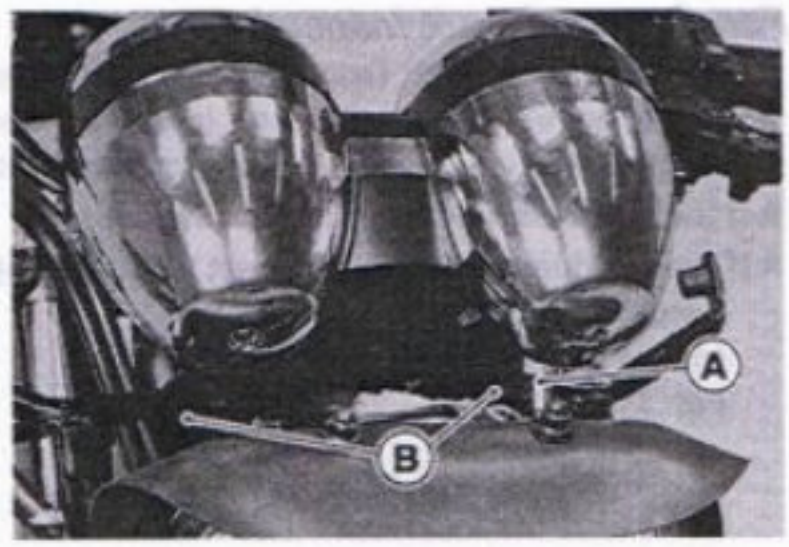

CAUTION
Place the meter or gauge so that the face is up. If a meter or gauge is left upside down or sideways for any length of time, it will malfunction.

Meter, Gauge Disassembly

- Remove:
  - Meter Unit
  - Cover Screws [A]
  - Meter Unit Cover [B]

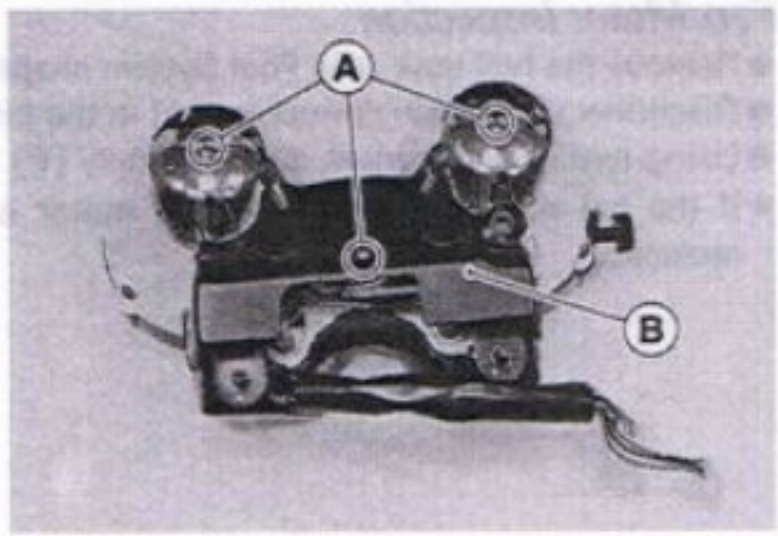

- Remove:
  - Bracket Screws [A]
  - Meter Unit Bracket [B]

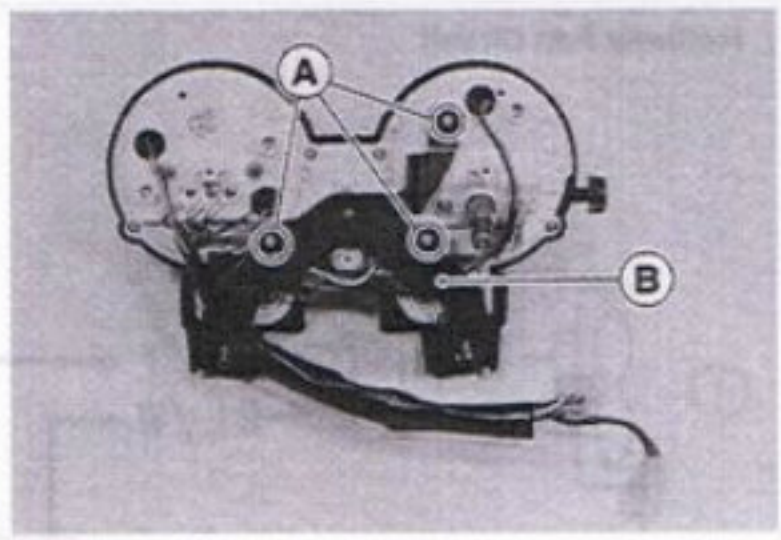

- Remove:
  - Tachometer [A]
  - Speedometer [B]
  - Fuel Level Gauge [C]

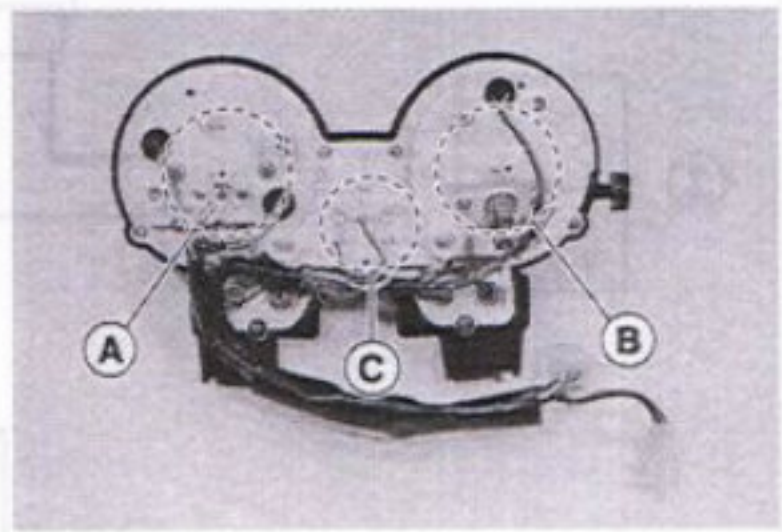

Bulb Replacement

- To remove the wedge-base type bulb [A], pull the bulb out of the socket.

CAUTION
Do not turn the bulb. Pull the bulb out to prevent damage to the bulb. **Do not use bulb rated for greater wattage than the specified value.**

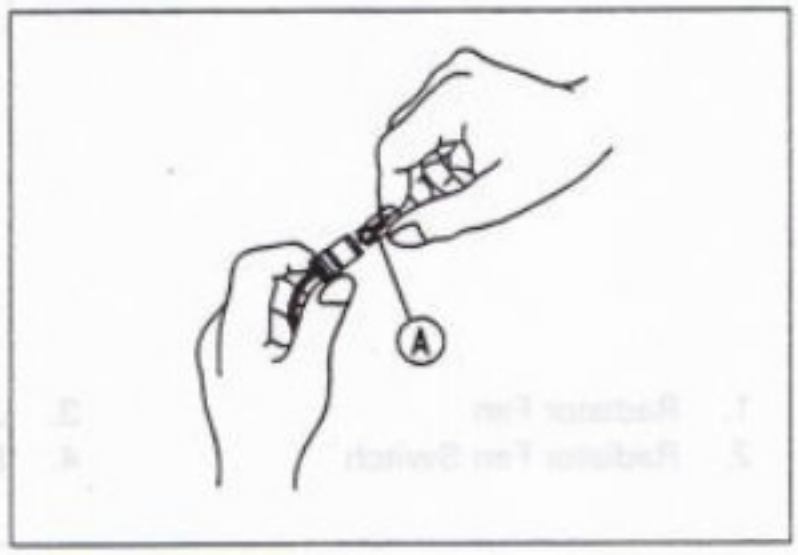

Tachometer Inspection

- ●Check the tachometer circuit wiring (see Wiring Inspection).
- ★If all wiring and components other than the tachometer unit check out good, the unit is suspect. Check the unit as shown.
- ○Remove the fairing (see Frame chapter).
- ○Remove the meter unit cover.
- ○Remove the BK lead [A] and tighten the terminal screw [B] only.
- ○Turn the ignition switch ON.
- ○Using an auxiliary wire [C], open and connect the BR lead terminal [D] to the BK lead terminal [B] repeatedly.

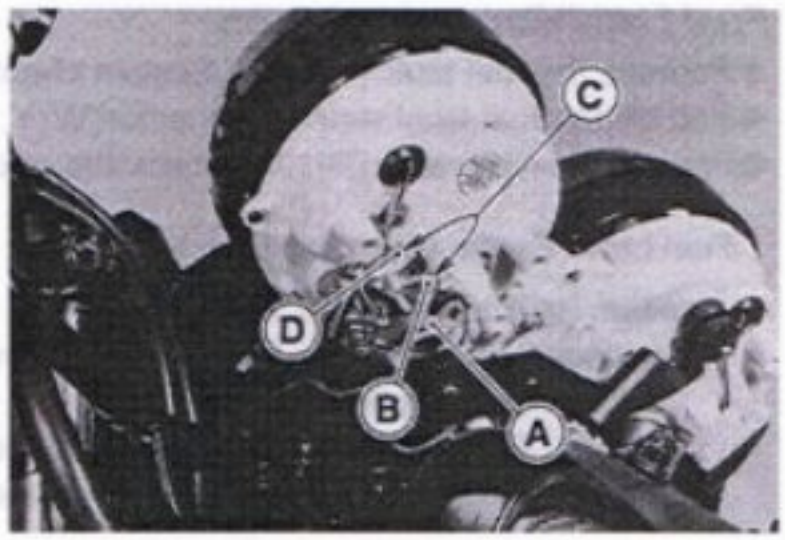

- ○Then the tachometer hand [A] should flick [B].
- ○Turn the ignition switch OFF.
- ★If the hand does not flick, replace the tachometer unit.

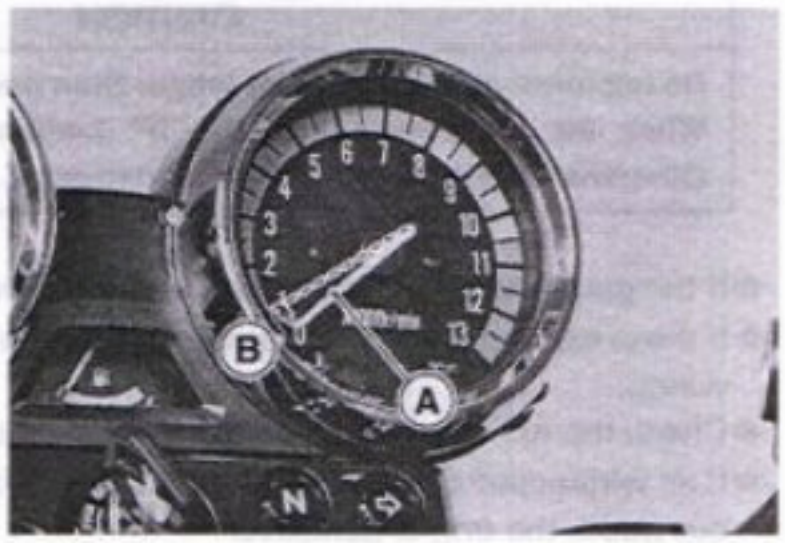

Tachometer Circuit

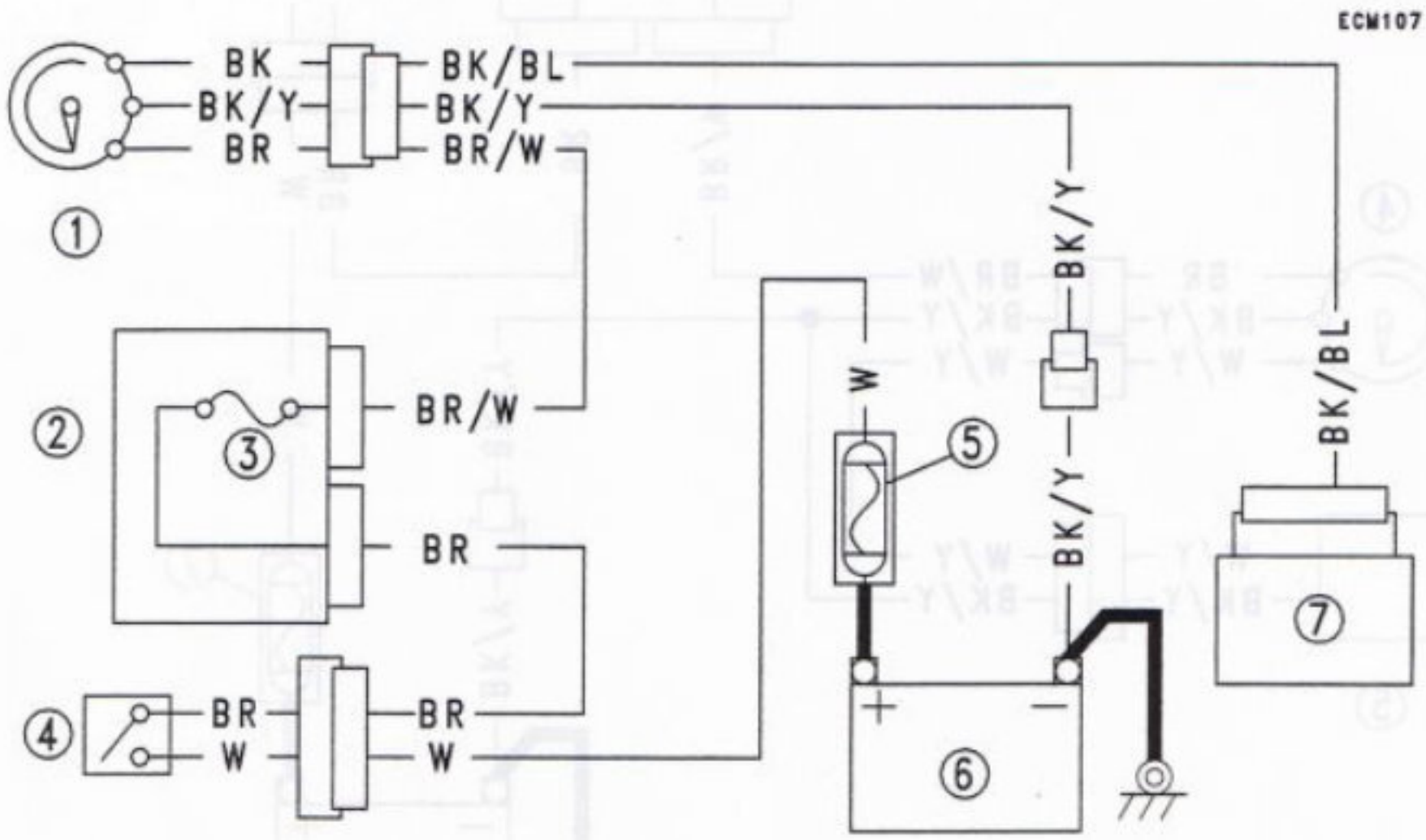

1. Tachometer
2. Junction Box
3. Ignition Fuse 10A
4. Ignition Switch
5. Main Fuse 30A
6. Battery
7. IC Igniter

Fuel Level Gauge Inspection

- Remove the fuel tank (see Fuel System chapter).
- Pull off the fuel level sensor connector(W/Y, BK/Y) [A].
- Prepare auxiliary wire [B], and check the operation of the gauge [C].

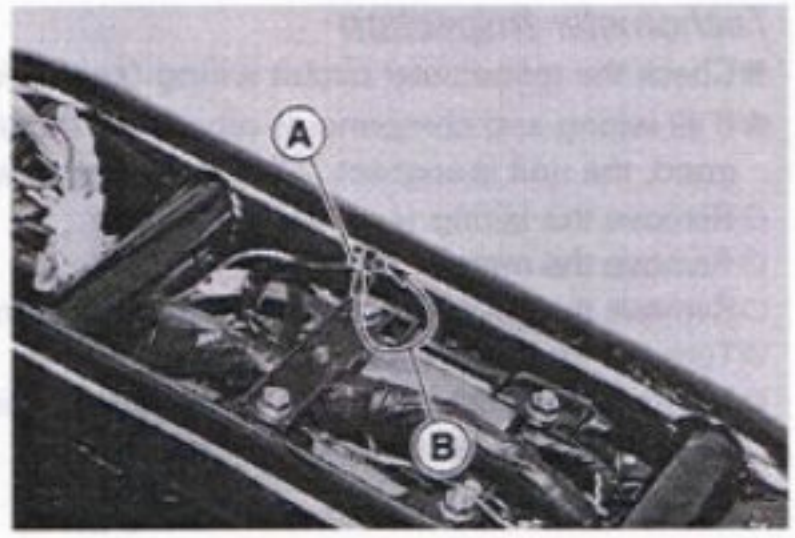

Fuel Level Gauge Operation Check

Ignition Switch Position : ON
Wire Location : Female 2-pin sensor connector (disconnected)
Results: Gauge should read E when connector wires are opened.
Gauge should read F when connector wires are shorted.

CAUTION
Do not short circuit the leads longer than necessary. **When the hand swings to the "F" position, stop short-circuiting.** **Otherwise a good gauge could be damaged.**

★If the gauge readings are correct, the fuel level sensor is bad.
★If these readings are not obtained, the trouble is with the gauge and/or wiring.

- Check the fuel level gauge circuit wiring (see Wiring Inspection).

★If all wiring and components other than the fuel level gauge unit check out good, the unit is defective.

Fuel Level Gauge Circuit

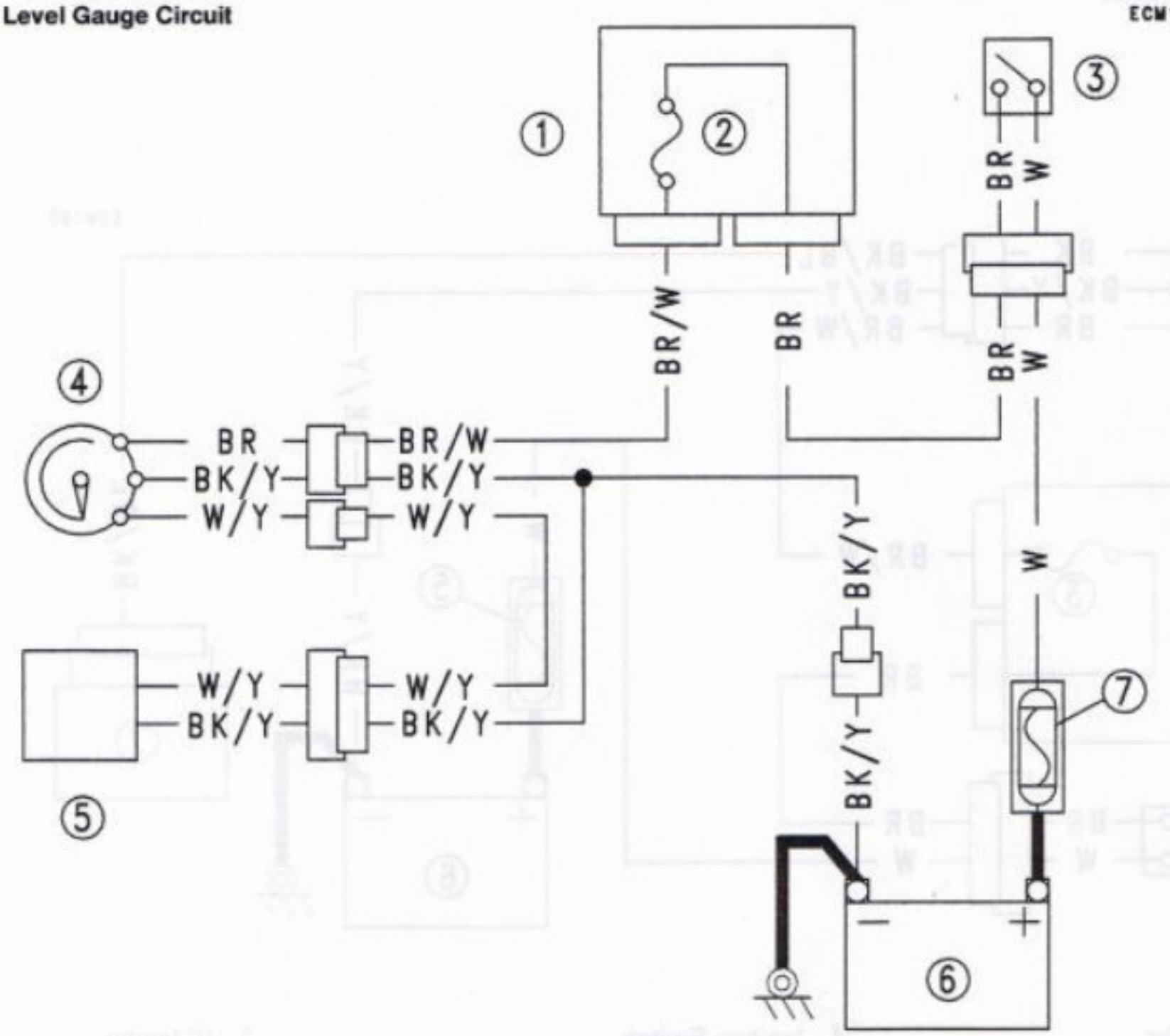

1. Junction Box
2. Ignition Fuse 10A
3. Ignition Switch
4. Fuel Level Gauge
5. Fuel Level Sensor
6. Battery
7. Main Fuse 30A

Switches and Sensors

Brake Light Timing Inspection

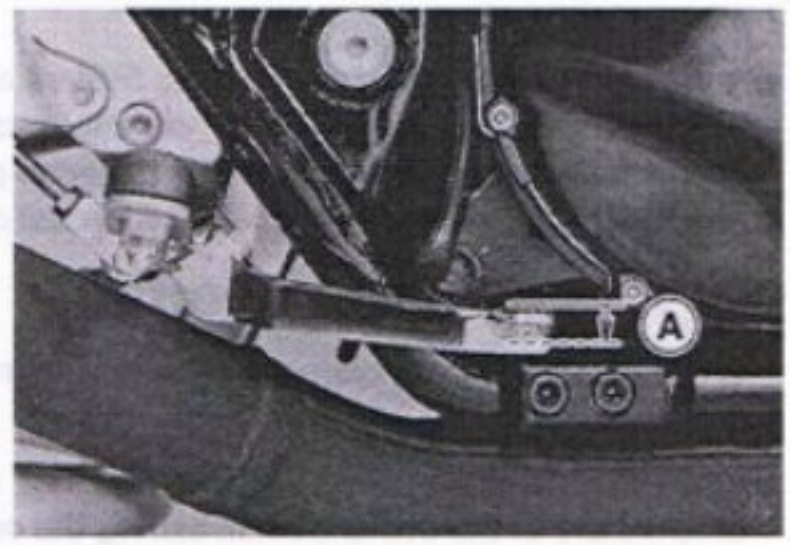

- Turn on the ignition switch.
- Check the operation of the rear brake light switch by depressing the brake pedal.
- If it does not as specified, adjust the brake light timing.

Brake Light Timing
Standard: **On after about 10 mm of pedal travel [A]**

Brake Light Timing Adjustment

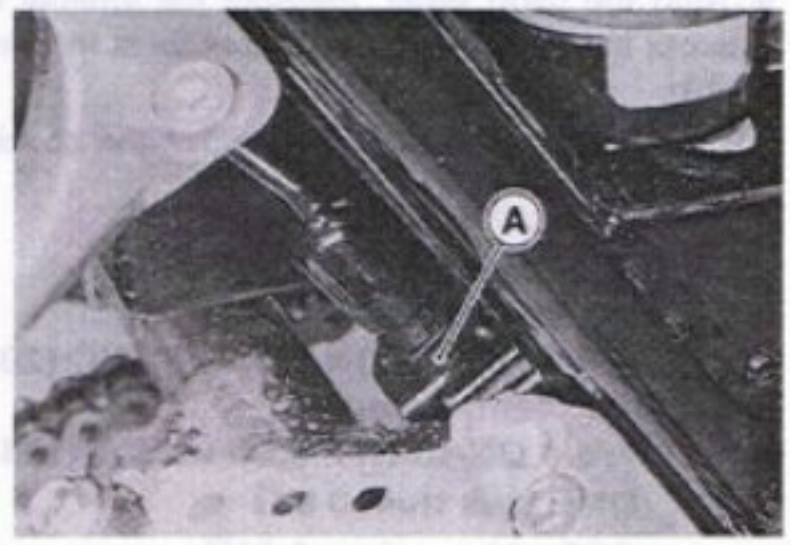

Brake light timing is adjusted by changing the position of the rear brake light switch.

- Adjust the position of the switch so that the brake light goes on after the specified pedal travel by turning the adjusting nut [A].

CAUTION
To avoid damaging the electrical connections inside the switch, be sure that the switch body does not turn during adjustment.

Switch Inspection

- Using a hand tester, check to see that only the connections shown in the table have continuity (about zero ohms).
- ○ For the handlebar switches and the ignition switch, refer to the tables in the Wiring Diagram.
- ★ If the switch has an open or short, repair it or replace it with a new one.

Special Tool – Hand Tester: 57001-1394

Rear Brake Light Switch Connections

	BR	BL
When brake pedal is pushed down	○	○
When brake pedal is released		

Side Stand Switch Connections

	G/W	BK/Y
When side stand is up	○	○
When side stand is down		

Neutral Switch Connections

	SW. Terminal	⏚
When transmission is in neutral	○	○
When transmission is not in neutral		

Oil Pressure Switch Connections*

	SW. Terminal	⏚
When engine is stopped	○	○
When engine is running		

*: Engine lubrication system is in good condition

Radiator Fan Switch Inspection

- Remove the fan switch (see Cooling System chapter).
- Suspend the switch [A] in a container of coolant so that the temperature-sensing projection and threaded portion are submerged.
- Suspend an accurate thermometer [B] in the coolant.

NOTE

○ *The switch and thermometer must not touch the container sides or bottom.*

- Place the container over a source of heat and gradually raise the temperature of the coolant while stirring the coolant gently.
- Using the hand tester, measure the internal resistance of the switch across the terminals in the connector at the temperatures shown in the table.

★If the hand tester does not show the specified values, replace the switch.

Fan Switch Resistance

○ **Rising temperature:**
From OFF to ON @95 ~ 101°C (203 ~ 214°F)

○ **Falling temperature:**
From ON to OFF @90 ~ 96°C (194 ~ 205°F)
ON: Less than 0.5 Ω
OFF: More than 1 MΩ

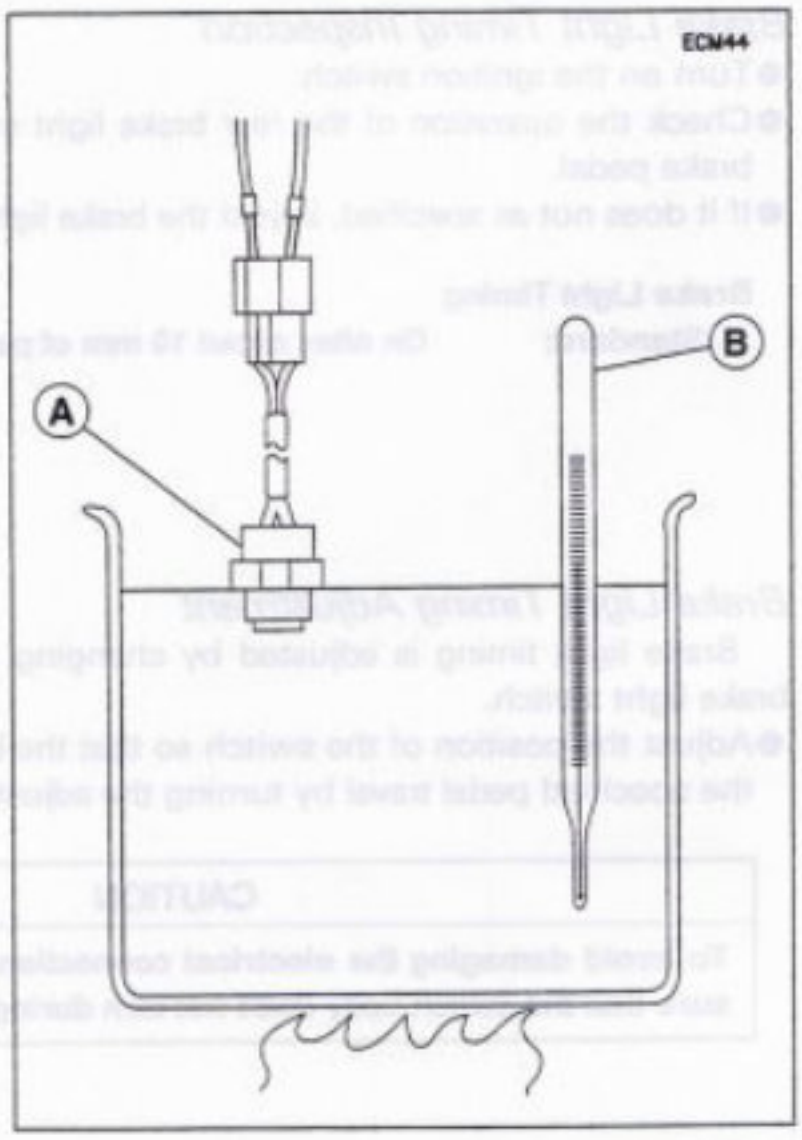

Water Temperature Switch Inspection

- Remove the switch (see Cooling System chapter).
- Suspend the switch [A] in a container of coolant so that the temperature-sensing projection and threaded portion are submerged.
- Suspend an accurate thermometer [B] in the coolant.

NOTE

○ *The switch and thermometer must not touch the container side or bottom.*

- Place the container over a source of heat and gradually raise the temperature of the coolant while stirring the coolant gently.
- Using the hand tester, measure the internal resistance of the switch across the terminal and body at the temperatures shown in the table.

★If the hand tester does not show the specified values, replace the switch.

Water Temperature Switch Resistance

○ **Rising temperature:**
From OFF to ON @112 ~ 118°C (236 ~ 238°F)

○ **Falling temperature:**
From ON to OFF @108 ~ 111°C (227 ~ 234°F)
ON: Less than 0.5 Ω
OFF: More than 1 MΩ

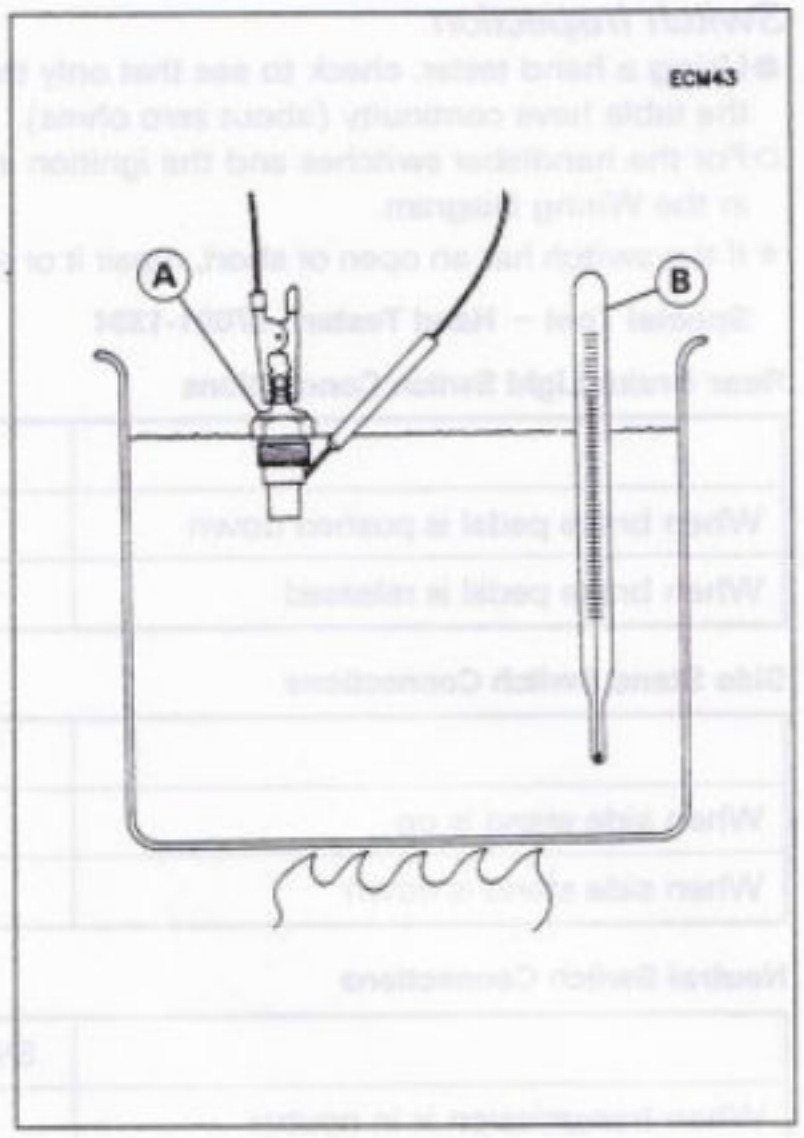

Fuel Level Sensor Inspection

- Remove the fuel tank (see Fuel System chapter).
- Remove the fuel level sensor from the fuel tank.
- Check that the float moves up and down smoothly without binding. It should go down under its own weight.

★If the float does not move smoothly, replace the sensor.

Float in Full Position [A]
Float in Empty Position [B]
Float Arm Stoppers [C]

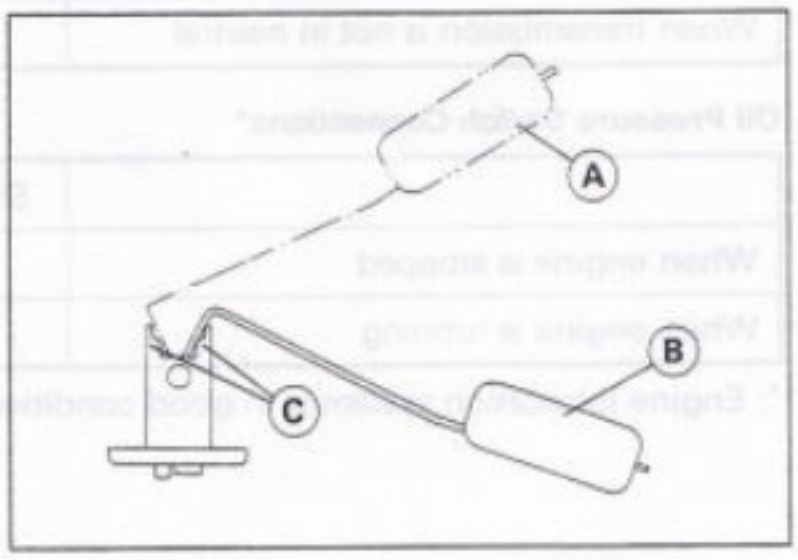

- Using the hand tester [A], measure the resistance across the terminals in the fuel level sensor lead connector [B].

Special Tool – Hand Tester: 57001-1394

★If the tester readings are not as specified, or do not change smoothly according as the float moves up and down, replace the sensor [C].

Fuel Level Sensor Resistance
Standard: Full position: 4 ~ 10 Ω
Empty position: 90 ~ 100 Ω

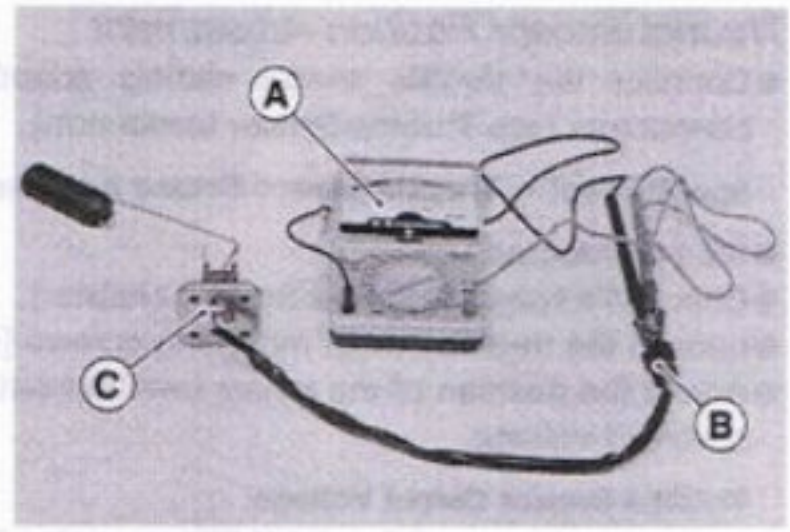

Throttle Sensor Removal/Installation

CAUTION
Do not remove the throttle sensor [A].

- When replacing the sensor, refer to Throttle Sensor Position Adjustment.

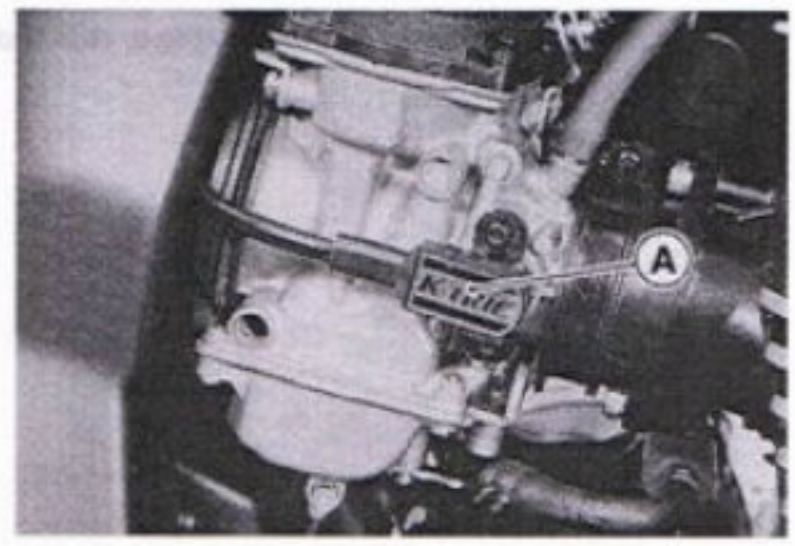

Throttle Sensor Inspection

- Remove the fuel tank (see Fuel System chapter).
- Prepare an auxiliary fuel tank and connect the fuel hose to the carburetors.
- Start the engine and warm it up thoroughly.
- Check:
  Idle Speed (see Fuel System chapter)
  Battery Charging Condition (see this chapter)
- Turn off the ignition switch.
- Remove the throttle sensor lead connector.
- Connect the adapter [A] between the connectors [B].

Special Tool – Throttle Sensor Setting Adapter: 57001-1400

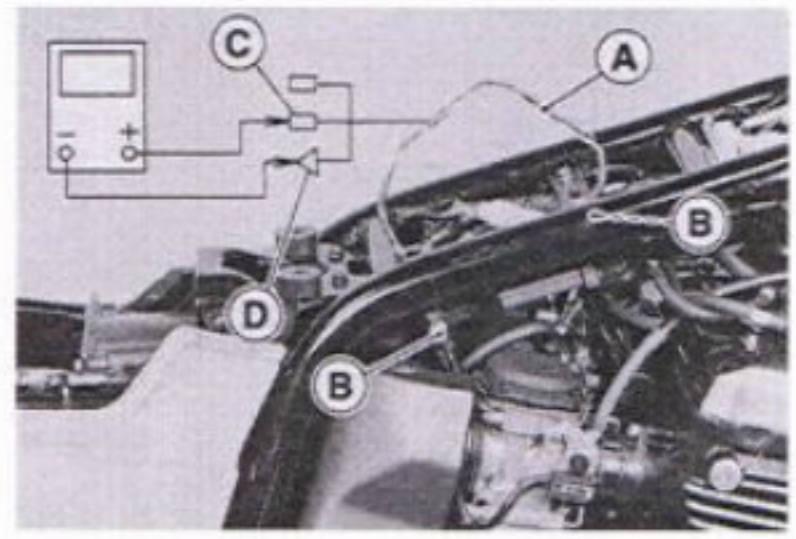

- Connect the hand tester to the adapter.
  Hand Tester (+) → Y/W Lead [C]
  Hand Tester (−) → BK/W Lead [D]
- Start the engine.
- Check the sensor output voltage with the engine idling.

Throttle Sensor Output Voltage
Standard: 0.9 ~ 1.1 V (When engine is idling.)

★If it is not within the specified voltage, adjust the throttle sensor position (see Throttle Sensor Position Adjustment).
★If it is specified voltage, go to next test.
- Stop the engine.
- Turn on the ignition switch.
- Check the sensor output voltage with the throttle fully open.

Throttle Sensor Output Voltage
Standard: 4.06 ~ 4.26 V (When engine is fully opened.)

★If it is not within the specified voltage, replace the sensor.

Throttle Sensor Position Adjustment

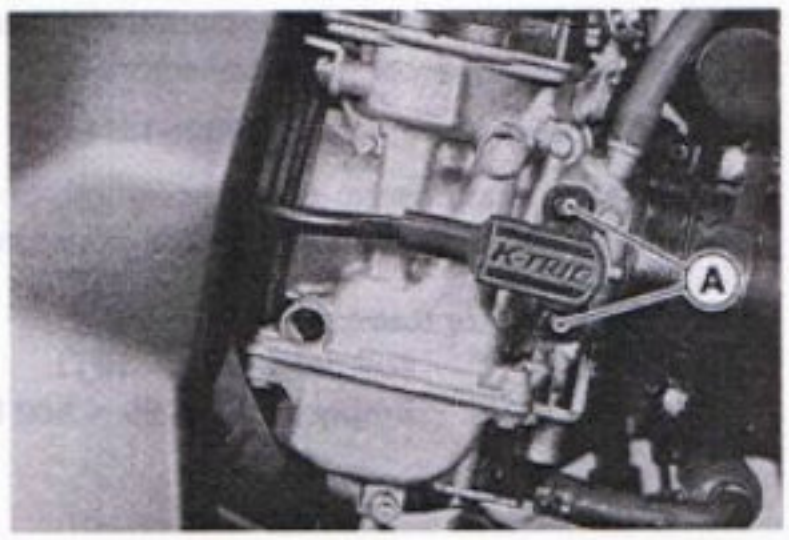

- Connect the throttle sensor setting adapter to the sensor lead connectors (see Throttle Sensor Inspection).

Special Tool – Throttle Sensor Setting Adapter: 57001-1400

- Start the engine.
- Check idle speed (see Fuel System chapter).
- Loosen the throttle sensor mounting screws [A].
- Adjust the position of the sensor until the output voltage is within the specified voltage.

Throttle Sensor Output Voltage
Standard: 0.9 ~ 1.1 V (When engine is idling.)

★If it is not within the specified voltage, replace the sensor.

Junction Box

The junction box [A] has fuses [B], relays, and diodes. The relays and diodes can not be removed.

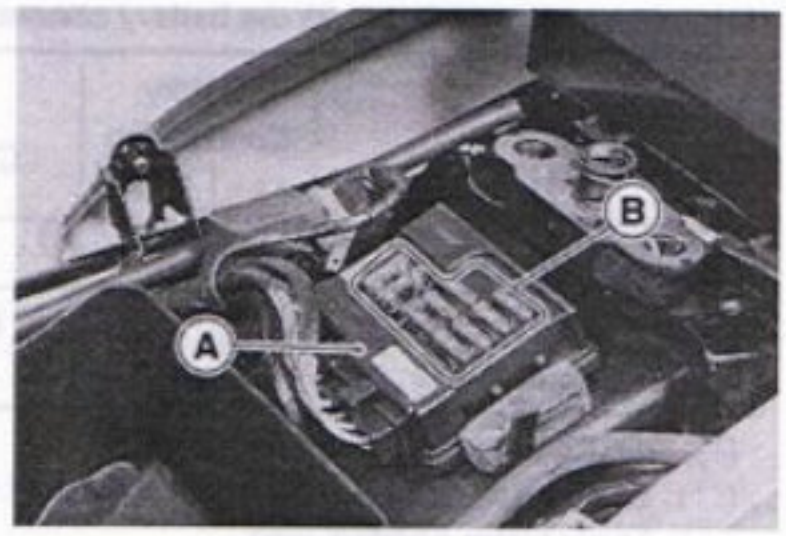

Junction Box Fuse Circuit Inspection

- Remove the seat (see Frame chapter).
- Remove the junction box.
- Pull off the connectors from the junction box.
- Make sure all connector terminals are clean and tight, and none of them have been bent.

★Clean the dirty terminals, and straighten slightly-bent terminals.

- Check conductivity of the numbered terminals with the hand tester.

★If the tester does not read as specified, replace the junction box.

Fuse Circuit Inspection

Tester Connection	Tester Reading (Ω)
1 – 1A	0
1 – 2	0
3A – 4	0
6 – 5	0
6 – 10	0
6 – 7	0
6 – 17	0

Tester Connection	Tester Reading (Ω)
1A – 8	∞
2 – 8	∞
3A – 8	∞
6 – 2	∞
6 – 3A	∞
17 – 3A	∞

Starter Circuit/Headlight Relay Inspection

- Remove the junction box.
- Check conductivity of the following numbered terminals by connecting the hand tester and one 12 V battery to the junction box as shown.

★If the tester does not read as specified, replace the junction box.

Relay Circuit Inspection (with the battery disconnected)

	Tester Connection	Tester Reading (Ω)
Headlight Relay	*7 – 8	∞
	*7 – 13	∞
	(+) (–) *13 – 9	Not ∞ **

	Tester Connection	Tester Reading (Ω)
Starter Circuit Relay	9 – 11	∞
	12 – 13	∞
	(+) (–) 13 – 11	∞
	(+) (–) 12 – 11	Not ∞ **

(*): US, Canada, and Australia Models only
(**): The actual reading varies with the hand tester used.
(+): Apply tester positive lead.
(–): Apply tester negative lead.

Relay Circuit Inspection (with the battery connected)

	Battery Connection (+) (−)	Tester Connection	Tester Reading (Ω)
Headlight Relay	*9 − 13	*7 − 8	0
Starter Circuit Relay	11 − 12	(+) (−) 13 − 11	Not ∞ **

(*): US, Canada, and Australia Models only
(**): The actual reading varies with the hand tester used.
(+): Apply tester positive lead.
(−): Apply tester negative lead.

Diode Circuit Inspection

- Remove the junction box.
- Check conductivity of the following pairs of terminals.

Diode Circuit Inspection

Tester Connection	*13-8, *13-9, 12-11, 12-14, 15-14, 16-14

(*): US, Canada, and Australia Models only

★The resistance should be low in one direction and more than ten times as much in the other direction. If any diode shows low or high in both directions, the diode is defective and the junction box must be replaced.

NOTE

○*The actual meter reading varies with the meter used and the individual diodes, but generally speaking, the lower reading should be from zero to one half the scale.*

Junction Box Internal Circuit (US, Canada, and Australia)

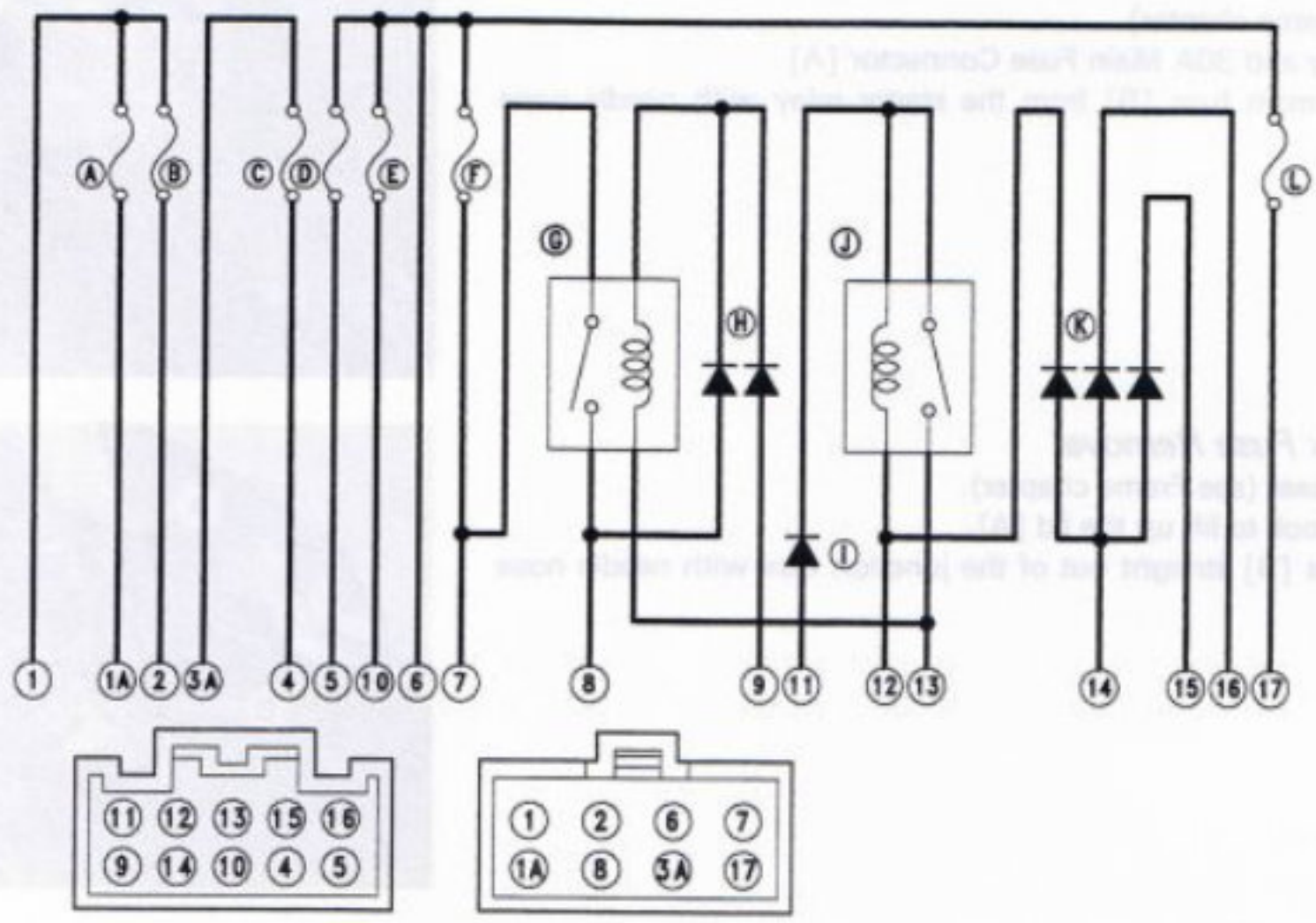

Junction Box Internal Circuit (other than US, Canada, and Australia)

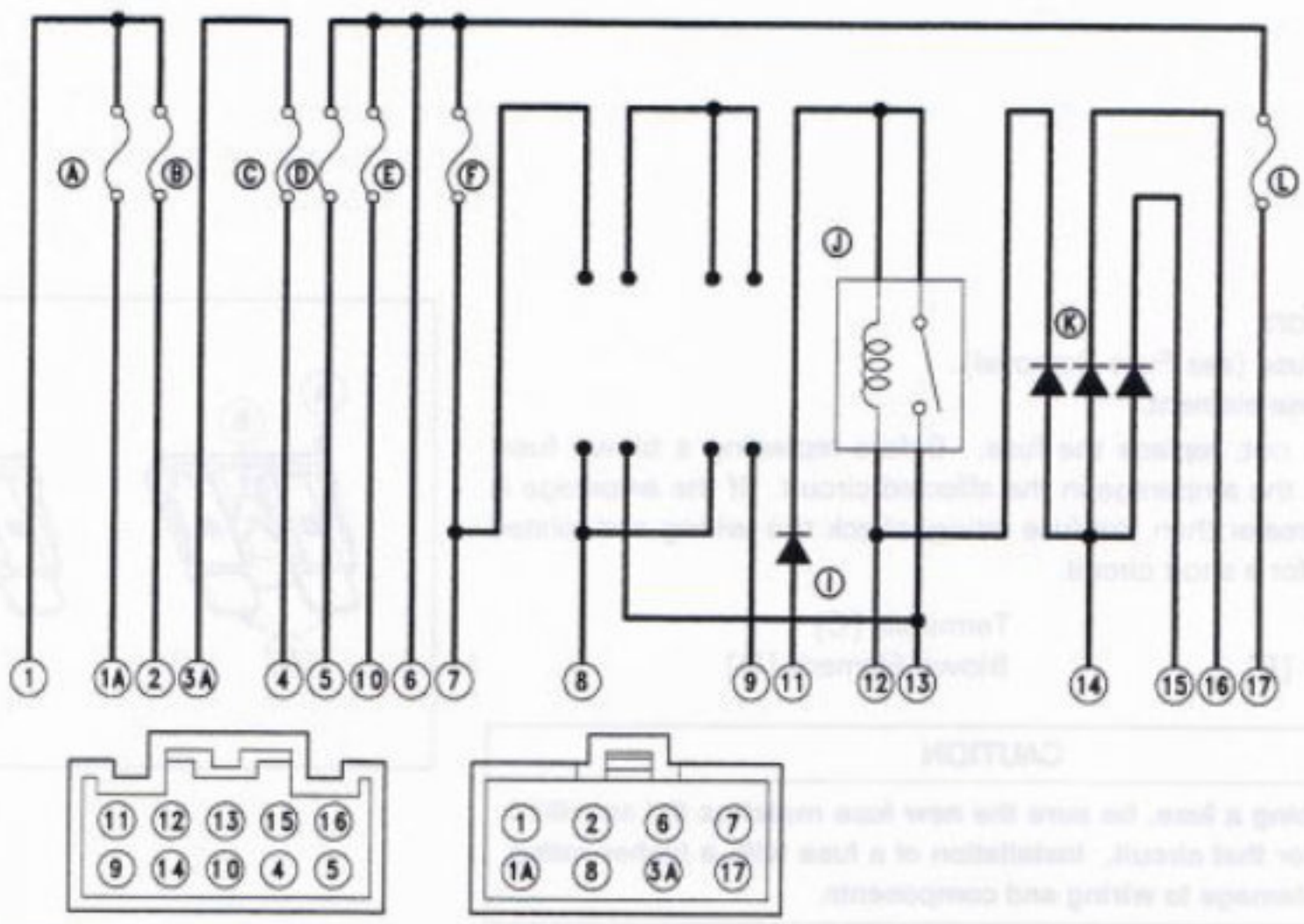

A. Accessory Fuse 10A
B. Fan Fuse 10A
C. Turn Signal Fuse 10A
D. Horn Fuse 10A
E. Ignition Fuse 10A
F. Headlight Fuse 10A
G. Headlight Relay
H. Headlight Diodes
I. Starter Diode
J. Starter Circuit Relay
K. Interlock Diodes
L. Taillight Fuse 10A

Fuse

30A Main Fuse Removal

- Remove:
  Seat (see Frame chapter)
  Starter Relay and 30A Main Fuse Connector [A]
- Pull out the main fuse [B] from the starter relay with needle nose pliers.

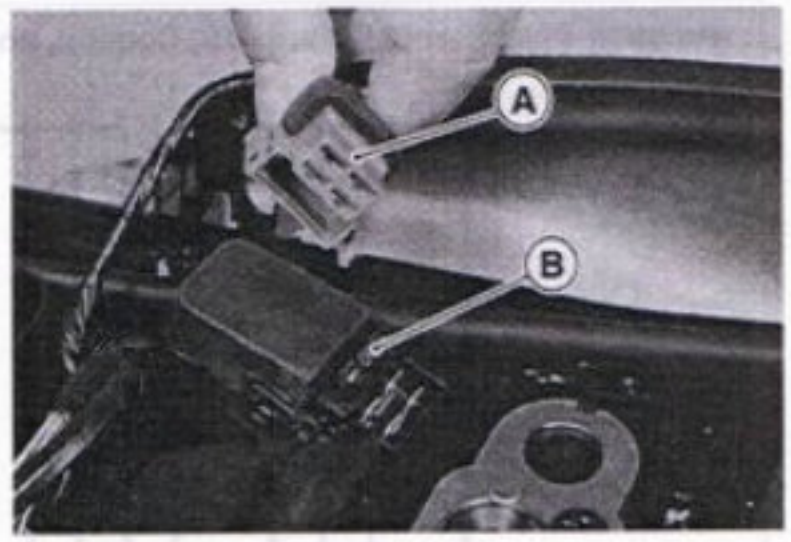

Junction Box Fuse Removal

- Remove the seat (see Frame chapter).
- Unlock the hook to lift up the lid [A].
- Pull the fuses [B] straight out of the junction box with needle nose pliers.

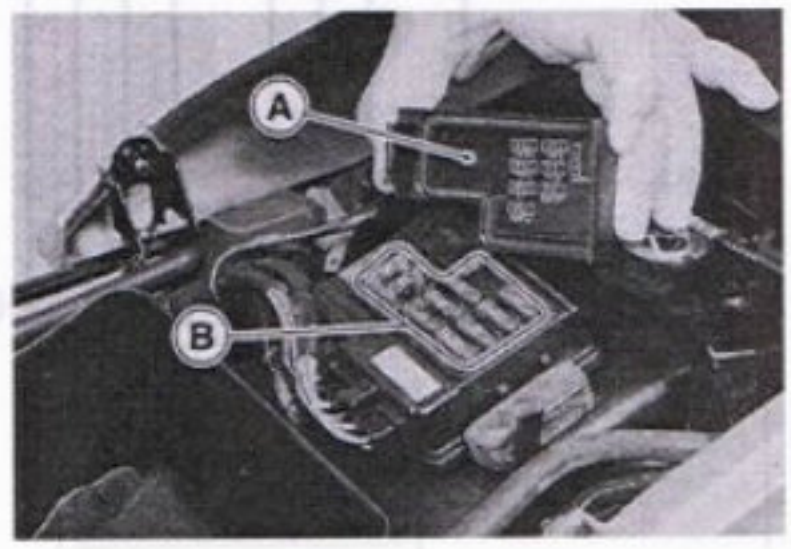

Fuse Installation

- If a fuse fails during operation, inspect the electrical system to determine the cause, and then replace it with a new fuse of proper amperage.
- Install the junction box fuses on the original position as specified on the lid.

Fuse Inspection

- Remove the fuse (see Fuse Removal).
- Inspect the fuse element.

★If it is blown out, replace the fuse. Before replacing a blown fuse, always check the amperage in the affected circuit. If the amperage is equal to or greater than the fuse rating, check the wiring and related components for a short circuit.

Housing [A]
Fuse Element [B]
Terminals [C]
Blown Element [D]

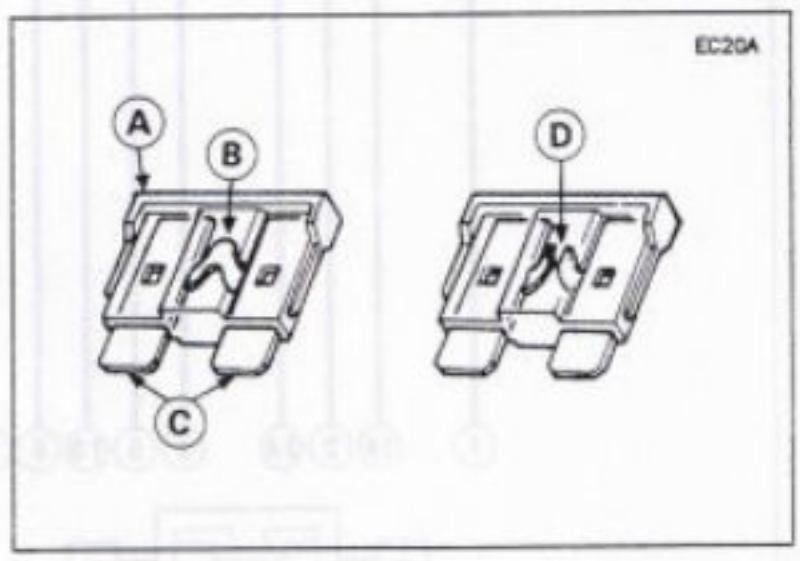

CAUTION

When replacing a fuse, be sure the new fuse matches the specified fuse rating for that circuit. Installation of a fuse with a higher rating may cause damage to wiring and components.

Appendix

Table of Contents

Additional Considerations for Racing 16-2
Carburetor: 16-2
Spark Plug:.....16-2
Spark Plug Inspection 16-3
Troubleshooting Guide 16-4
General Lubrication.....16-8
Lubrication.....16-8
Nut, Bolt, and Fastener Tightness 16-9
Tightness Inspection 16-9
Unit Conversion Table 16-10

Additional Considerations for Racing

This motorcycle has been manufactured for use in a reasonable and prudent manner and as a vehicle only. However, some may wish to subject this motorcycle to abnormal operation, such as would be experienced under racing conditions. KAWASAKI STRONGLY RECOMMENDS THAT ALL RIDERS RIDE SAFELY AND OBEY ALL LAWS AND REGULATIONS CONCERNING THEIR MOTORCYCLE AND ITS OPERATION.

Racing should be done under supervised conditions, and recognized sanctioning bodies should be contacted for further details. For those who desire to participate in competitive racing or related use, the following technical information may prove useful. However, please note the following important notes.

- You are entirely responsible for the use of your motorcycle under abnormal conditions such as racing, and Kawasaki shall not be liable for any damages which might arise from such use.
- Kawasaki's Limited Motorcycle Warranty and Limited Emission Control Systems Warranty specifically exclude motorcycles which are used in competition or related uses. Please read the warranty carefully.
- Motorcycle racing is a very sophisticated sport, subject to many variables. The following information is theoretical only, and Kawasaki shall not be liable for any damages which might arise from alterations utilizing this information.
- When the motorcycle is operated on public roads, it **must** be in its original state in order to ensure safety and compliance with applicable regulations.

Carburetor:

Sometimes an alteration may be desirable for improved performance under special conditions when proper mixture is not obtained after the carburetor has been properly adjusted, and all parts cleaned and found to be functioning properly.

If the engine still exhibits symptoms of overly rich or lean carburetion after all maintenance and adjustments are correctly performed, the main jet can be replaced with a smaller or larger one. A smaller numbered jet gives a leaner mixture and a larger numbered jet a richer mixture.

Spark Plug:

The spark plug ignites the fuel and air mixture in the combustion chamber. To do this effectively and at the proper time, the correct spark plug must be used, and the spark plug must be kept clean and the gap adjusted.

Tests have shown the plug listed in the "General Information" chapter to be the best plug for general use.

Since spark plug requirements change with the ignition and carburetion adjustments and with riding conditions, whether or not a spark plug of the correct heat range is used should be determined by removing and inspecting the plug.

Terminal [A]
Insulator [B]
Cement [C]
Gasket [D]
Center Electrode [E]
Gaps [F]
Reach [G]
Side Electrodes [H]

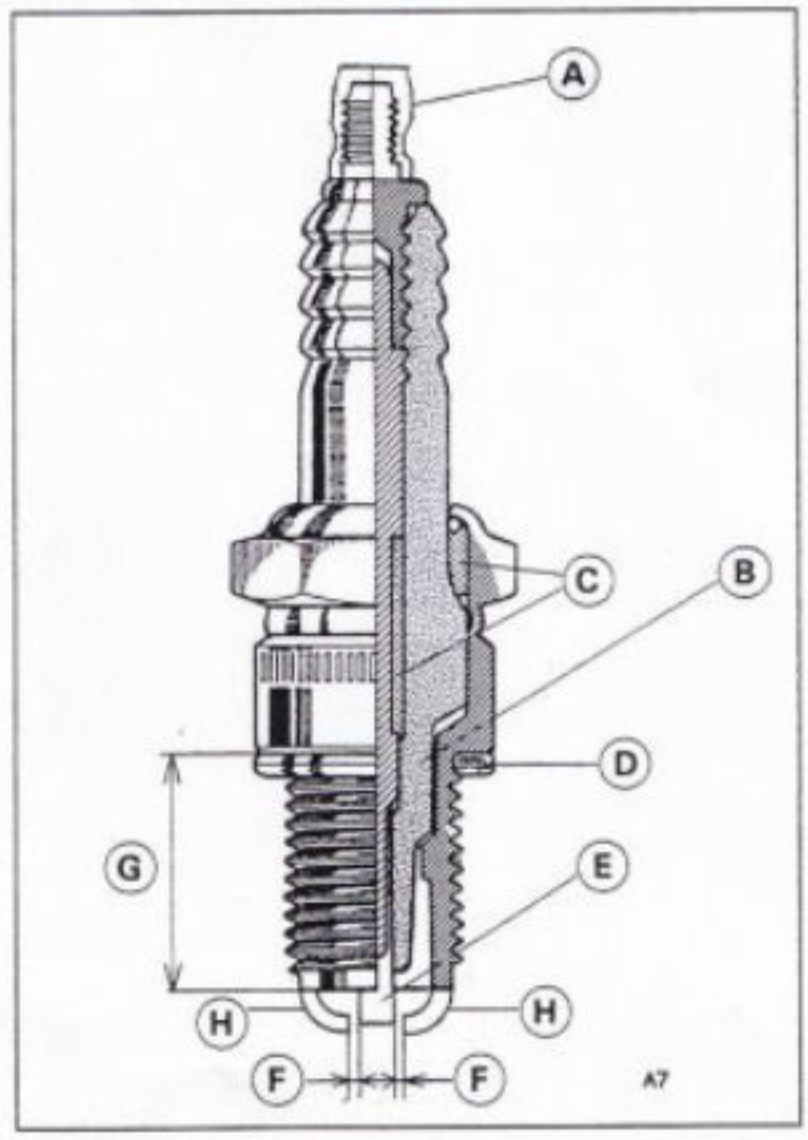

When a plug of the correct heat range is being used, the electrodes will stay hot enough to keep all the carbon burned off, but cool enough to keep from damaging the engine and the plug itself. This temperature is about 400 ~ 800°C (750 ~ 1450°F) and can be judged by noting the condition and color of the ceramic insulator around the center electrode. If the ceramic is clean and of a light brown color, the plug is operating at the right temperature.

A spark plug for higher operating temperatures is used for racing. Such a plug is designed for better cooling efficiency so that it will not overheat and thus is often called a "colder" plug. If a spark plug with too high a heat range is used – that is, a "cold" plug that cools itself too well – the plug will stay too cool to burn off the carbon, and the carbon will collect on the electrodes and the ceramic insulator.

The carbon on the electrodes conducts electricity, and can short the center electrode to ground by either coating the ceramic insulator or bridging across the gap. Such a short will prevent an effective spark. Carbon build-up on the plug can also cause other troubles. It can heat up red-hot and cause preignition and knocking, which may eventually burn a hole in the top of the piston.

Carbon Fouling

Oil Fouling

Normal Operation

Overheating

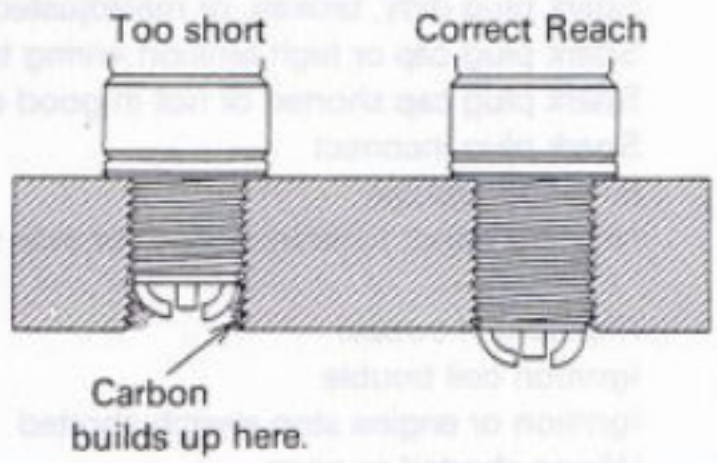

Spark Plug Inspection

- Remove the spark plug and inspect the ceramic insulator.

★ Whether or not the right temperature plug is being used can be ascertained by noting the condition of the ceramic insulator around the electrode. A light brown color indicates the correct plug is being used. If the ceramic is black, it indicates that the plug is firing at too low a temperature, so the next hotter type should be used instead. If the ceramic is white, the plug is operating at too high a temperature and it should be replaced with the next colder type.

CAUTION

If the spark plug is replaced with a type other than the standard plug, make certain the replacement plug has the same thread pitch and reach (length of threaded portion) and the same type electrode (regular type or projected type) as the standard plug.
If the plug reach is too short, carbon will build up on the plug hole threads in the cylinder head, causing overheating and making it very difficult to insert the correct spark plug later.
If the reach is too long, carbon will build up on the exposed spark plug threads causing overheating, preignition, and possibly burning a hole in the piston top. In addition, it may be impossible to remove the plug without damaging the cylinder head.

Standard Spark Plug Threads

Diameter:	**10 mm**
Pitch:	**1.0 mm**
Reach:	**19 mm**

NOTE

○ *The hoat range of the spark plug functions like a thermostat for the engine. Using the wrong type of spark plug can make the engine run too hot (resulting in engine damage) or too cold (with poor performance, misfiring, and stalling).*

Troubleshooting Guide

NOTE

○ *This is not an exhaustive list, giving every possible cause for each problem listed. It is meant simply as a rough guide to assist the troubleshooting for some of the more common difficulties.*

Engine Doesn't Start, Starting Difficulty:

Starter motor not rotating:
- Starter lockout switch or neutral switch trouble
- Starter motor trouble
- Battery voltage low
- Starter relays not contacting or operating
- Starter button not contacting
- Wiring open or shorted
- Ignition switch trouble
- Engine stop switch trouble
- Fuse blown

Starter motor rotating but engine doesn't turn over:
- Starter motor clutch trouble

Engine won't turn over:
- Valve seizure
- Rocker arm seizure
- Cylinder, piston seizure
- Crankshaft seizure
- Connecting rod small end seizure
- Connecting rod big end seizure
- Transmission gear or bearing seizure
- Camshaft seizure
- Alternator shaft bearing seizure
- Starter idle gear seizure
- Balancer bearing seizure

No fuel flow:
- No fuel in tank
- Fuel tank air vent obstructed
- Fuel tap vacuum hose clogged
- Fuel tap clogged
- Fuel line clogged
- Float valve clogged

Engine flooded:
- Fuel level in carburetor float bowl too high
- Float valve worn or stuck open
- Starting technique faulty
- (When flooded, crank the engine with the throttle fully opened to allow more air to reach the engine.)

No spark; spark weak:
- Battery voltage low
- Ignition switch not on
- Engine stop switch turned off
- Clutch lever not pulled in or gear not in neutral
- Spark plug dirty, broken, or maladjusted
- Spark plug cap or high tension wiring trouble
- Spark plug cap shorted or not in good contact
- Spark plug incorrect
- IC igniter trouble
- Neutral, starter lockout switch, or side stand switch trouble
- Pickup coil trouble
- Ignition coil trouble
- Ignition or engine stop switch shorted
- Wiring shorted or open
- Fuse blown

Fuel/air mixture incorrect:
- Pilot screw and/or idle adjusting screw maladjusted
- Pilot jet, or air passage clogged
- Air cleaner clogged, poorly sealed, or missing
- Starter jet clogged

Compression Low:
- Spark plug loose
- Cylinder head not sufficiently tightened down
- No valve clearance
- Cylinder, piston worn
- Piston ring bad (worn, weak, broken, or sticking)
- Piston ring/groove clearance excessive
- Cylinder head gasket damaged
- Cylinder head warped
- Valve spring broken or weak
- Valve not seating properly (valve bent, worn, or carbon accumulation on the seating surface)

Poor Running at Low Speed:

Spark weak:
- Battery voltage low
- Spark plug dirty, broken, or gap maladjusted
- Spark plug cap or high tension wiring trouble
- Spark plug cap shorted or not in good contact
- Spark plug incorrect
- IC igniter trouble
- Pickup coil trouble
- Ignition coil trouble

Fuel/air mixture incorrect:
- Pilot screw maladjusted
- Pilot jet, or air passage clogged
- Air bleed pipe bleed holes or needle jet clogged
- Pilot passage clogged
- Air cleaner clogged, poorly sealed, or missing
- Starter plunger stuck open
- Fuel level in carburetor float bowl too high or too low
- Fuel tank air vent obstructed
- Carburetor holder loose
- Air cleaner duct loose
- Fuel tap clogged
- Air cleaner O-ring damaged

Compression low:
- Spark plug loose
- Cylinder head not sufficiently tightened down
- No valve clearance
- Cylinder, piston worn
- Piston ring bad (worn, weak, broken, or sticking)
- Piston ring/groove clearance excessive
- Cylinder head warped
- Cylinder head gasket damaged
- Valve spring broken or weak
- Valve not seating properly (valve bent, worn, or carbon accumulation on the seating surface)

Other:
- IC igniter trouble
- Carburetors not synchronizing
- Carburetor vacuum piston doesn't slide smoothly
- Carburetor vacuum piston diaphragm damage
- Engine oil viscosity too high
- Drive train trouble

Brake dragging
Over heating
Clutch slipping
Air suction valve trouble
Vacuum switch valve trouble

Poor Running or No Power at High Speed:

Firing incorrect:
- Spark plug dirty, broken, or gap maladjusted
- Spark plug cap or high tension wiring trouble
- Spark plug cap shorted or not in good contact
- Spark plug incorrect
- IC igniter trouble
- Pickup coil trouble
- Ignition coil trouble

Fuel/air mixture incorrect:
- Starter plunger stuck open
- Main jet clogged or wrong size
- Jet needle or needle jet worn
- Air jet clogged
- Fuel level in carburetor float bowl too high or too low
- Air bleed pipe bleed holes or needle jet clogged
- Air cleaner clogged, poorly sealed, or missing
- Air cleaner duct loose
- Air cleaner O-ring damaged
- Starter Plunger stuck open
- Fuel to carburetor insufficient
- Water or foreign matter in fuel
- Carburetor holder loose
- Fuel tank air vent obstructed
- Fuel tap clogged
- Fuel line clogged

Compression low:
- Spark plug loose
- Cylinder head not sufficiently tightened down
- No valve clearance
- Cylinder, piston worn
- Piston ring bad (worn, weak, broken, or sticking)
- Piston ring/groove clearance excessive
- Cylinder head gasket damaged
- Cylinder head warped
- Valve spring broken or weak
- Valve not seating properly (valve bent, worn, or carbon accumulation on the seating surface.)

Knocking:
- Carbon built up in combustion chamber
- Fuel poor quality or incorrect
- Spark plug incorrect
- IC igniter trouble

Miscellaneous:
- Throttle valve won't fully open
- Carburetor vacuum piston doesn't slide smoothly
- Carburetor vacuum piston diaphragm damaged
- Brake dragging
- Clutch slipping
- Overheating
- Engine oil level too high
- Engine oil viscosity too high
- Drive train trouble
- Air suction valve trouble
- Vacuum switch valve trouble
- Balancer mechanism malfunctioning

Overheating:

Firing incorrect:
- Spark plug dirty, broken, or maladjusted
- Spark plug incorrect
- IC igniter trouble

Fuel/air mixture incorrect:
- Main jet clogged or wrong size
- Fuel level in carburetor float bowl too low
- Carburetor holder loose
- Air cleaner duct loose
- Air cleaner poorly sealed, or missing
- Air cleaner O-ring damaged
- Air cleaner clogged

Compression high:
- Carbon built up in combustion chamber

Engine load faulty:
- Clutch slipping
- Engine oil level too high
- Engine oil viscosity too high
- Drive train trouble
- Brake dragging

Lubrication inadequate:
- Engine oil level too low
- Engine oil poor quality or incorrect

Coolant incorrect:
- Coolant level too low
- Coolant deteriorated
- Wrong coolant mixed ratio

Cooling system component incorrect:
- Radiator clogged
- Thermostat trouble
- Radiator cap trouble
- Radiator fan switch trouble
- Fan motor broken
- Fan blade damaged
- Water pump not turning
- Water pump impeller damaged

Over Cooling:

Cooling system component incorrect:
- Radiator fan switch trouble
- Thermostat trouble

Clutch Operation Faulty:

Clutch slipping:
- Friction plate worn or warped
- Steel plate worn or warped
- Clutch spring broken or weak
- Clutch slave cylinder trouble
- Clutch hub or housing unevenly worn

Clutch not disengaging properly:
- Clutch plate warped or too rough
- Clutch spring compression uneven
- Engine oil deteriorated
- Engine oil viscosity too high
- Engine oil level too high
- Clutch housing frozen on drive shaft
- Clutch slave cylinder trouble
- Clutch hub nut loose
- Air in clutch fluid line
- Clutch hub spline damaged

Clutch friction plate installed wrong
Clutch fluid leakage
Clutch fluid deteriorated
Clutch master cylinder primary or secondary cup damaged
Clutch master cylinder scratched inside

Gear Shifting Faulty:

Doesn't go into gear; shift pedal doesn't return:
Clutch not disengaging
Shift fork bent or seized
Gear stuck on the shaft
Gear set lever binding
Neutral set lever binding
Shift return spring weak or broken
Shift return spring pin loose
Shift mechanism arm spring broken
Shift mechanism arm broken
Shift pawl broken

Jumps out of gear:
Shift fork ear worn, bent
Gear groove worn
Gear dogs and/or dog holes worn
Shift drum groove worn
Gear set lever spring weak or broken
Shift fork guide pin worn
Drive shaft, output shaft, and/or gear splines worn

Overshifts:
Gear set lever spring weak or broken
Shift mechanism arm spring broken

Abnormal Engine Noise:

Knocking:
IC igniter trouble
Carbon built up in combustion chamber
Fuel poor quality or incorrect
Spark plug incorrect
Overheating

Piston slap:
Cylinder/piston clearance excessive
Cylinder, piston worn
Connecting rod bent
Piston pin, piston pin hole worn

Valve noise:
Valve clearance incorrect
Valve spring broken or weak
Camshaft bearing portion worn

Other noise:
Connecting rod small end clearance excessive
Connecting rod big end clearance excessive
Piston ring worn, broken, or stuck
Piston seizure, damage
Cylinder head gasket leaking
Exhaust pipe leaking at cylinder head connection
Crankshaft runout excessive
Engine mounts loose
Crankshaft bearings worn
Primary gear worn or chipped
Camshaft chain tensioner trouble
Camshaft chain, sprocket, guide worn
Air suction valve damaged
Vacuum switch valve damaged
Balancer gear worn or chipped
Balancer shaft position maladjusted
Balancer bearing worn
Balancer or alternator shaft coupling rubber damper damaged
Alternator coupling rubber damper damaged
Alternator chain tensioner trouble
Alternator chain, sprocket, guide worn

Abnormal Drive Train Noise:

Clutch noise:
Clutch rubber damper weak or damaged
Clutch housing finger/friction plate tang clearance excessive
Clutch housing gear worn
Wrong installation of outside friction plate

Transmission noise:
Bearings worn
Transmission gears worn or chipped
Metal chips jammed in gear teeth
Engine oil insufficient

Drive chain noise:
Drive chain adjusted improperly
Drive chain worn
Rear and/or engine sprocket worn
Chain lubrication insufficient
Rear wheel misaligned

Abnormal Frame Noise:

Front fork noise:
Oil insufficient or too thin
Spring weak or broken

Rear shock absorber noise:
Shock absorber damaged

Disc brake noise:
Pad installed incorrectly
Pad surface glazed
Disc warped
Caliper trouble
Master cylinder damaged

Other noise:
Bracket, nut, bolt, etc. not properly mounted or tightened

Oil Pressure Warning Light Goes On:

Engine oil pump damaged
Engine oil screen clogged
Engine oil level too low
Engine oil viscosity too low
Camshaft bearing portion worn
Crankshaft bearings worn
Oil pressure switch damaged
Oil pressure switch lead damaged
Relief valve stuck open
O-ring at the oil passage damaged

Exhaust Smokes Excessively:

White smoke:
- Piston oil ring worn
- Cylinder worn
- Valve oil seal damaged
- Valve guide worn
- Engine oil level to high

Black smoke:
- Air cleaner clogged
- Main jet too large or fallen off
- Starter plunger stuck open
- Fuel level in carburetor float bowl too high

Brown smoke:
- Main jet too small
- Fuel level in carburetor float bowl too low
- Air cleaner duct loose
- Air cleaner O-ring damaged
- Air cleaner poorly sealed or missing

Handling and/or Stability Unsatisfactory:

Handlebar hard to turn:
- Cable routing incorrect
- Hose routing incorrect
- Wiring routing incorrect
- Steering stem nut too tight
- Steering stem bearing damaged
- Steering stem bearing lubrication inadequate
- Steering stem bent
- Tire air pressure too low

Handlebar shakes or excessively vibrates:
- Tire worn
- Swingarm pivot bearings worn
- Rim warped, or not balanced
- Wheel bearing worn
- Handlebar holder bolt loose
- Steering stem head bolt loose
- Front, rear axle runout excessive

Handlebar pulls to one side:
- Frame bent
- Wheel misalignment
- Swingarm bent or twisted
- Swingarm pivot shaft bent
- Steering maladjusted
- Front fork bent
- Right and left front fork oil level uneven

Shock absorption unsatisfactory:
- (Too hard)
- Front fork oil excessive
- Front fork oil viscosity too high
- Rear shock absorber adjustment too hard
- Tire air pressure too high
- Front fork bent
- (Too soft)
- Tire air pressure too low
- Front fork oil insufficient and/or leaking
- Front fork oil viscosity too low
- Rear shock adjustment too soft
- Front fork, rear shock absorber spring weak
- Front fork oil leaking
- Rear shock absorber oil leaking

Brake Doesn't Hold:

- Air in the brake line
- Pad or disc worn
- Brake fluid leakage
- Disc warped
- Contaminated pad
- Brake fluid deteriorated
- Primary or secondary cup damaged in master cylinder
- Brake master cylinder scratched inside

Battery Trouble:

Battery discharged:
- Charge insufficient
- Battery faulty
- Battery leads making poor contact
- Load excessive (e.g., bulb of excessive wattage)
- Ignition switch trouble
- Alternator trouble
- Wiring faulty

Battery overcharged:
- Alternator trouble
- Battery faulty

General Lubrication

Lubrication

- Before lubricating each part, clean off any rusty spots with rust remover and wipe off any grease, oil, dirt, or grime.
- Lubricate the points listed below with indicated lubricant.

NOTE

○ *Perform the general lubrication in accordance with the Periodic Maintenance Chart or whenever the vehicle has been operated under wet or rainy conditions, or especially after using a high-pressure water spray.*

Pivots: Lubricate with Motor Oil.

Sidestand
Shift Pedal
Rear Brake Rod Joint

Points: Lubricate with Grease.

Throttle Inner Cable Lower Ends [A]
Choke Inner Cable Lower End [A]
Seat Lock Cable Ends [A]
Speedometer Inner Cable*
Brake Pedal
Clutch Lever**
Brake Lever**
(*): Grease the lower part of the inner cable sparingly.
(**): Apply silicone grease.

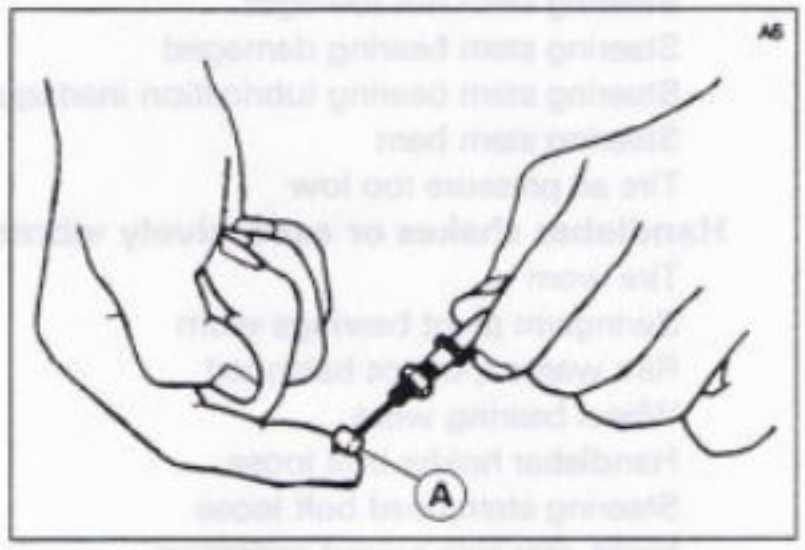

Cables: Lubricate with Cable Lubricant.

Choke Cable
Throttle Cables
Seat Lock Cable

- Lubricate the cables by seeping the oil between the cable and housing.

○ The cable may be lubricated by using a pressure cable luber [A] with an aerosol cable lubricant [B].

Special Tool – Pressure Cable Luber: K56019-021

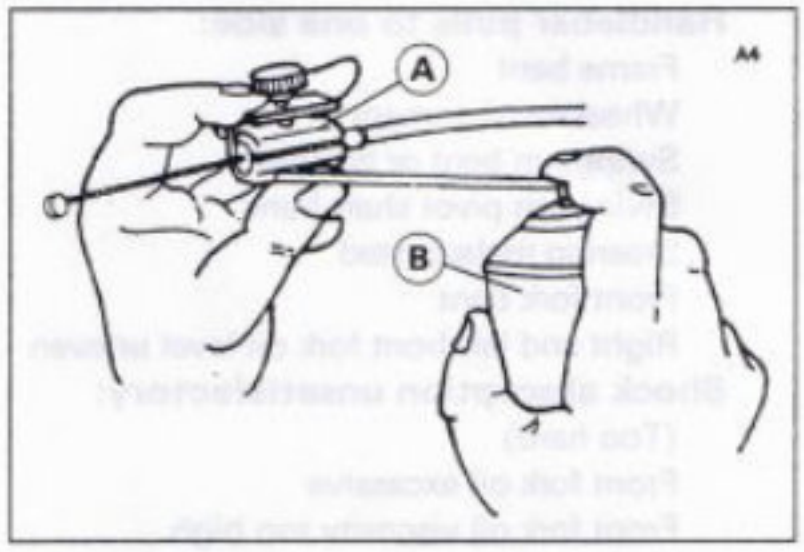

- With the cable disconnected at the both ends, the cable should move freely [A] within the cable housing.

★ If cable movement is not free after lubricating, if the cable is frayed, or if the cable housing is kinked, replace the cable.

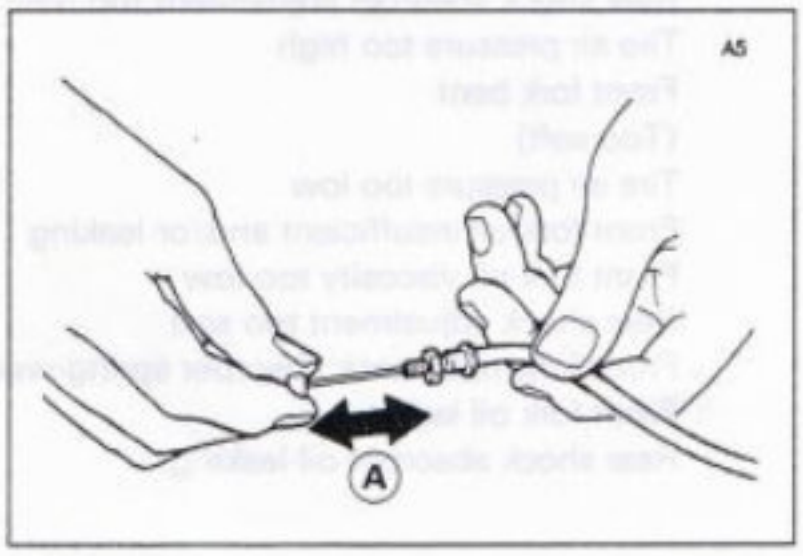

Nut, Bolt, and Fastener Tightness

Tightness Inspection

- Check the tightness of the bolts and nuts listed here in accordance with the Periodic Maintenance Chart. Also, check to see that each cotter pin is in place and in good condition.

NOTE

○*For the engine fasteners, check the tightness of them when the engine is cold (at room temperature).*

★If there are loose fasteners, retorque them to the specified torque following the specified tightening sequence. Refer to the Torque and Locking Agent section of the General Information chapter for torque specifications. For each fastener, first loosen it by 1/2 turn, then tighten it.

★If cotter pins are damaged, replace them with new ones.

Nut, Bolt and Fastener to be checked

Wheels:
- Front Axle
- Front Axle Clamp Bolts
- Rear Axle Nut

Final Drive
- Chain Adjuster Clamp Bolts
- Rear Sprocket Nuts

Brakes:
- Front Master Cylinder Clamp Bolts
- Caliper Mounting Bolts
- Rear Master Cylinder Mounting Bolts
- Brake Lever Pivot Nut
- Brake Pedal Bolt
- Brake Rod Joint Cotter Pin

Suspension:
- Front Fork Clamp Bolts
- Front Fender Mounting Bolts
- Rear Shock Absorber Mounting Bolts and Nuts
- Swingarm Pivot Nut

Steering:
- Stem Head Nut
- Handlebar Holder Bolts

Engine:
- Throttle Cable Adjuster Locknuts
- Choke Cable Adjuster Locknut
- Engine Mounting Bolts and Nuts
- Shift Pedal Bolt
- Muffler Mounting Bolts and Nuts
- Exhaust Pipe Holder Nuts
- Muffler Clamp Bolt
- Clutch Master Cylinder Clamp Bolts
- Clutch Lever Pivot Nut

Others:
- Sidestand Bolt and Nut
- Footpeg Mounting Bolts
- Downtube Bolts
- Footpeg Bracket Bolts

Unit Conversion Table

Prefixes for Units:

Prefix	Symbol	Power
mega	M	x 1 000 000
kilo	k	x 1 000
centi	c	x 0.01
milli	m	x 0.001
micro	μ	x 0.000001

Units of Mass:

kg	x	2.205	=	lb
g	x	0.03527	=	oz

Units of Volume:

L	x	0.2642	=	gal (US)
L	x	0.2200	=	gal (imp)
L	x	1.057	=	qt (US)
L	x	0.8799	=	qt (imp)
L	x	2.113	=	pint (US)
L	x	1.816	=	pint (imp)
mL	x	0.03381	=	oz (US)
mL	x	0.02816	=	oz (imp)
mL	x	0.06102	=	cu in

Units of Force:

N	x	0.1020	=	kg
N	x	0.2248	=	lb
kg	x	9.807	=	N
kg	x	2.205	=	lb

Units of Length:

km	x	0.6214	=	mile
m	x	3.281	=	ft
mm	x	0.03937	=	in

Units of Torque:

N-m	x	0.1020	=	kg-m
N-m	x	0.7376	=	ft-lb
N-m	x	8.851	=	in-lb
kg-m	x	9.807	=	N-m
kg-m	x	7.233	=	ft-lb
kg-m	x	86.80	=	in-lb

Units of Pressure:

kPa	x	0.01020	=	kg/cm²
kPa	x	0.1450	=	psi
kPa	x	0.7501	=	cm Hg
kg/cm²	x	98.07	=	kPa
kg/cm²	x	14.22	=	psi
cm Hg	x	1.333	=	kPa

Units of Speed:

km/h	x	0.6214	=	mph

Units of Power:

kW	x	1.360	=	PS
kW	x	1.341	=	HP
PS	x	0.7355	=	kW
PS	x	0.9863	=	HP

Units of Temperature:

$$\frac{9(°C+40)}{5} - 40 = °F \qquad \frac{5(°F+40)}{9} - 40 = °C$$

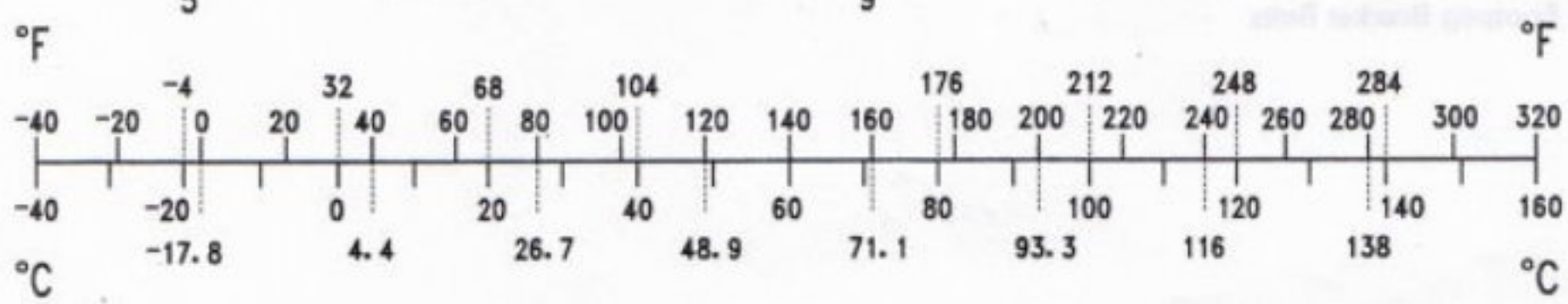

ZR1100-C Wiring Diagram (US and Canada)

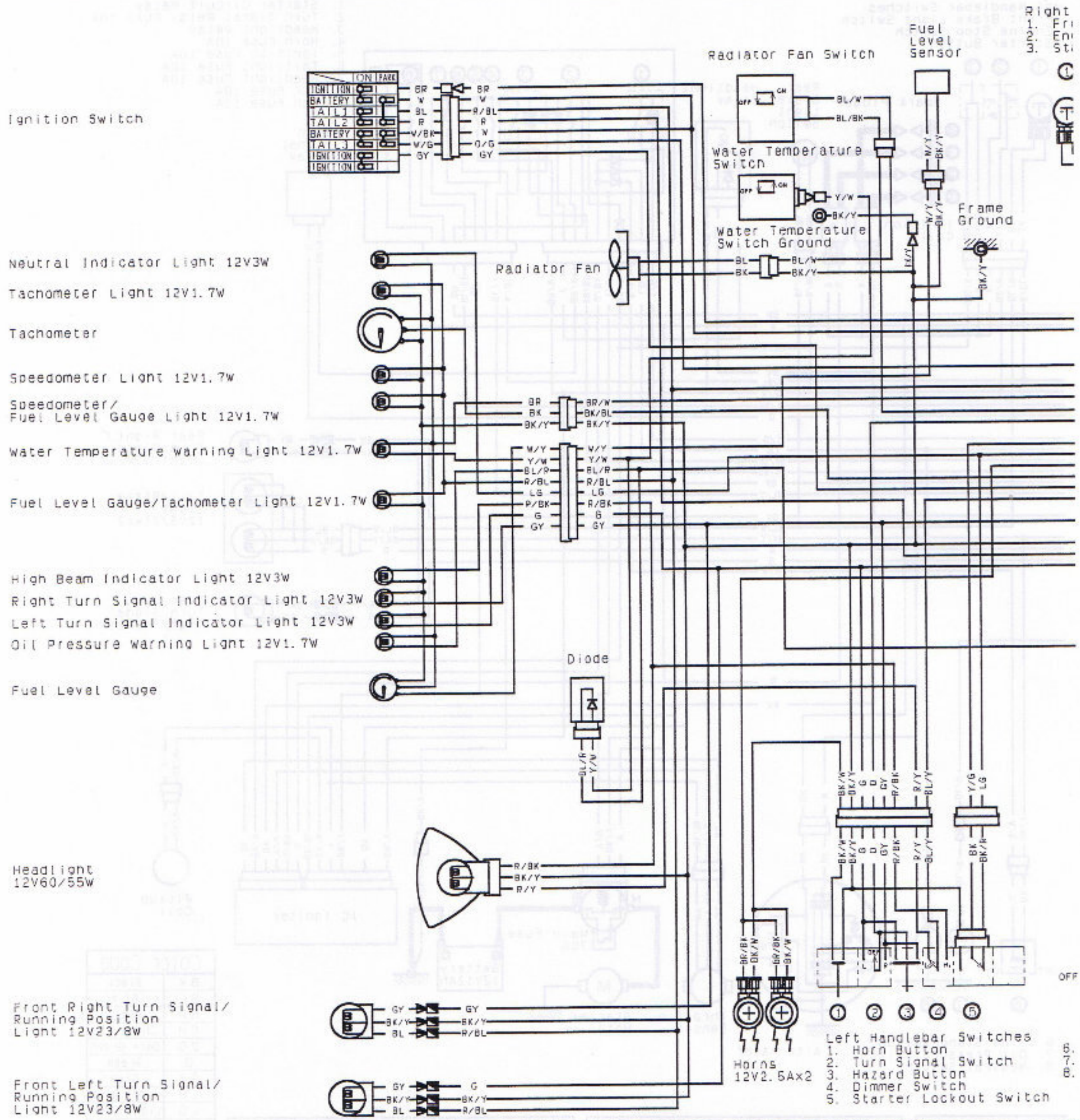

LEFT HANDLEBAR SWITCH CONNECTIONS

Horn Button			Turn Signal Switch				Hazard Button				Dimmer Switch				Starter Lockout Sw		
Color	BK/W	BK/Y	Color	G	O	GY	Color	G	O	GY	Color	R/Y	BL/Y	R/BK	Color	BK/Y	BK
			L	●							HI		●		Clutch Lever		
Push	●		OFF(Push)				Push	●	●	●					Released		●
			R		●		OFF(Push)				LO	●			Pulled in	●	

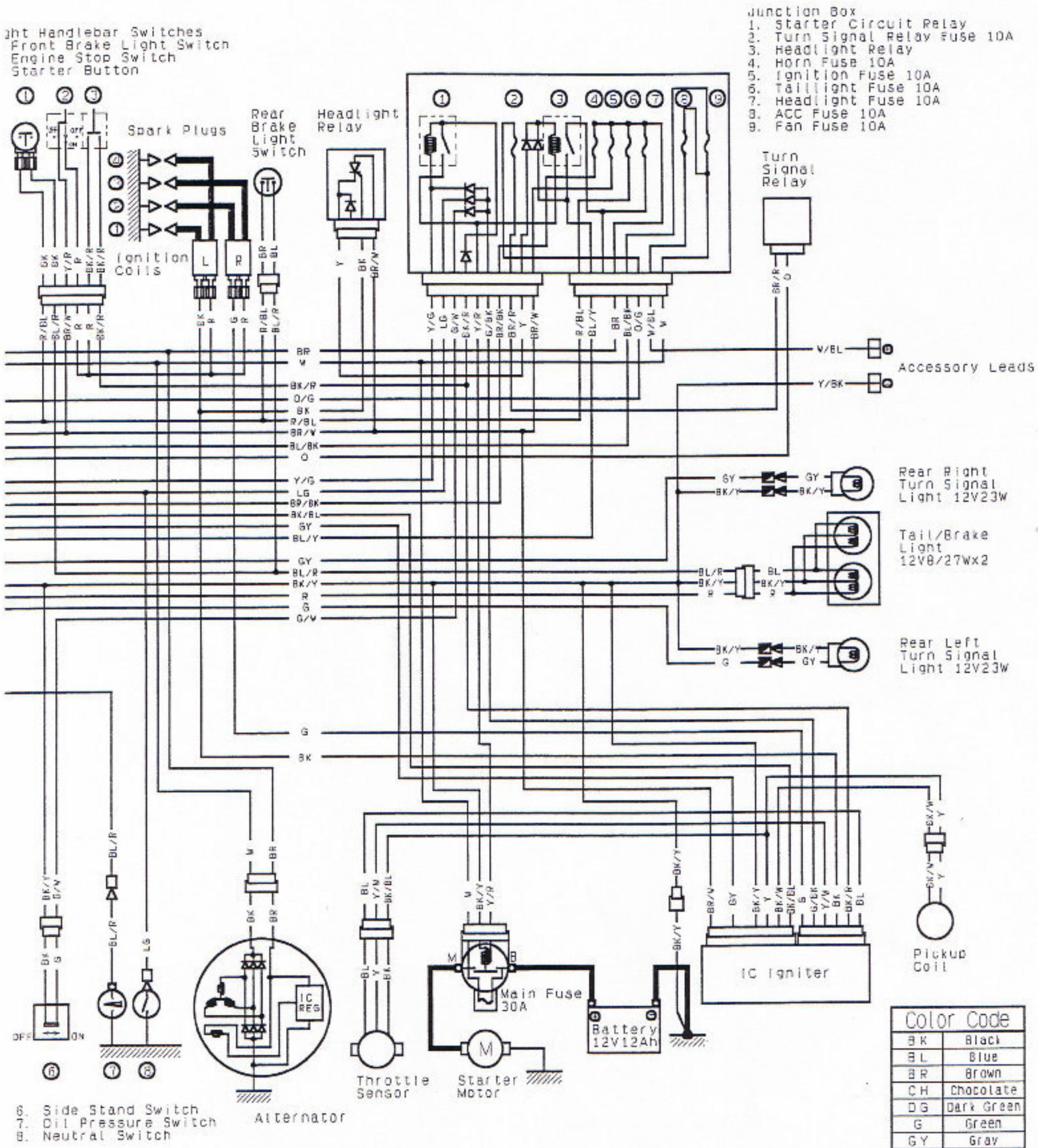

Color Code	
BK	Black
BL	Blue
BR	Brown
CH	Chocolate
DG	Dark Green
G	Green
GY	Gray
LB	Light Blue
LG	Light Green
O	Orange
P	Pink
PU	Purple
R	Red
W	White
Y	Yellow

t Switch		
BK	BK/R	

IGNITION SWITCH CONNECTIONS

	Ignition	Battery	Tail1	Tail2	Battery	Tail3	Ignition	Ignition
Color	BR	W	BL	R	W/BK	W/G	GY	-
OFF, LOCK								
ON	●		●	●	●		●	
P(Part)		●	●	●	●			

RIGHT HANDLEBAR SWITCH CONNECTIONS

Front Brake Light Switch			Engine Stop Switch			Starter Button		
Color	BK	BK	Color	Y/R	R	Color	BK/R	BK/R
Brake Lever			OFF					
Pulled In	●		RUN	●		Push	●	

(98051-1789A)

ZR1100-C/D Wiring Diagram (Europe)

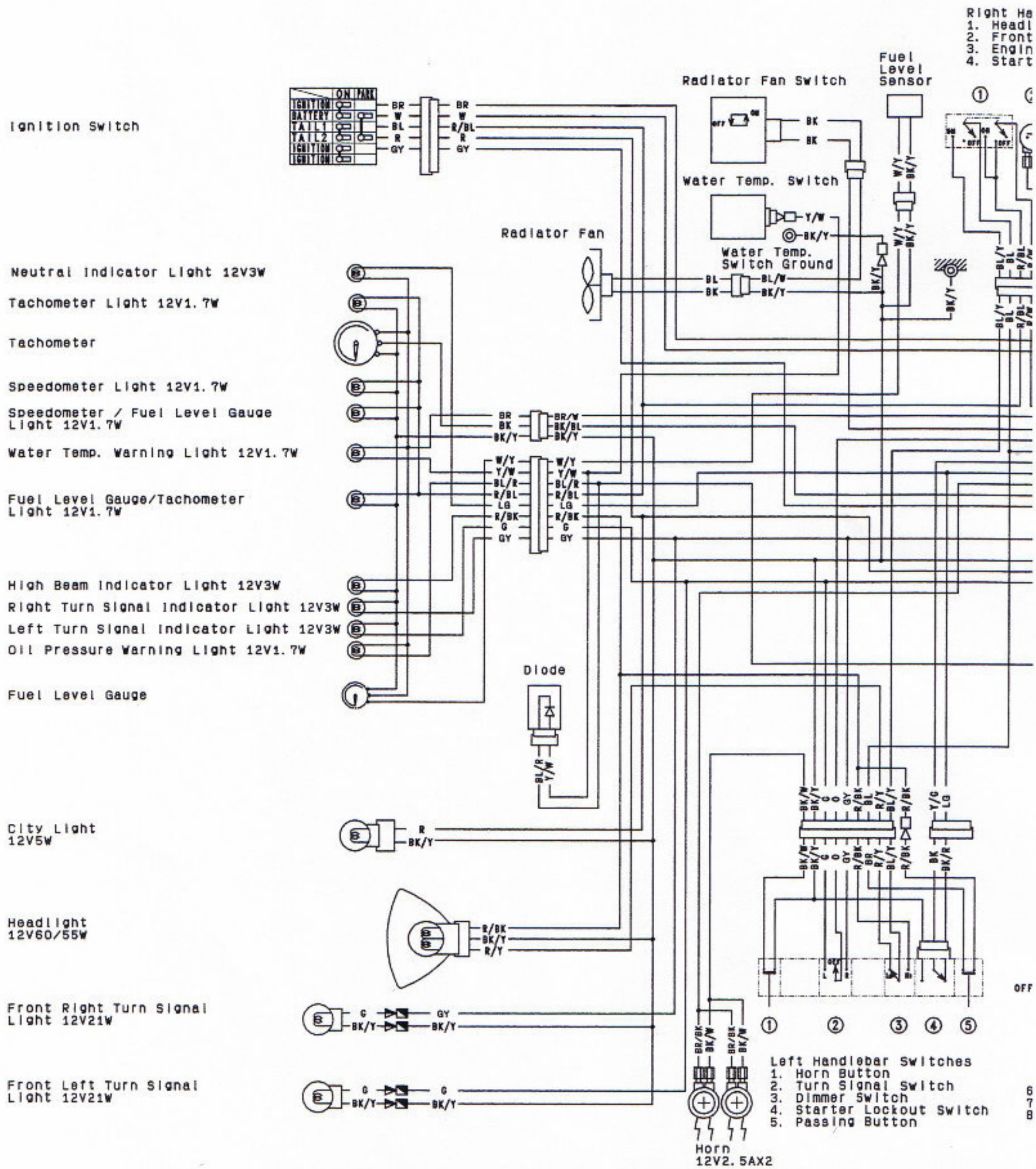

LEFT HANDLEBAR SWITCH CONNECTIONS

Horn Button			Turn Signal Switch				Dimmer Switch				Starter Lockout Switch				Passing Button		
Color	BK/W	BK/Y	Color	G	O	GY	Color	R/Y	BL/Y	R/BK	Color	BK/Y	BK	BK/R	Color	BR	R/BK
Push	○—●		R		○—●		LO	○—●			Clutch Lever				Push	○—●	
Released			OFF(Push)								Released		○—●		Released		
			L	○—●			HI		○—●		Pulled In	○—●					

IGNITION

	Ignition	B
Color	BR	
OFF, LOCK		
ON	○—●	
P(PARK)		

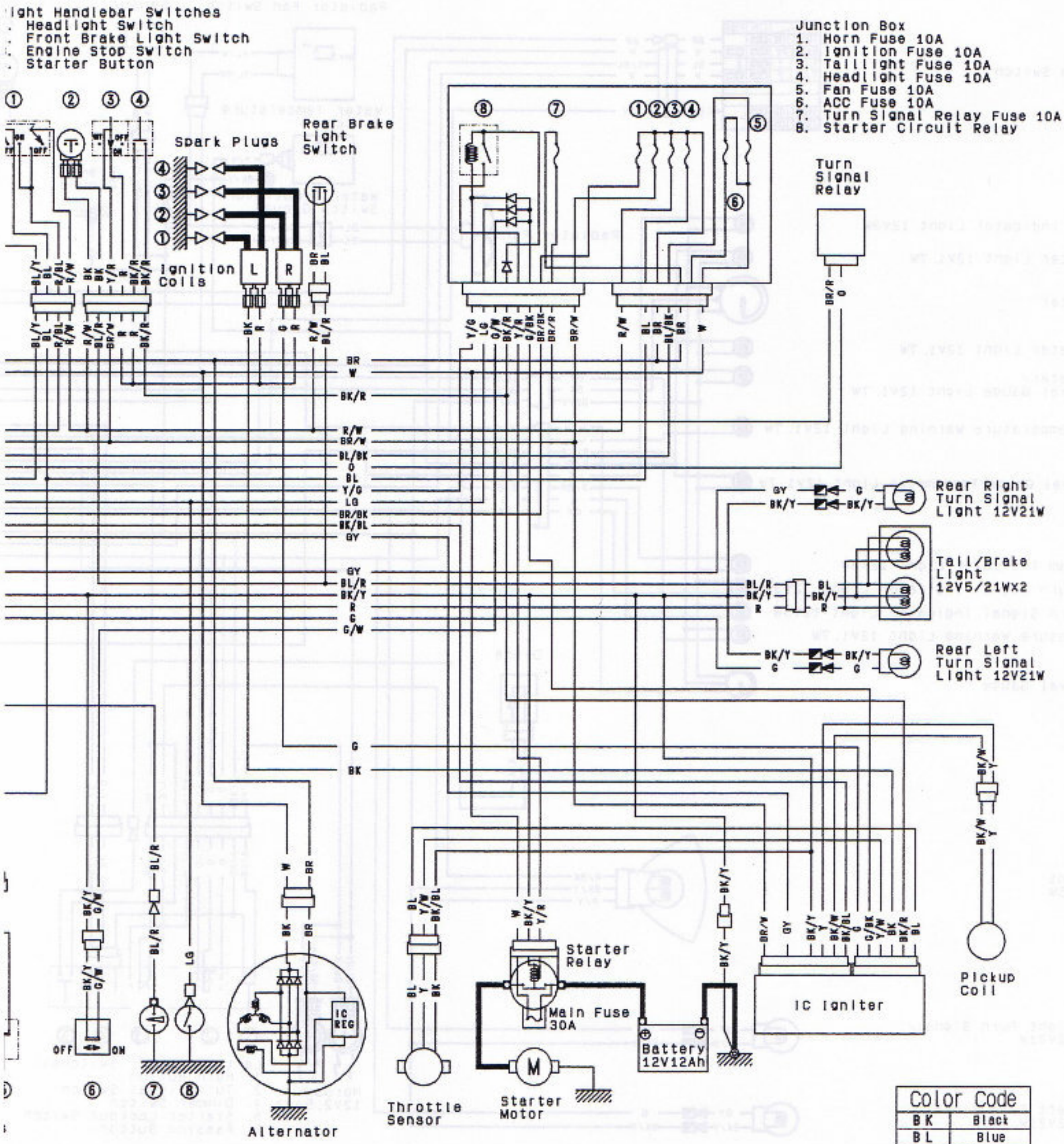

ZR1100-C Wiring Diagram (Australia)

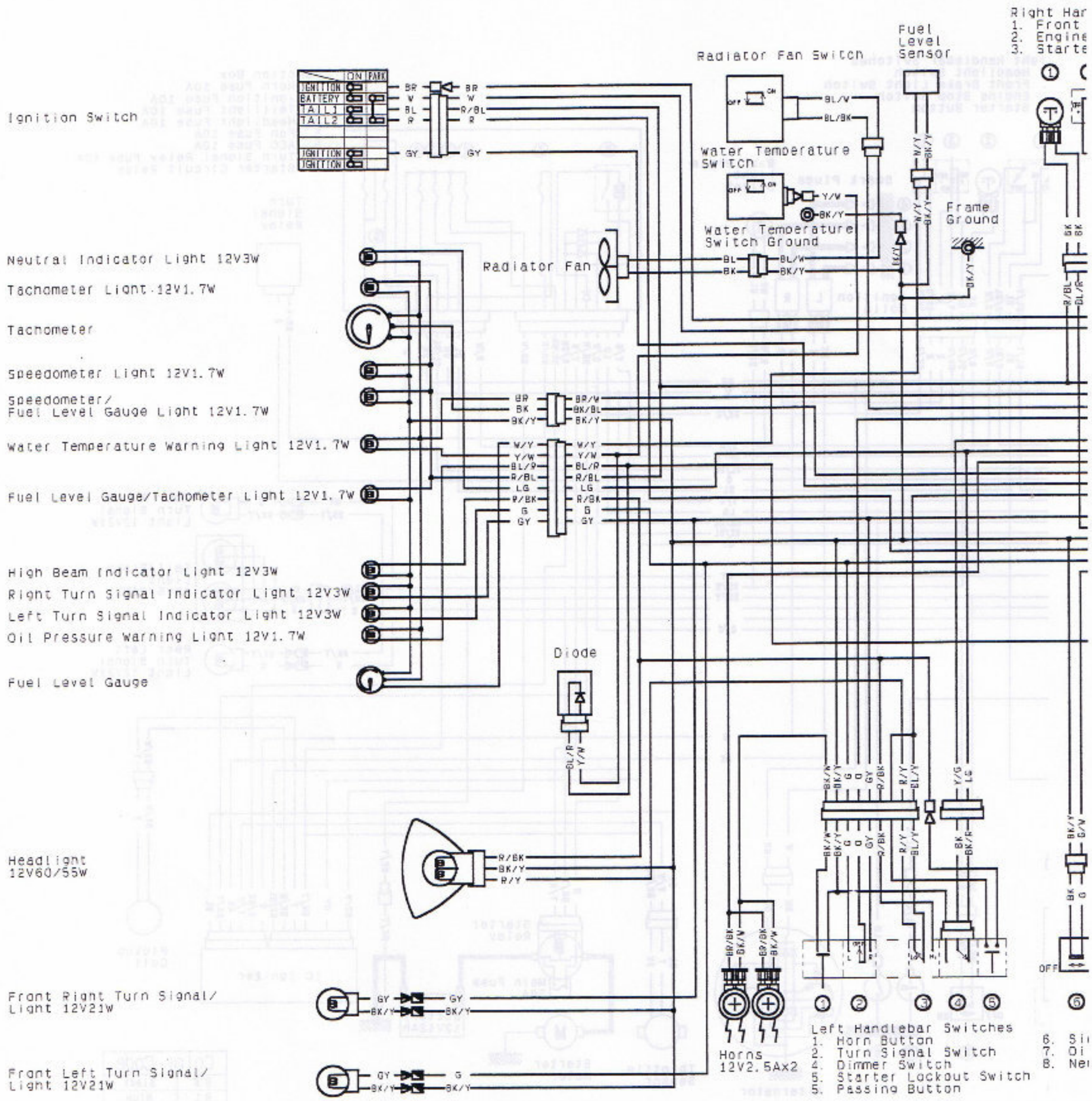

LEFT HANDLEBAR SWITCH CONNECTIONS														
Horn Button			Turn Signal Switch				Passing Button			Dimmer Switch				Starter L
Color	BK/W	BK/Y	Color	G	O	GY	Color	BR	R/BK	Color	R/Y	BL/Y	R/BK	Color
			L	●						HI		●		Clutch Lever
Push	●		OFF(Push)				Push	●						Released
			R		●		OFF(Push)			LO	●			Pulled in

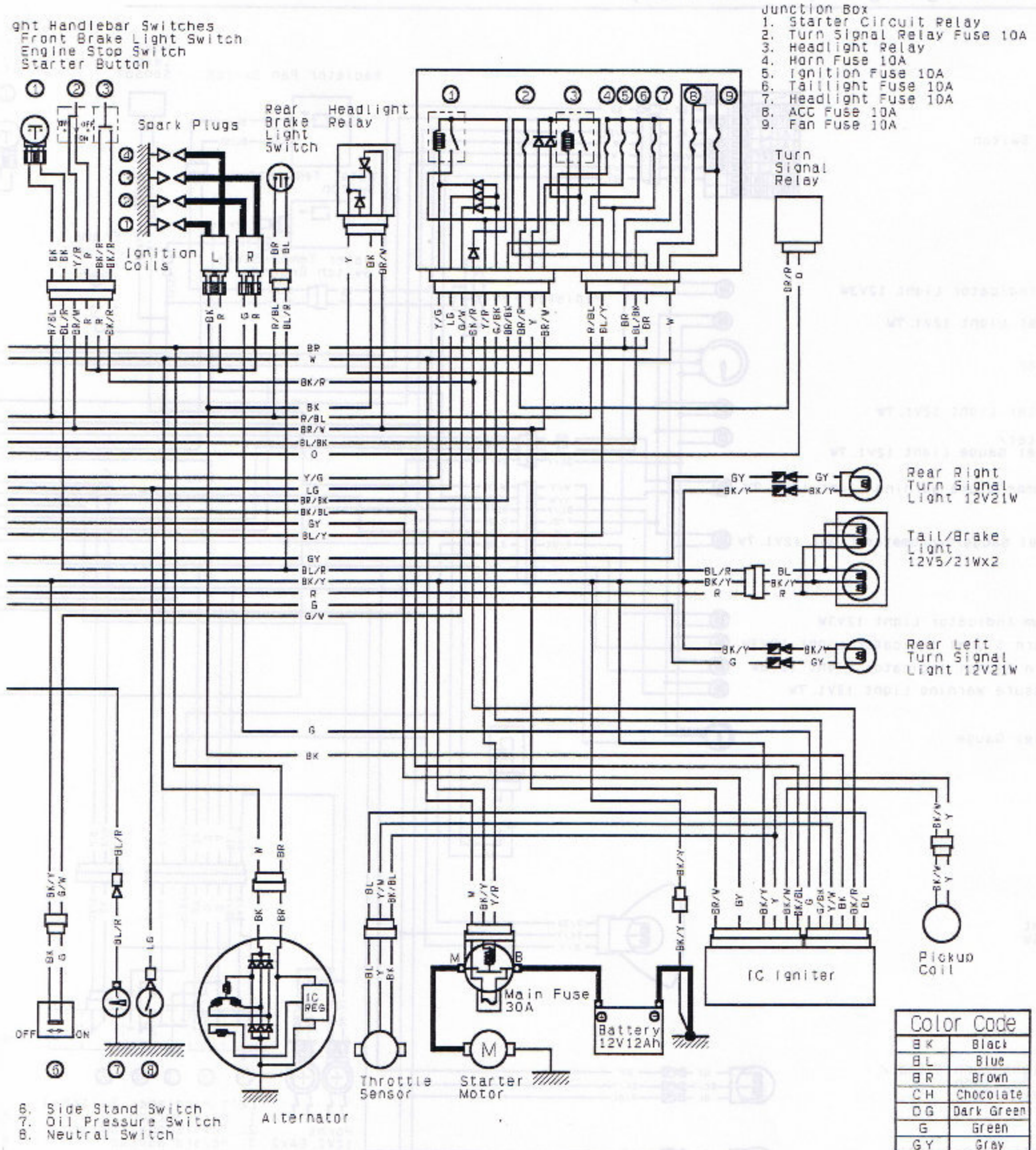

Color Code	
BK	Black
BL	Blue
BR	Brown
CH	Chocolate
DG	Dark Green
G	Green
GY	Gray
LB	Light Blue
LG	Light Green
O	Orange
P	Pink
PU	Purple
R	Red
W	White
Y	Yellow

Starter Lockout Switch			
Color	BK/Y	BK	BK/R
Clutch Lever			
Released		●	●
Pulled in	●	●	

IGNITION SWITCH CONNECTIONS						
	Ignition	Battery	Tail1	Tail2	Ignition	Ignition
Color	BR	W	BL	R	GY	-
OFF, LOCK						
ON	●	●	●	●	●	●
P(Part)		●	●	●		

RIGHT HANDLEBAR SWITCH CONNECTIONS								
Front Brake Light Switch			Engine Stop Switch			Starter Button		
Color	BK	BK	Color	Y/R	R	Color	BK/R	BK/R
Brake Lever			OFF					
Pulled in	●	●	RUN	●	●	Push	●	●

(98051-1826A)